Techniques for improving reliability of DNN algorithms and accelerators

Sparsh Mittal

Background topics

Radiation hardening

- Making electronic components resistant to damage caused by high-energy electromagnetic radiation.
- E.g., using 8T SRAM instead of 6T SRAM.
  - Higher area, latency and leakage power
  - 6T size: 0.64μm^2, 8T size: 0.832μm^2

Read failure probability at 65nm

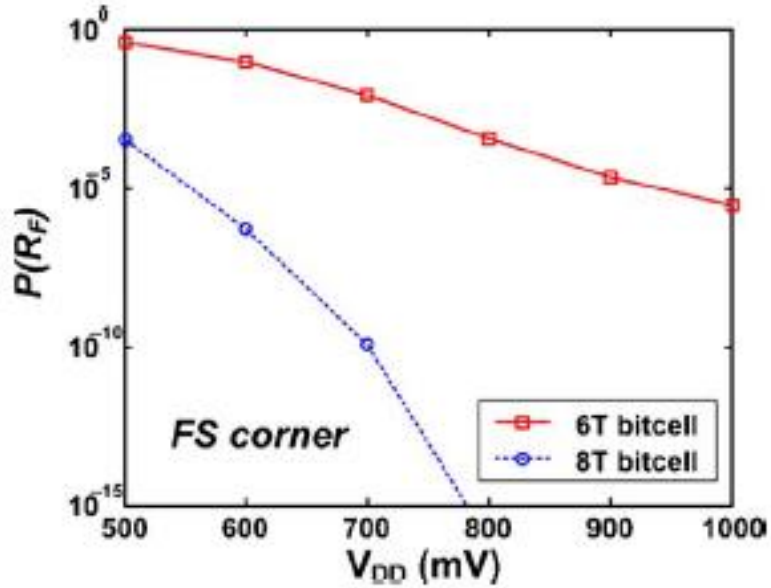

Low-voltage-tolerant circuits

- 7T, 8T and 10T SRAM cells show much lower failure rate than traditional 6T SRAM => useful at low voltage

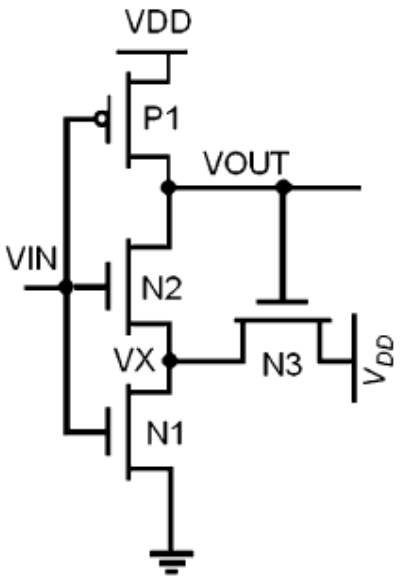

Schmitt trigger-based 10T SRAM

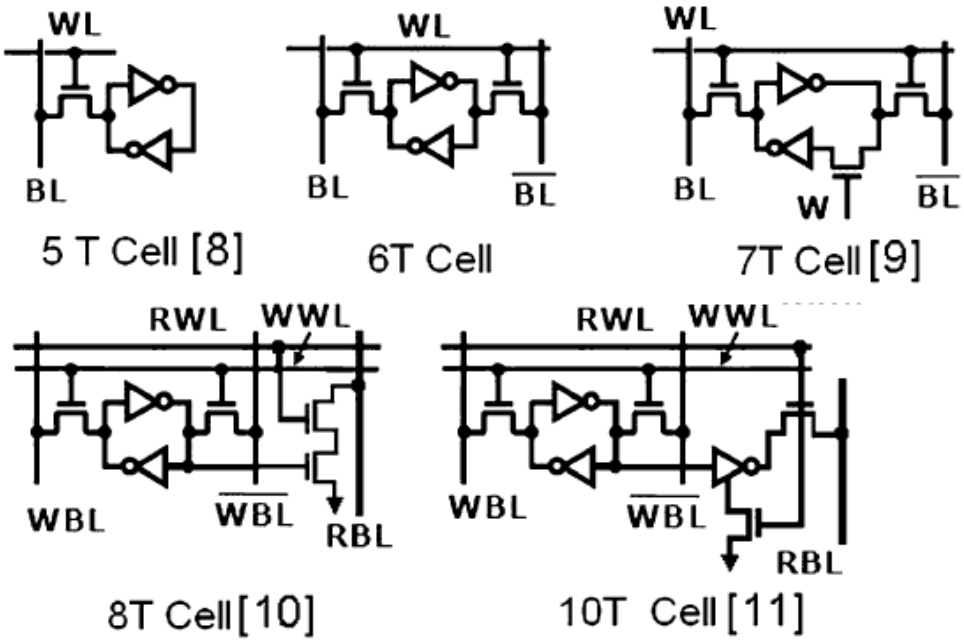

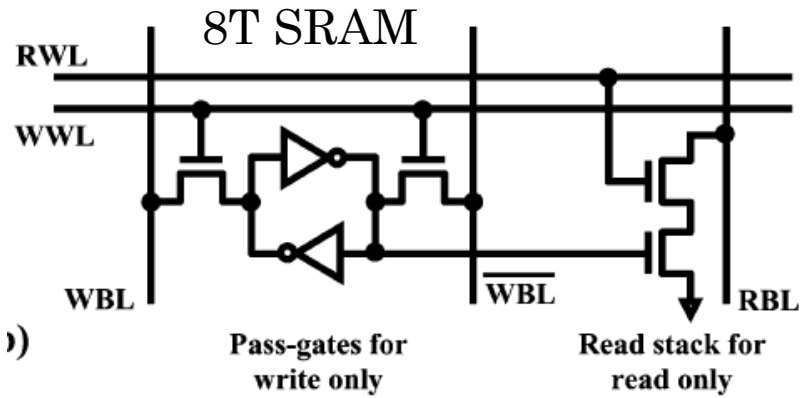

Sparsh Mittal, IIT Roorkee

Kulkarni et al. JSSC'07, Chang et al. JSSC'08

Operating voltage range in processors over time

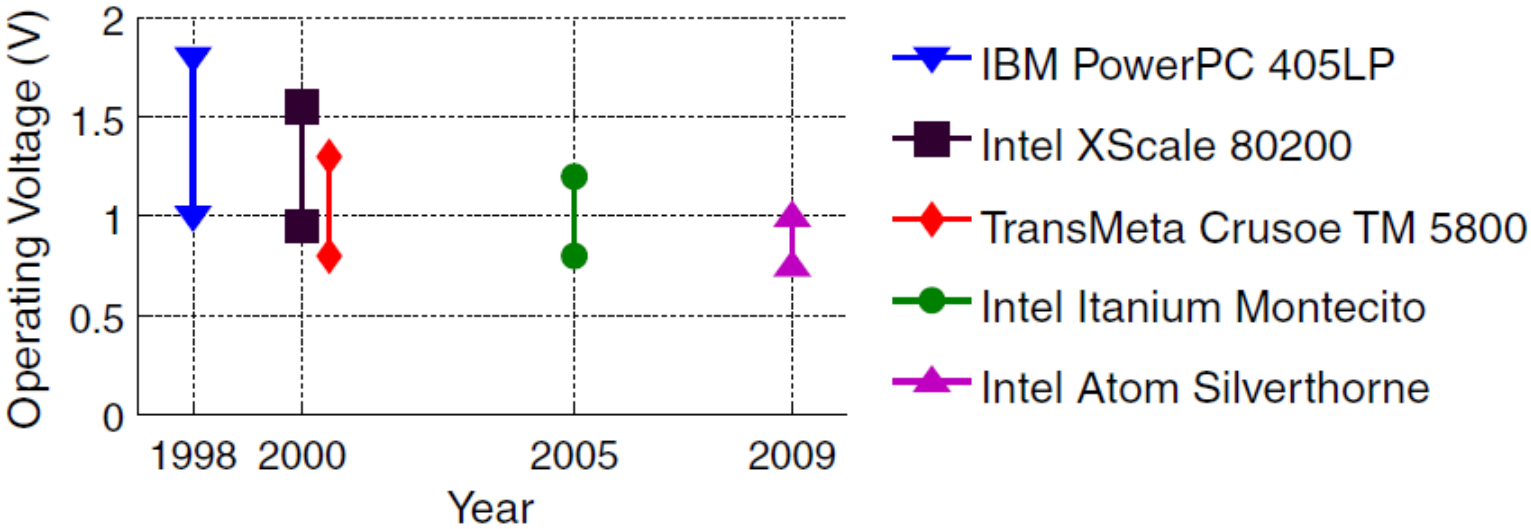

Watanabe et al. ISCA'10

Triple modular redundancy

- 3 systems perform a process. That result is processed by a majority-voting system. If a single system fails, other two systems can correct and mask the fault.

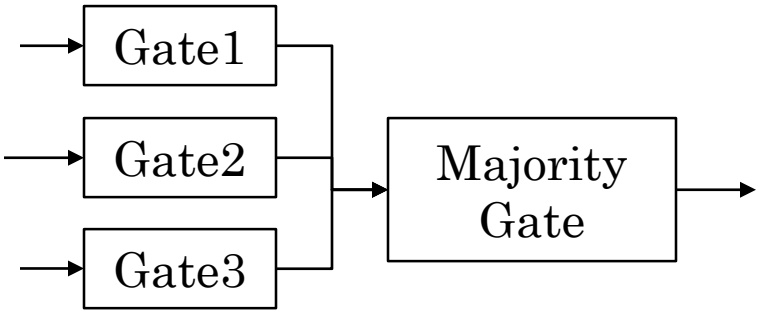

Impact of DRAM refresh rate

- In DRAM, on using normal refresh rate (one refresh every 64ms), all cells retain data.
- On using lower refresh rate (e.g., refreshing every 128ms), some cells lose their data.

Contents

- Criticality-aware protection
- Value-range aware protection
- Working with faulty hardware
- Managing thermal issues in Hybrid DNNs
- Approximate computing

Criticality-aware protection

Motto: Store components with higher criticality in regions with stronger protection or less error-rate

Summary of ideas for criticality-aware protection

- Map more resilient neurons to less reliable hardware
- Store MSB in DRAM regions with normal refresh rate, LSB in DRAM regions with lower refresh rate
- Store more critical bits in resilient dies of 3D DRAM
- Perform radiation-hardening of only MSBs of fixed-point data
- Use TMR only in the most vulnerable layers of a NN

TMR = triple modular redundancy

Heterogeneous cache architecture

(a)	6T	6T	6T	6T	6T	6T	6T	6T	(8+0) configuration (baseline)
(b)	6T	6T	6T	6T	6T	10T	10T		(5+2) configuration (iso-area)
(c)	6T	6T	6T	6T	6T	6T	6T	10T	(7+1) configuration (iso-capacity)

Maric et al. GLSVLSI'12

Heterogeneous memory for eHealth monitoring system

- **Observation:** Memory requirement of eHealth monitoring system varies in different phases
  - Sensing phase: memory needs to be just sufficient for storing sampled data
  - Compression phase: larger memory required for computation and temporary storage
- **Technique:** Use 6T-8T SRAM hybrid memory
- Sensing phase: voltage = 600mV. Only 8T banks are activated. 6T banks remain idle in data-retentive mode
- Compression phase: voltage = 1.2V. Both 6T and 8T banks are activated to provide higher performance

Bortolotti et al. DATE'14

6T-8T hybrid memory for approximate computing

- **Observation**: Human eye is sensitive to higher order bits of luminance pixels in video data
- **Technique:** Store higher order luma bits in robust 8T bitcells and lower order bits in 6T bitcells
- On voltage scaling, luma bits in 8T bitcells remain unaffected
- Fault in 6T bitcells => little effect on output quality

- Hybrid memory provides larger energy saving than 6T-only memory

Chang et al. TCSVT'11

Using Variable-strength ECC

- **Observation:** Probability of multi-bit errors in a cache line is much smaller than that of zero/single-bit errors
- **Technique:** Use variable-strength ECC
  - Simple and fast ECC for lines with zero or one failures
  - Strong but slow ECC for lines with multi-bit failures
- Only few lines need such strong ECC => total overhead low

- For same protection, this technique incurs lower overhead than fixed-strength ECC schemes

Different protection levels at different voltages

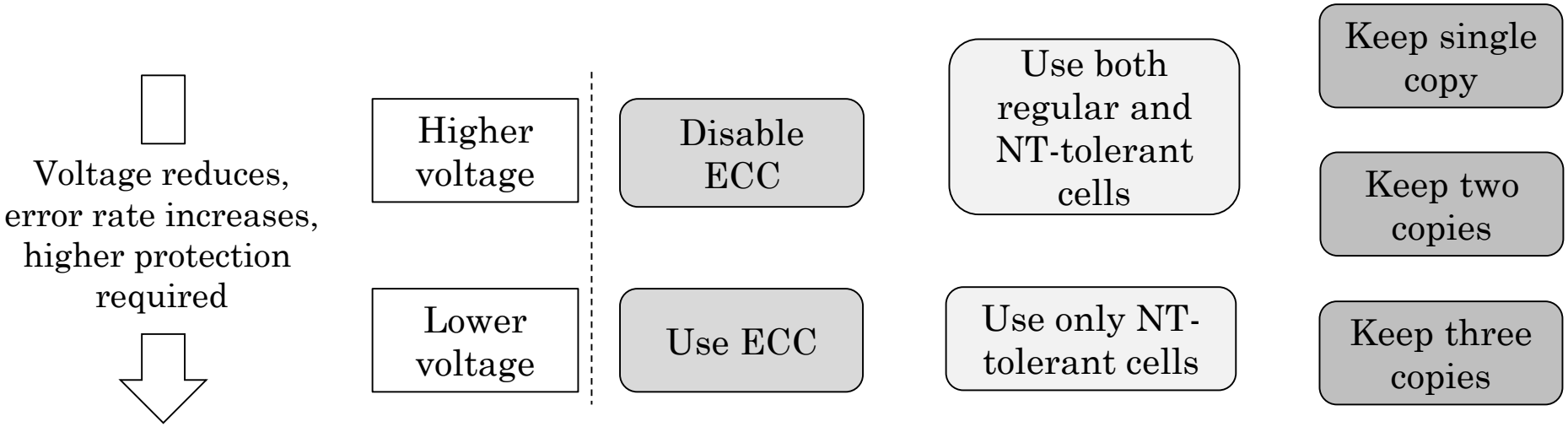

Using ECC of different strengths

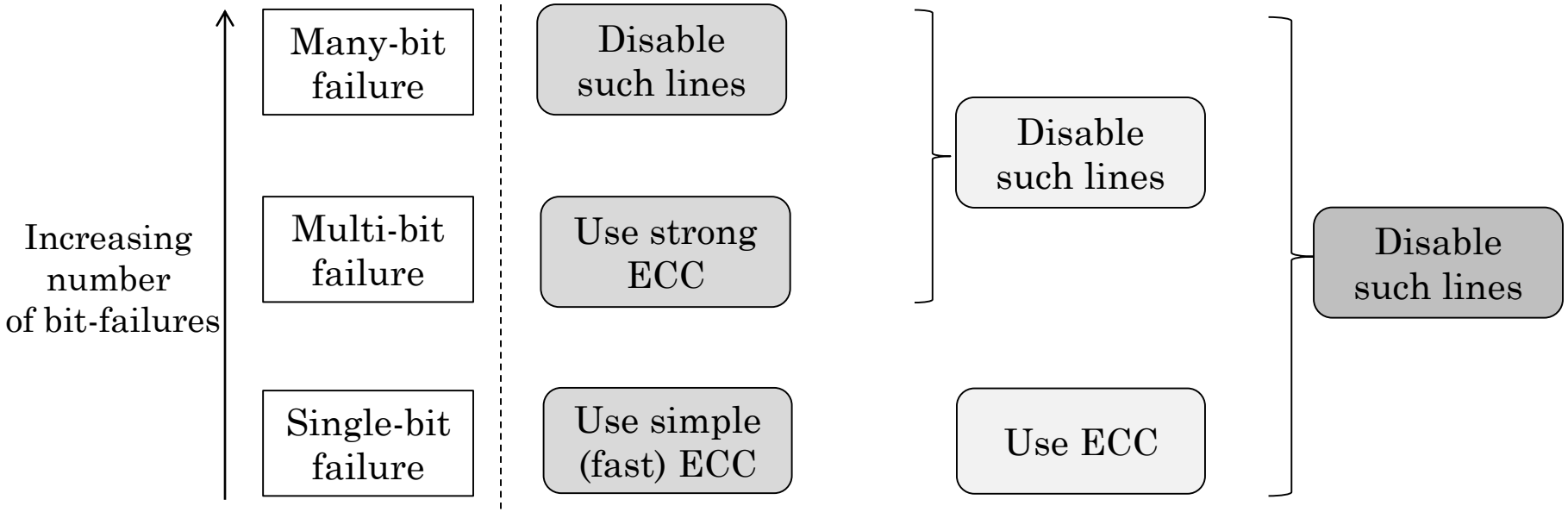

Reliability profile of stacked memory

- **Top-most die**: has high SE rate due to alpha particles arising from upper packaging material
- **Bottom-most die**: has high SE rate due to the heat released from the interposer and logic die

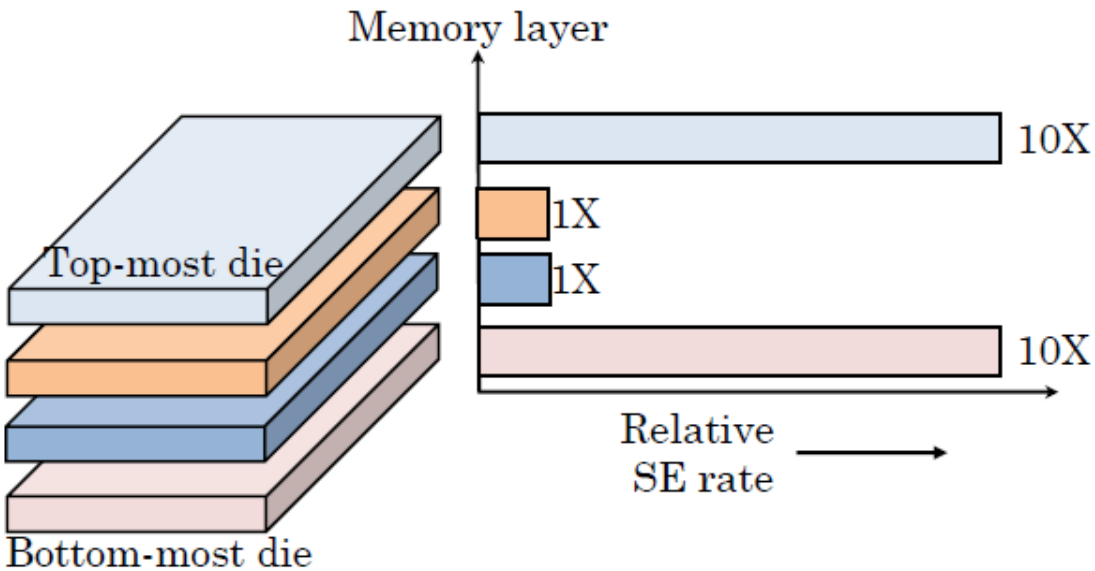

Final SE rate profile

SE = soft-error

Kim et al. DAC 2019

Metric for estimating error resilience of neurons

- Consider a neuron that makes a small contribution to the DNN output
- A change in its output has small impact on final accuracy.
- ➔ Resilience of a neuron is correlated with its average contribution to the output
- Low contribution implies high error resilience and vice versa.

Schorn et al. DATE 2018

Neuron average error maps in MNIST

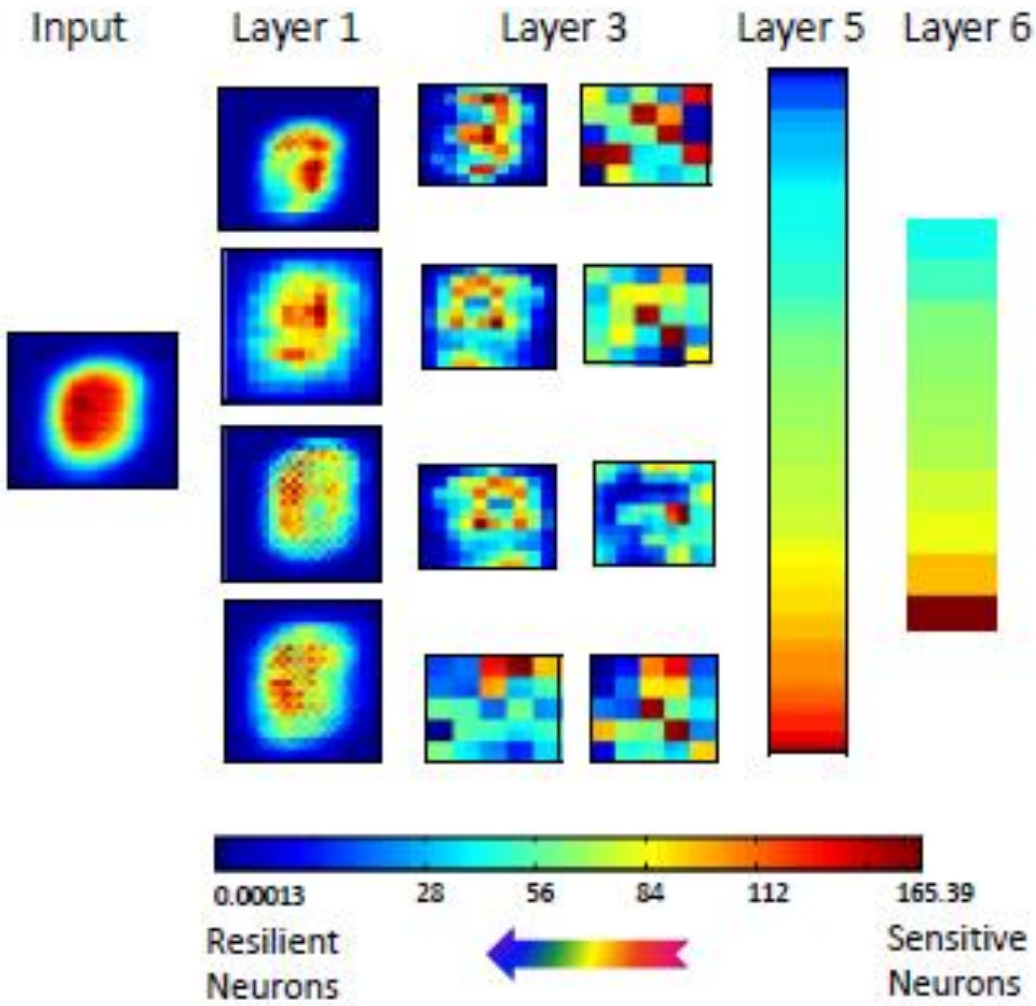

Quantifying Neuron resilience

- More the number of neurons in a layer, the less amount of information each neuron contributes.
- Average resilience over all the neurons of a layer is equal to the number of neurons in that layer.

$$\frac{1}{J}\sum_{j=0}^{J-1} r_{i,j} = J.$$

- Observation: the neuron with the highest resilience has the lowest priority to receive protection

Schorn et al. DATE 2018

Resilience-aware protection architecture

- Map neurons with high resilience to normal PEs, which may not be fully reliable or exact
- Map neurons with least resilience to PEs protected using ECC/redundancy, and their results are stored in protected on-chip/off-chip memory.

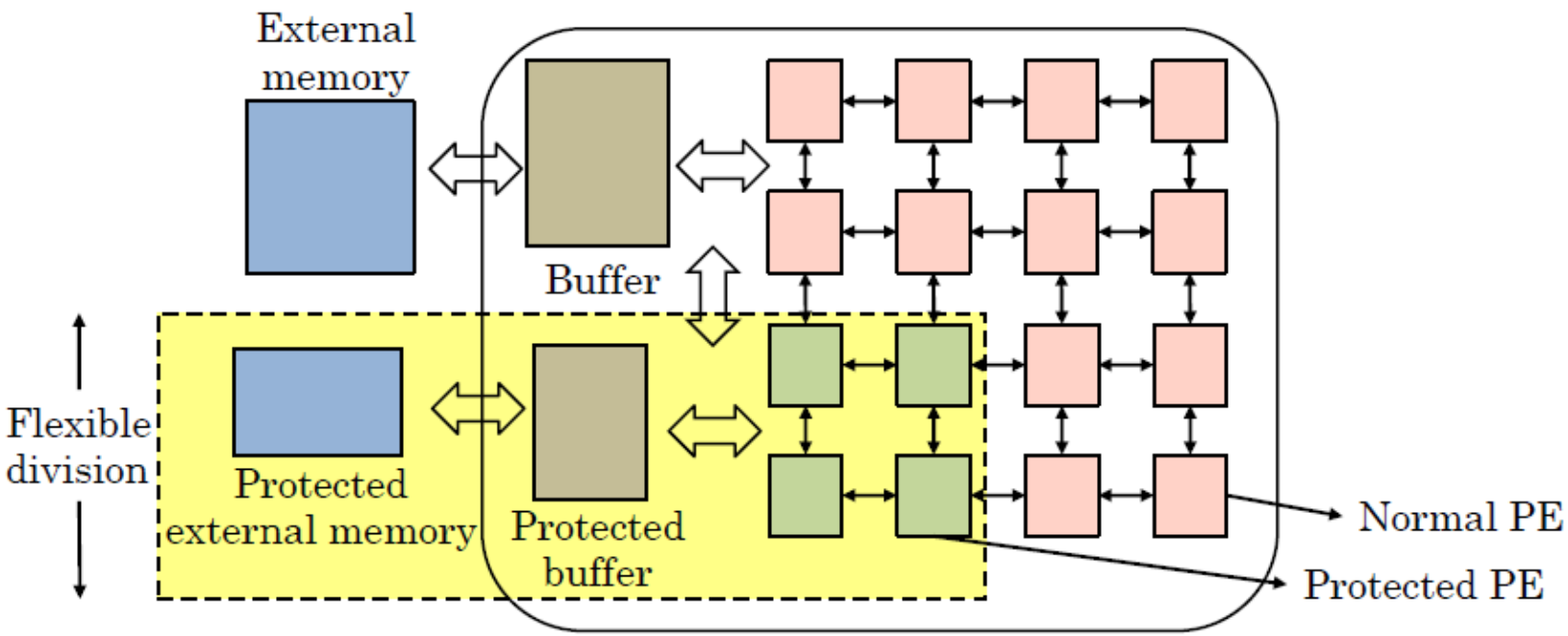

Schorn et al. DATE 2018

Higher vulnerability of memory than logic (1/2)

- Low-voltage affects memory more than logic elements
  - since memory is optimized for area
- Failure rate of SRAM structures rises steeply at low-voltage => limits extent of voltage scaling in processor

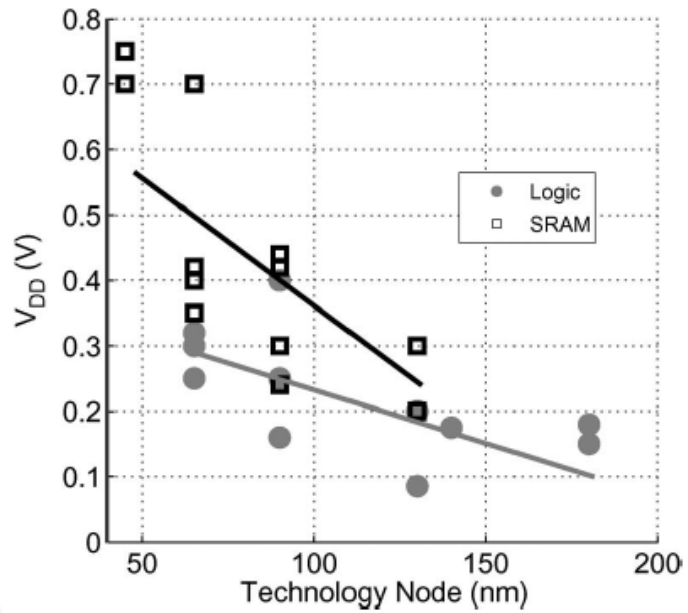

Minimum reported Vdd for recent designs

Chandrakasan et al, PIEEE'10

Higher vulnerability of memory than logic (2/2)

- Solution: use different voltage islands for logic and memory: operate core at lower voltage, cache at higher voltage
- Limitation:
- Requires voltage-level converters, which
  - take area,
  - have suboptimal power efficiency
  - take hundreds of cycles to change voltage

Value-range aware protection

These techniques work based on the following observation:
Magnitude of fault-free weights are generally small

Finding typical range of fault-free values

- The typical values of weights/activations of a DNN are in a fixed range.
- By recording this range in the fault-free execution, during faulty execution, incorrect values can be identified as those that lie above this range

Reduce magnitude of faulty weight by using fixed-point datatype

- Compared to floating-point datatype …
- …use of fixed-point datatype with a small number of integer bits reduces the error-rate by clipping the magnitude of faults

Difference in 0 → 1 and 1 → 0 flips

- A 0→1 flip increases the magnitude of the weight
- ➔ unduly high activation produced by the faulty weight value overrides the remaining activations.

- Hence, a 0→1 flip has a much higher impact on accuracy than a 1→0 flip.

Reduce the magnitude of faulty weight by masking

- Word masking: on an error, put the weight value to 0
- Bit-masking: mask the faulty bit with sign bit. reduces the magnitude of a faulty weight by virtue of rounding a faulty bit position towards zero.

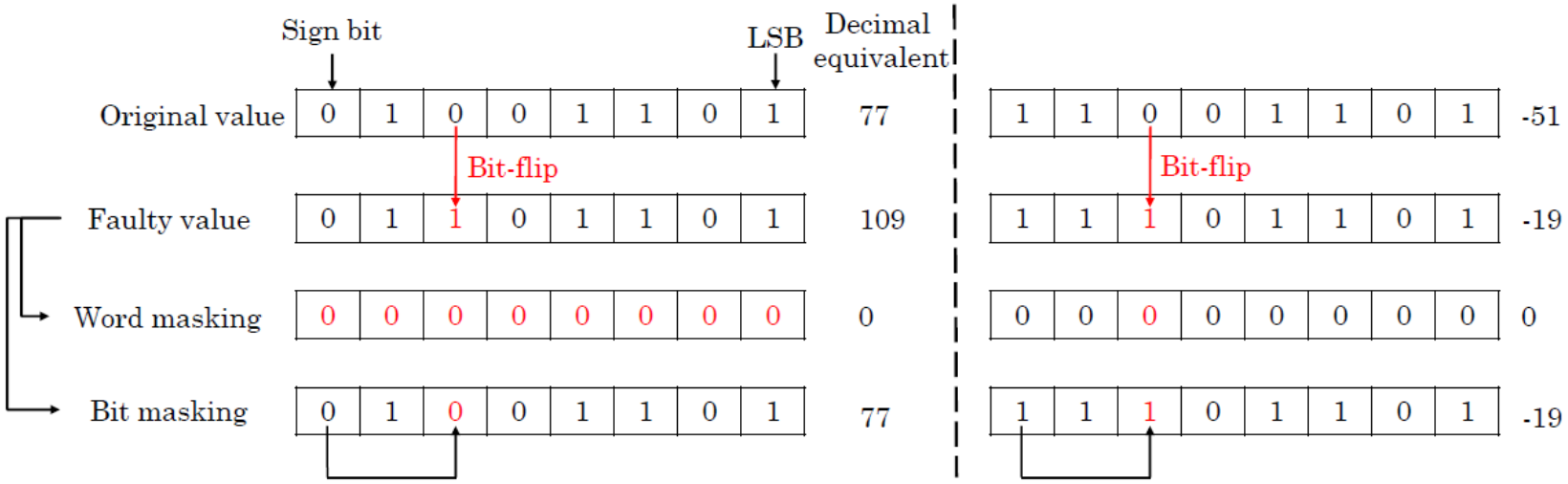

(a) Example of a positive number

(b) Example of a negative number

Reagen et al. ISCA 2016

Challenges of bit-masking scheme

- It offers no protection to the sign-bit.
- Since other bits are masked with the sign-bit, a fault in the sign-bit can propagate to other bits, leading to a large amount of error.

Working with faulty hardware

Using Redundancy

- Increase number of processing resources

8-wide+2-spare system

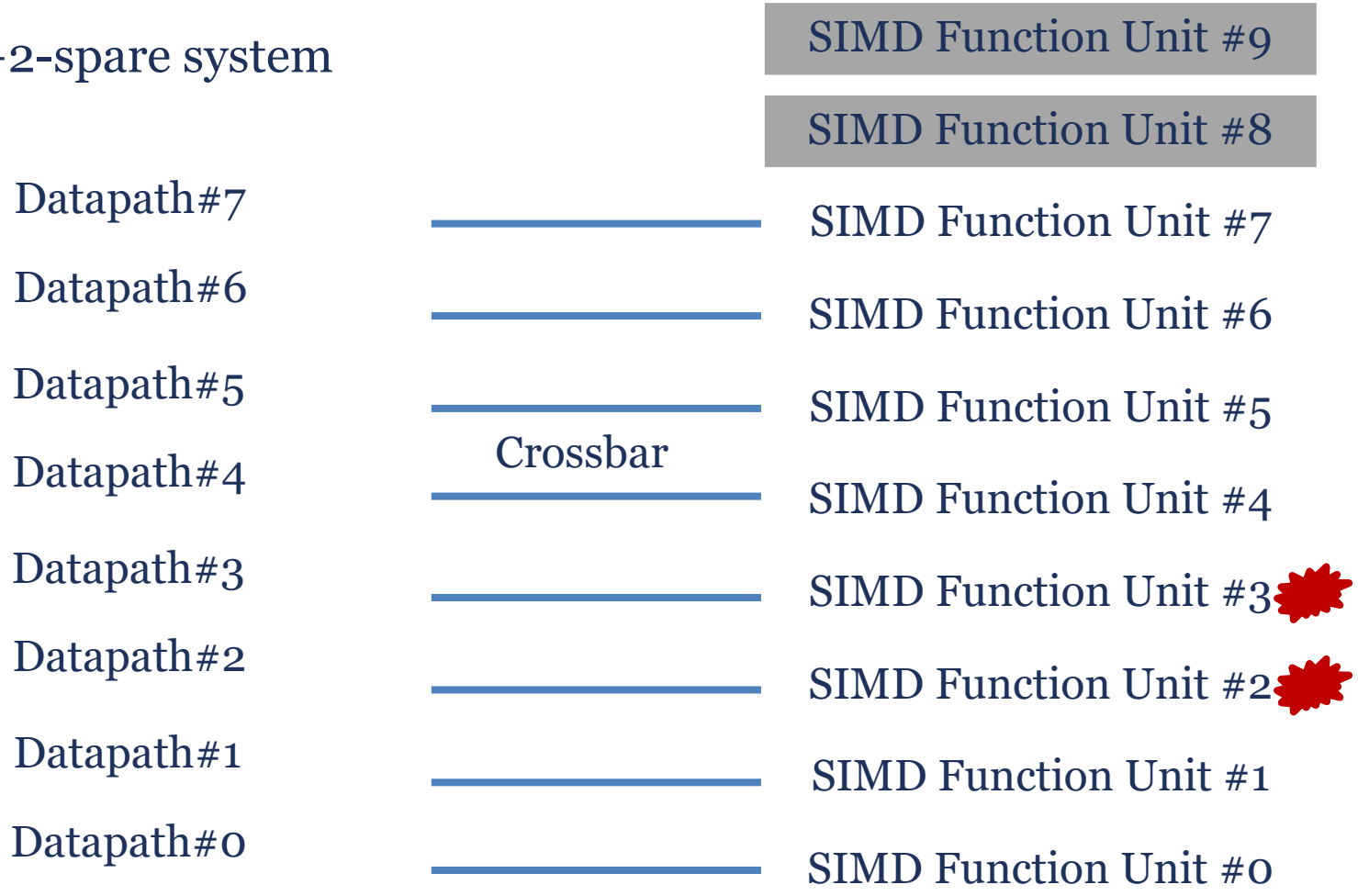

Using Redundancy

- Use the spares if required

8-wide+2-spare system

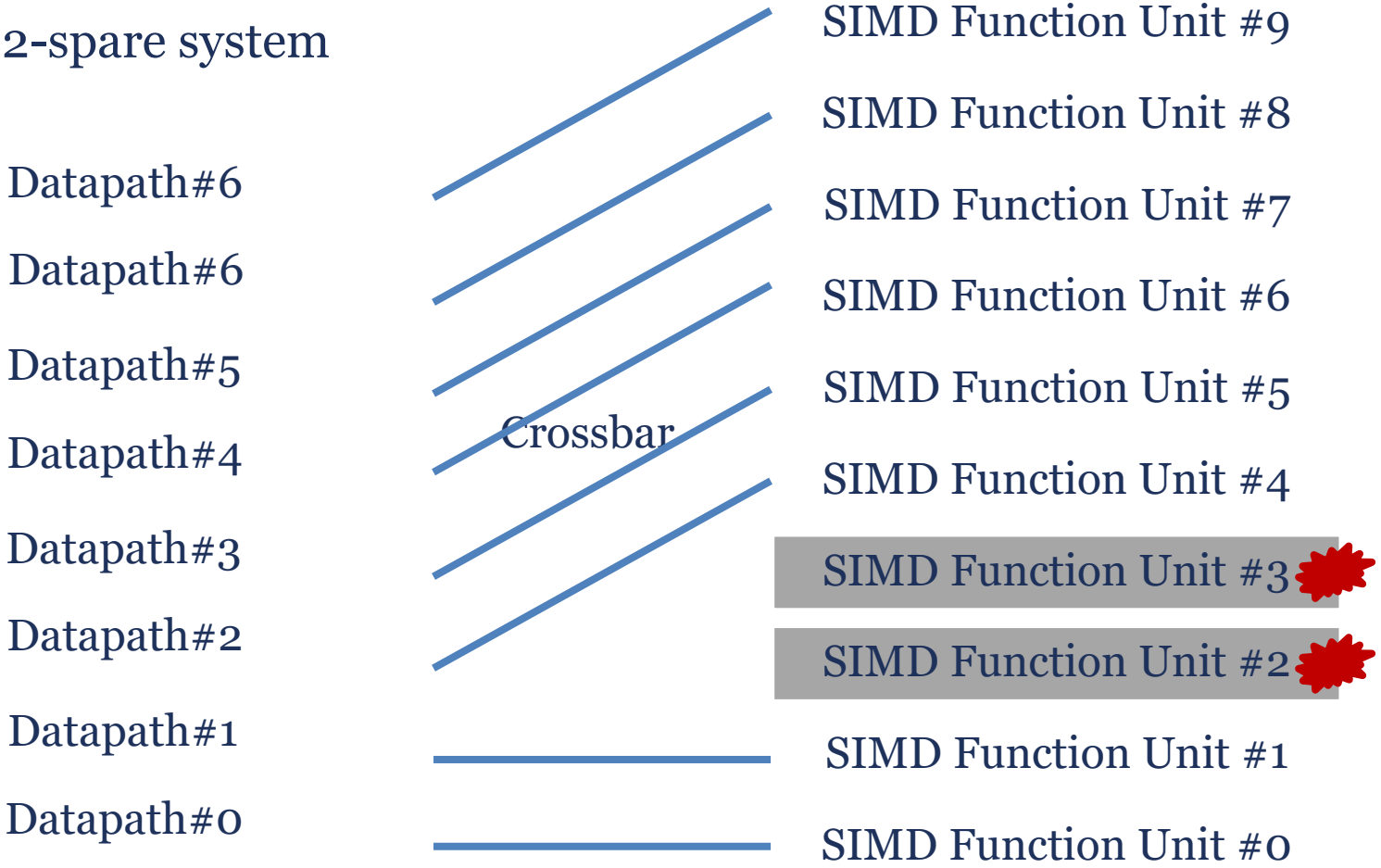

Bypassing faulty MACs

- They study permanent faults in data-path
- **Observation:** accuracy of TPU drops greatly even when four out of 64K MACs of TPU are faulty.
- **Reason:** faults change the higher bits of MAC output and hence, the faulty outputs are typically much larger than the correct outputs
- **Technique 1**: The mapping between DNN weights to MAC units is fixed in TPU
- Hence, their first technique prunes any weight mapped to a faulty MAC unit.

TPU=tensor processing unit

Zhang et al. VTS 2018

Bypassing faulty MACs

- This is achieved by adding a bypass route around the faulty MAC unit.
- On enabling of this route, the value of the faulty MAC is not accounted in the column sum

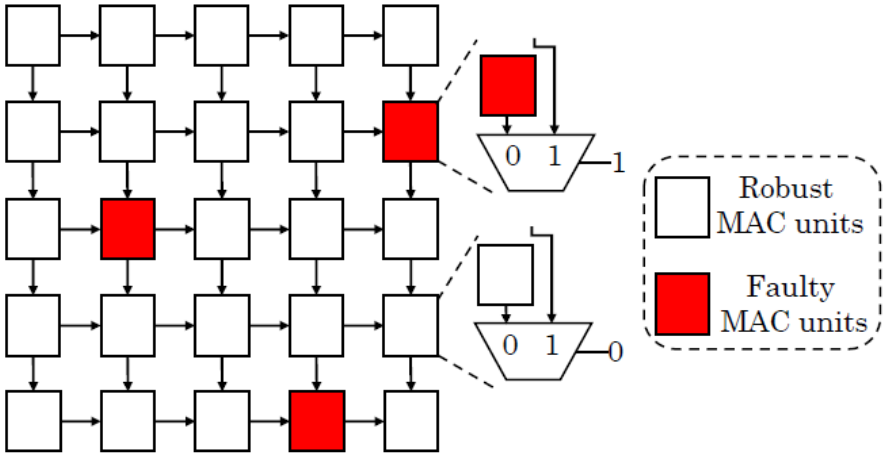

Zhang et al. VTS 2018

Bypassing faulty MACs and retraining

- **Technique 2**: Applying technique 1 and then retrain unpruned weights to recover accuracy loss. During retraining, pruned weights remain zero.
- Result: Even with 50% faulty MACs, their technique can operate TPU with negligible accuracy loss.

References

- S. Mittal, “A Survey on Modeling and Improving Reliability of DNN Algorithms and Accelerators”, JSA, 2021
- S. Mittal et al., “A Survey of Techniques for Modeling and Improving Reliability of Computing Systems,” IEEE TPDS, 2015.
- S. Mittal, “A Survey Of Architectural Techniques for Near-Threshold Computing,” ACM JETC, 2015.