DRAM Subsystem Organization

- Channel
- DIMM
- Rank
- Chip
- Bank
- Row/Column

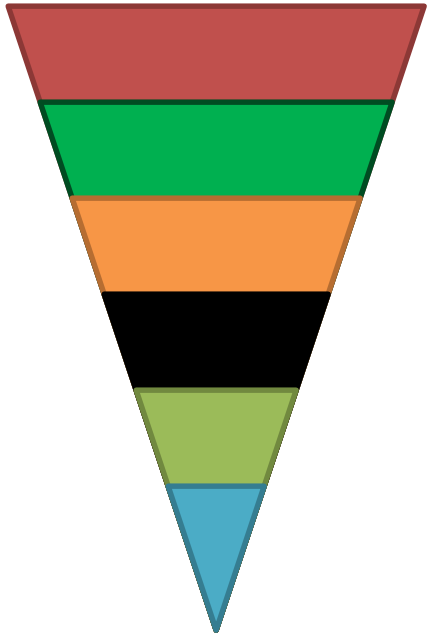

Understanding operation

- Channel: One of the channels will provide the data
- DIMM: One of the DIMMs will provide the data
- Rank: One of the ranks will provide the data
- Chip: All the chips in the rank will provide the data
- Bank: One of the banks in the chip will provide the data

Example: Transferring a cache block

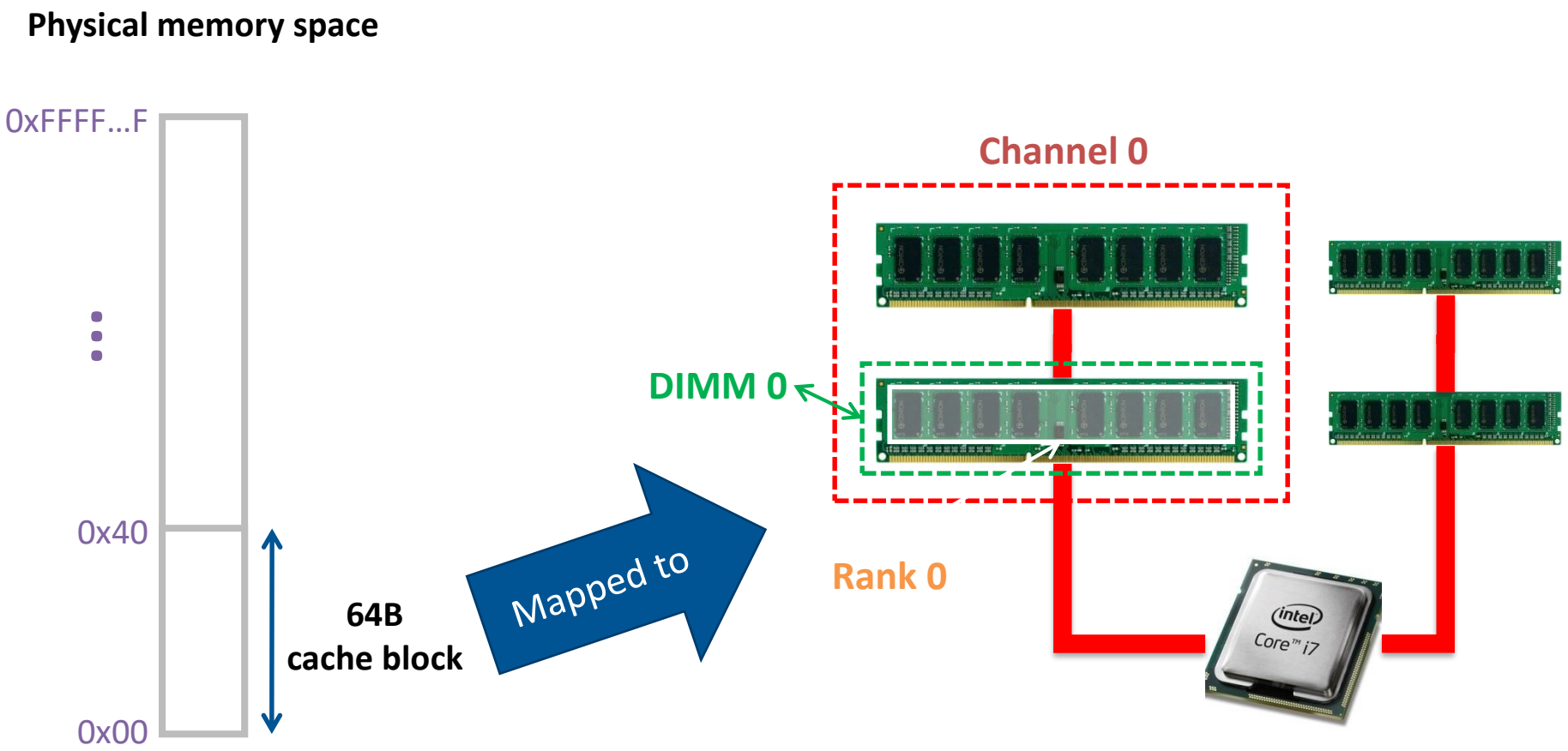

Example: Transferring a cache block

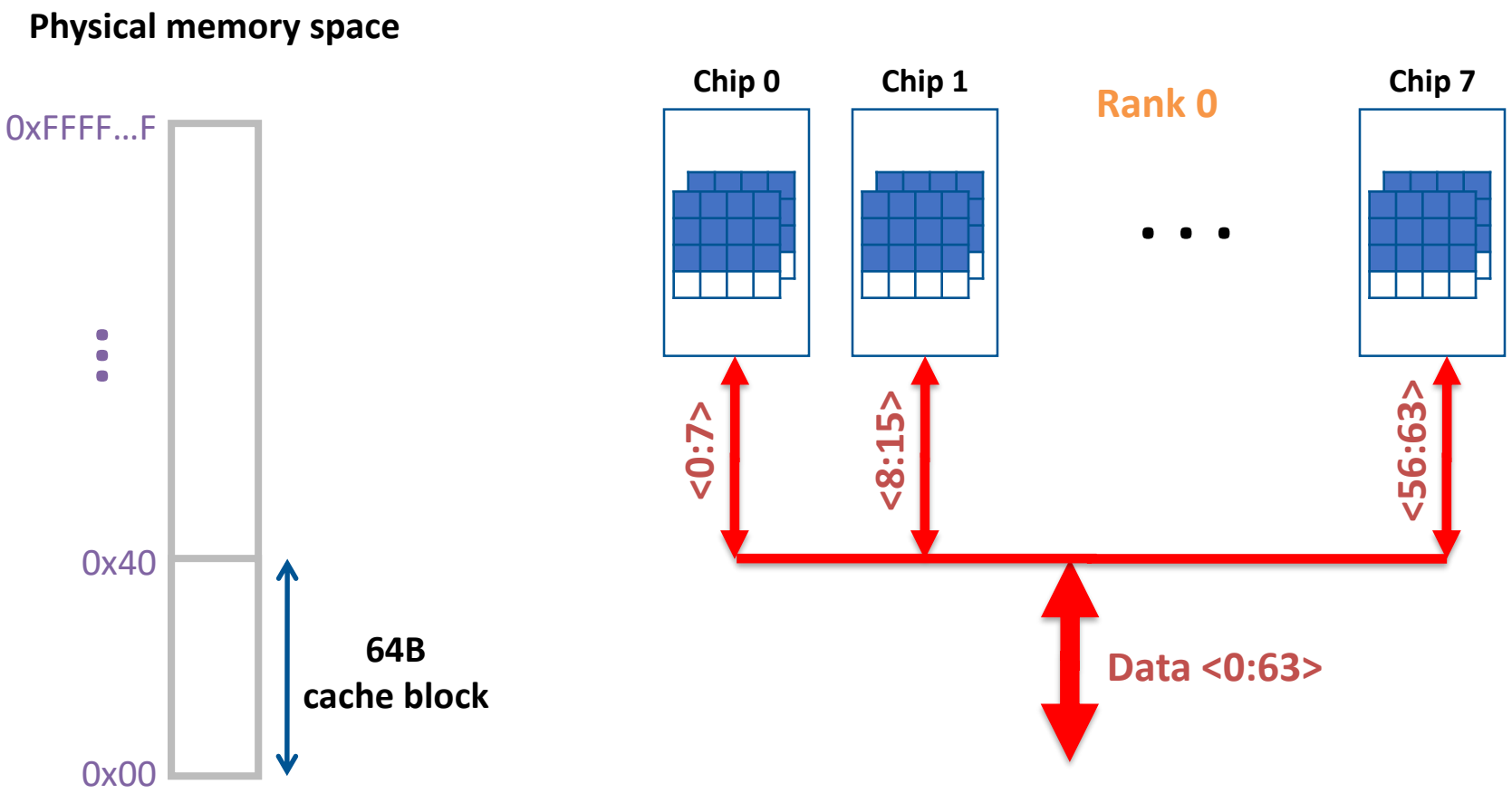

Example: Transferring a cache block

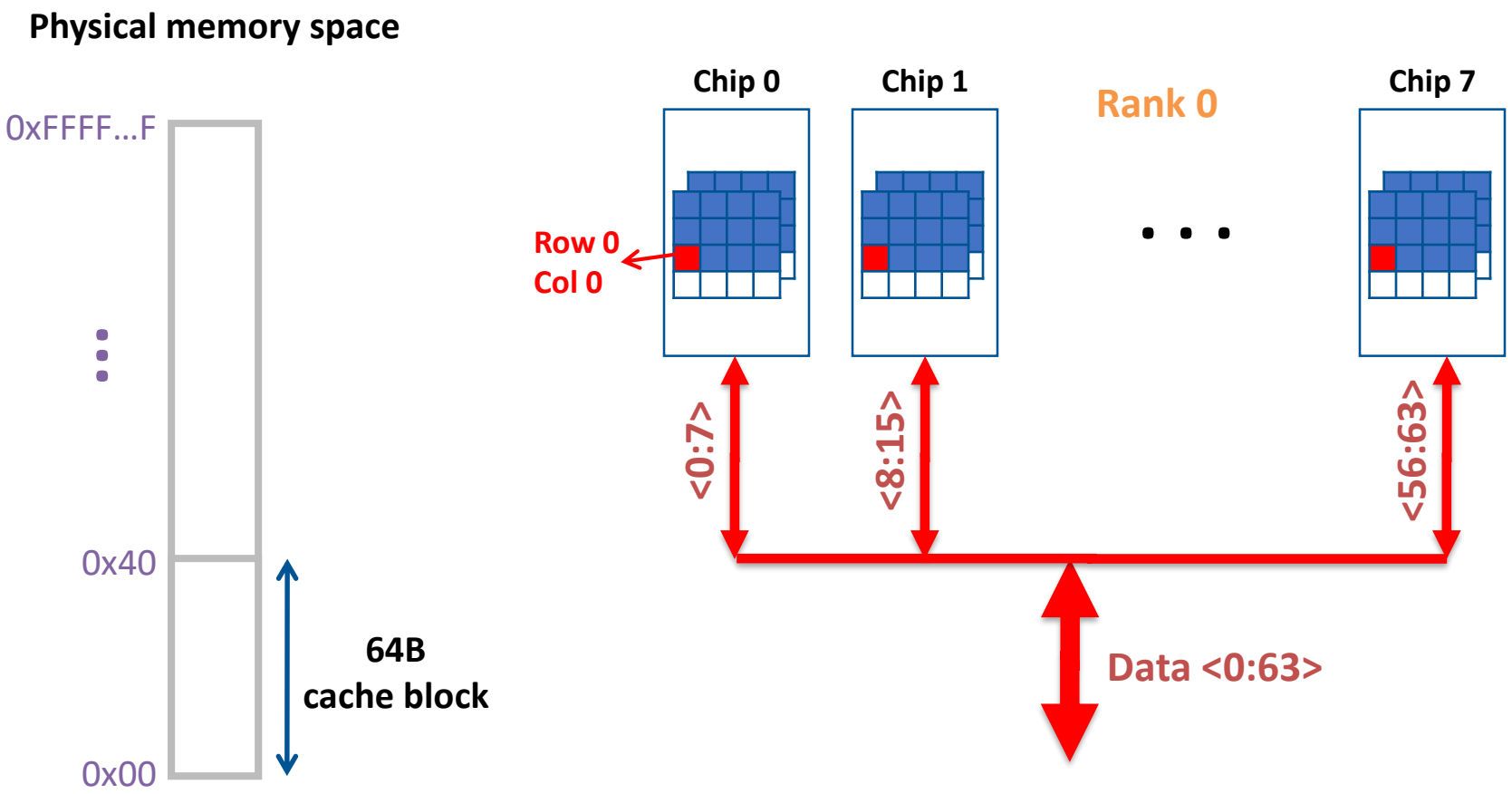

Example: Transferring a cache block

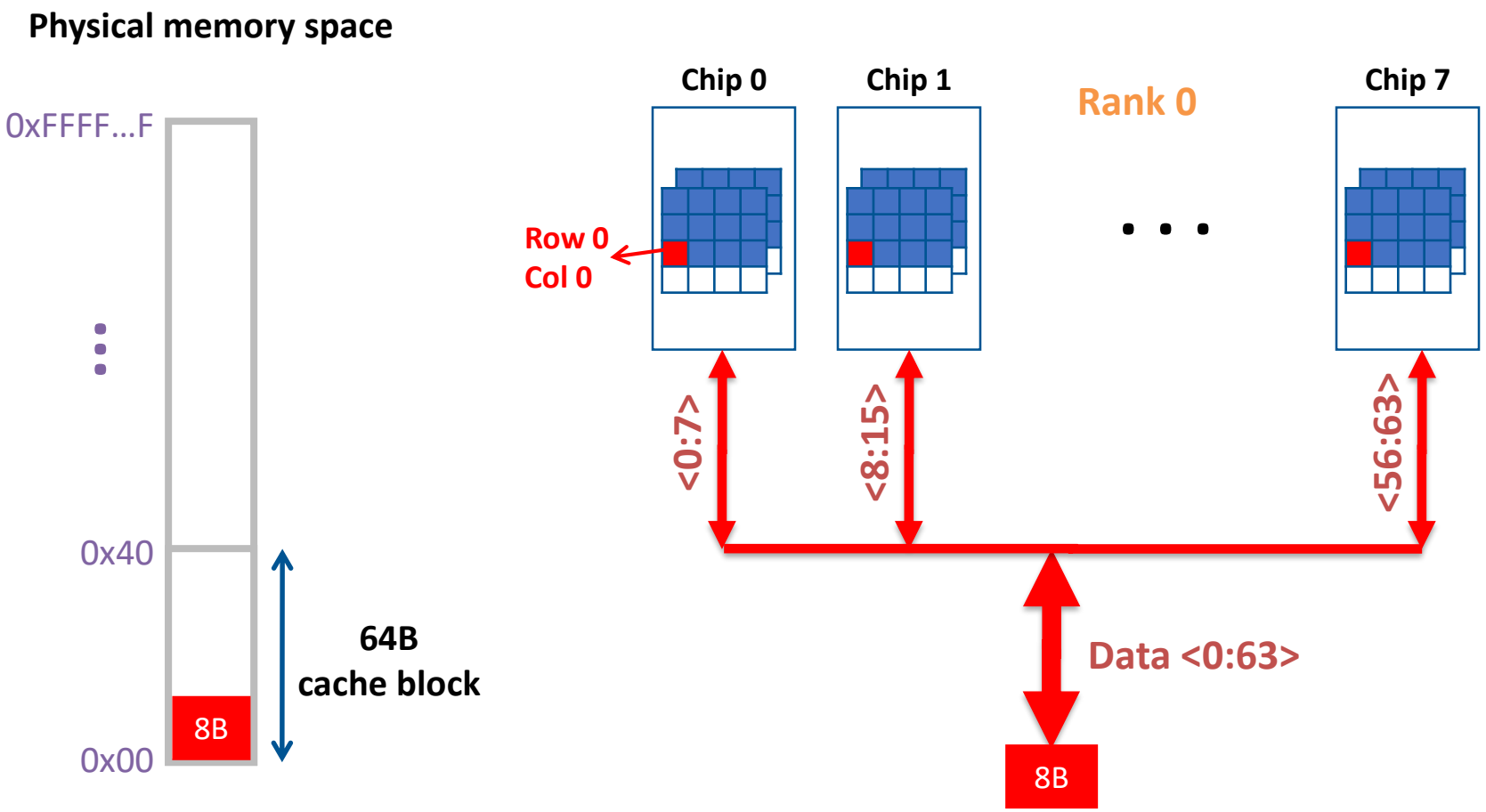

Example: Transferring a cache block

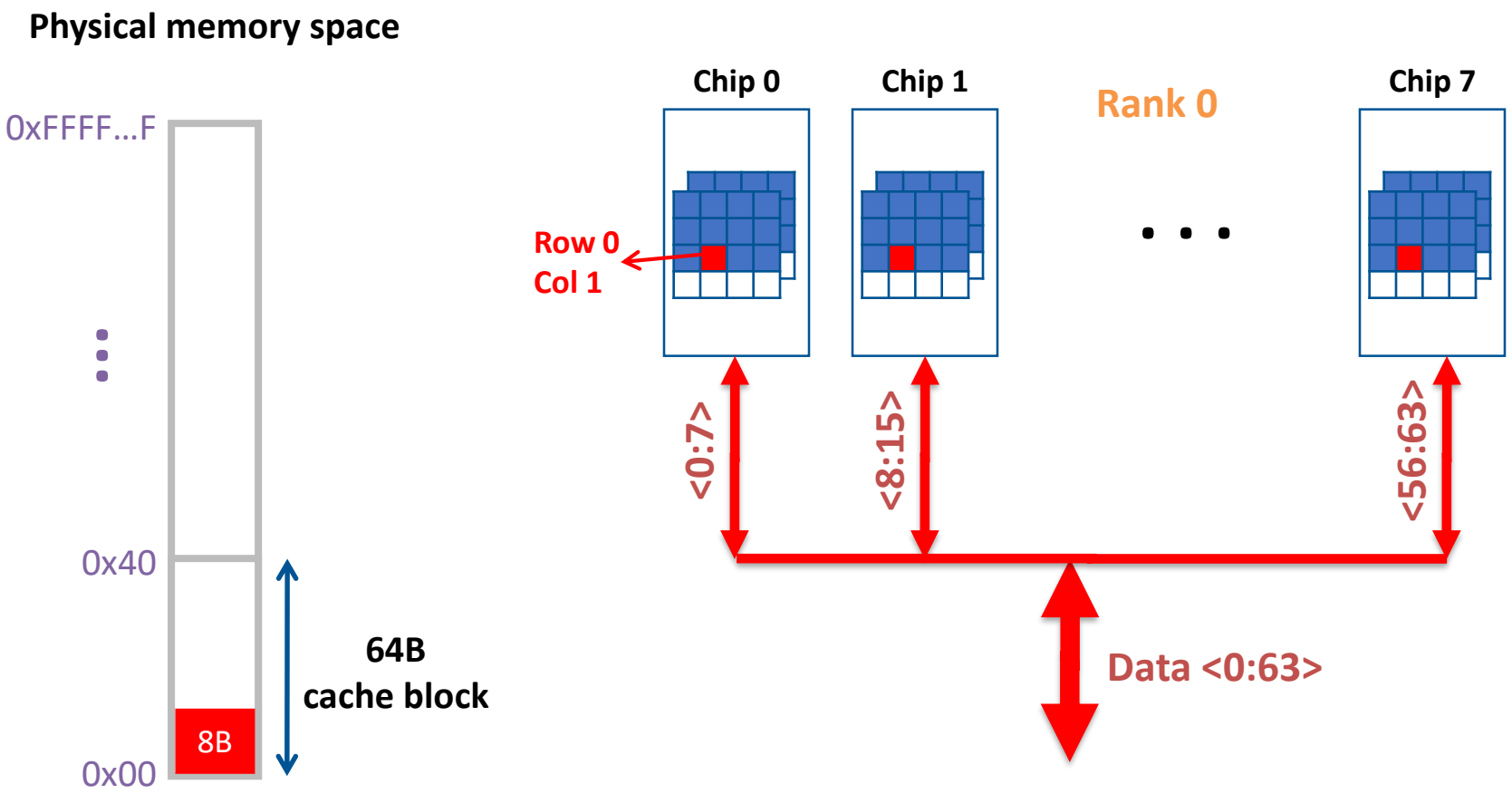

Example: Transferring a cache block

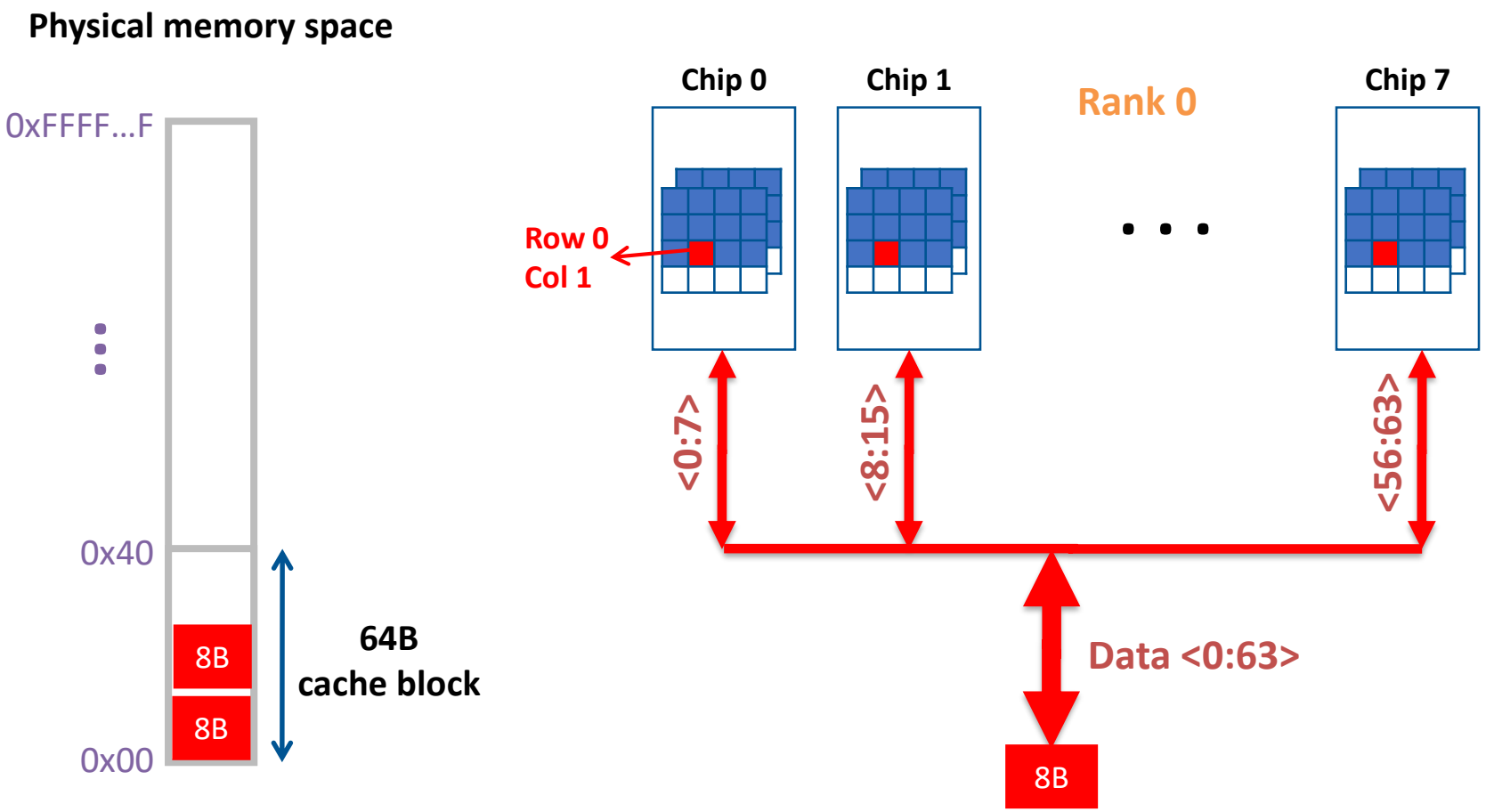

Example: Transferring a cache block

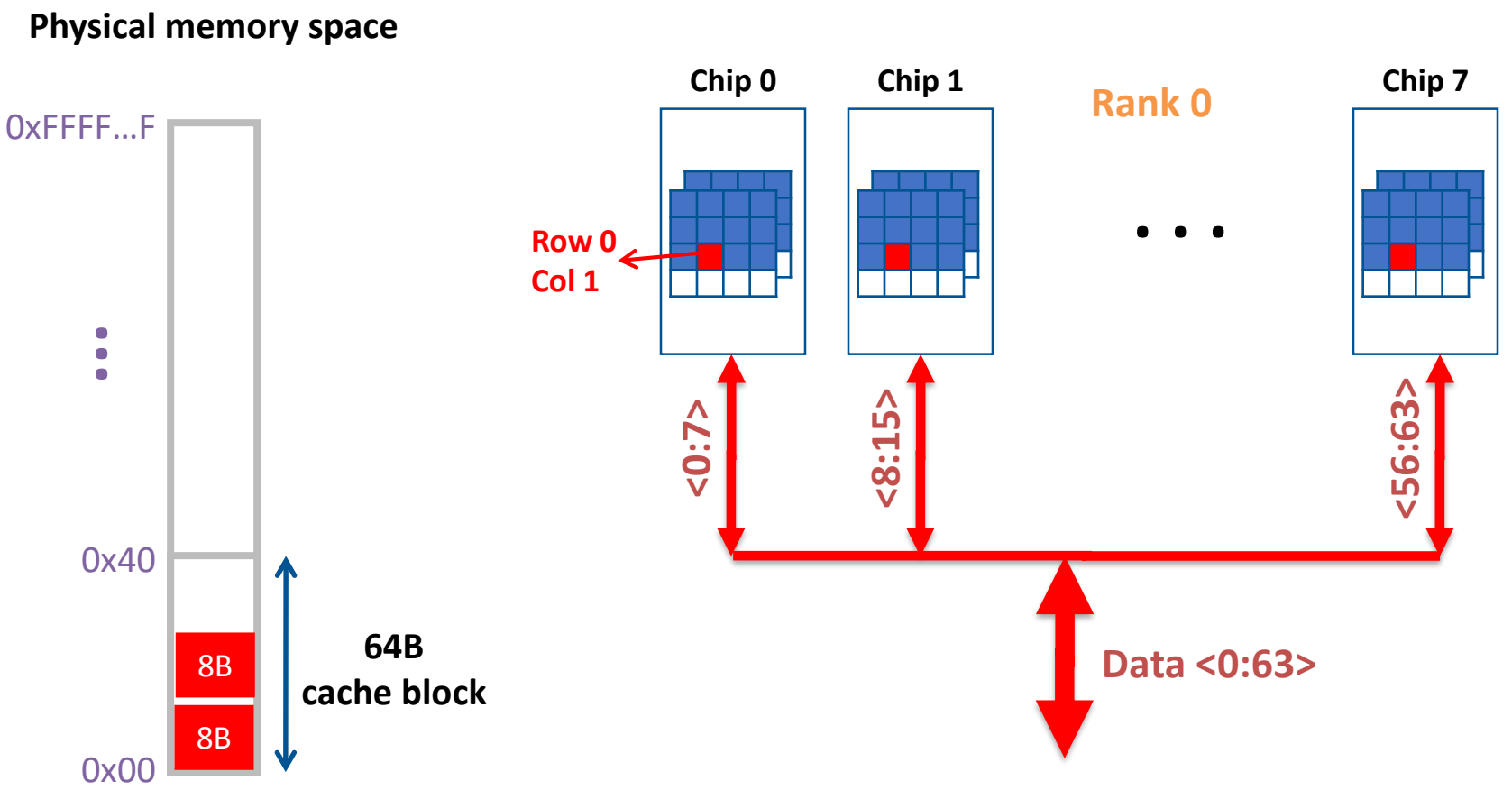

A 64B cache block takes 8 I/O cycles to transfer.

During the process, 8 columns are read sequentially.