DRAM Architecture

Sparsh Mittal

Courtesy: Onur Mutlu and https://medium.com/riselab/ai-and-memory-wall-2cb4265cb0b8

The Main Memory System

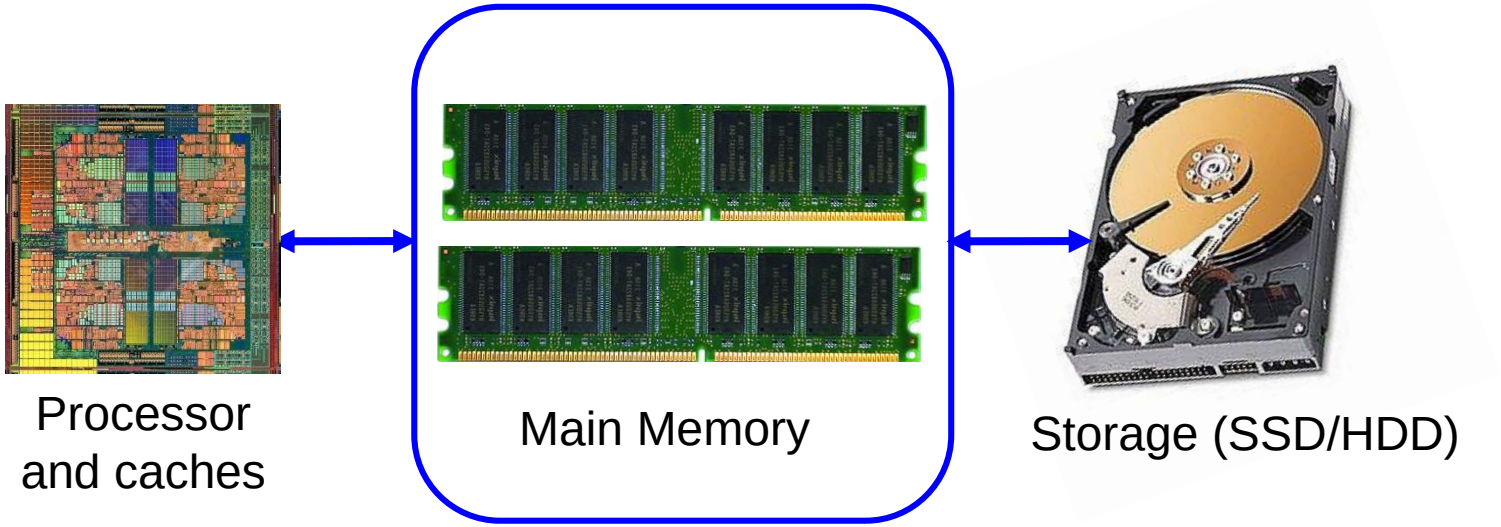

- Main memory is a critical component of all computing systems: server, mobile, embedded, desktop, sensor

Importance of memory for AI

The evolution of the number of parameters of SOTA models over the years, along with the AI accelerator memory capacity

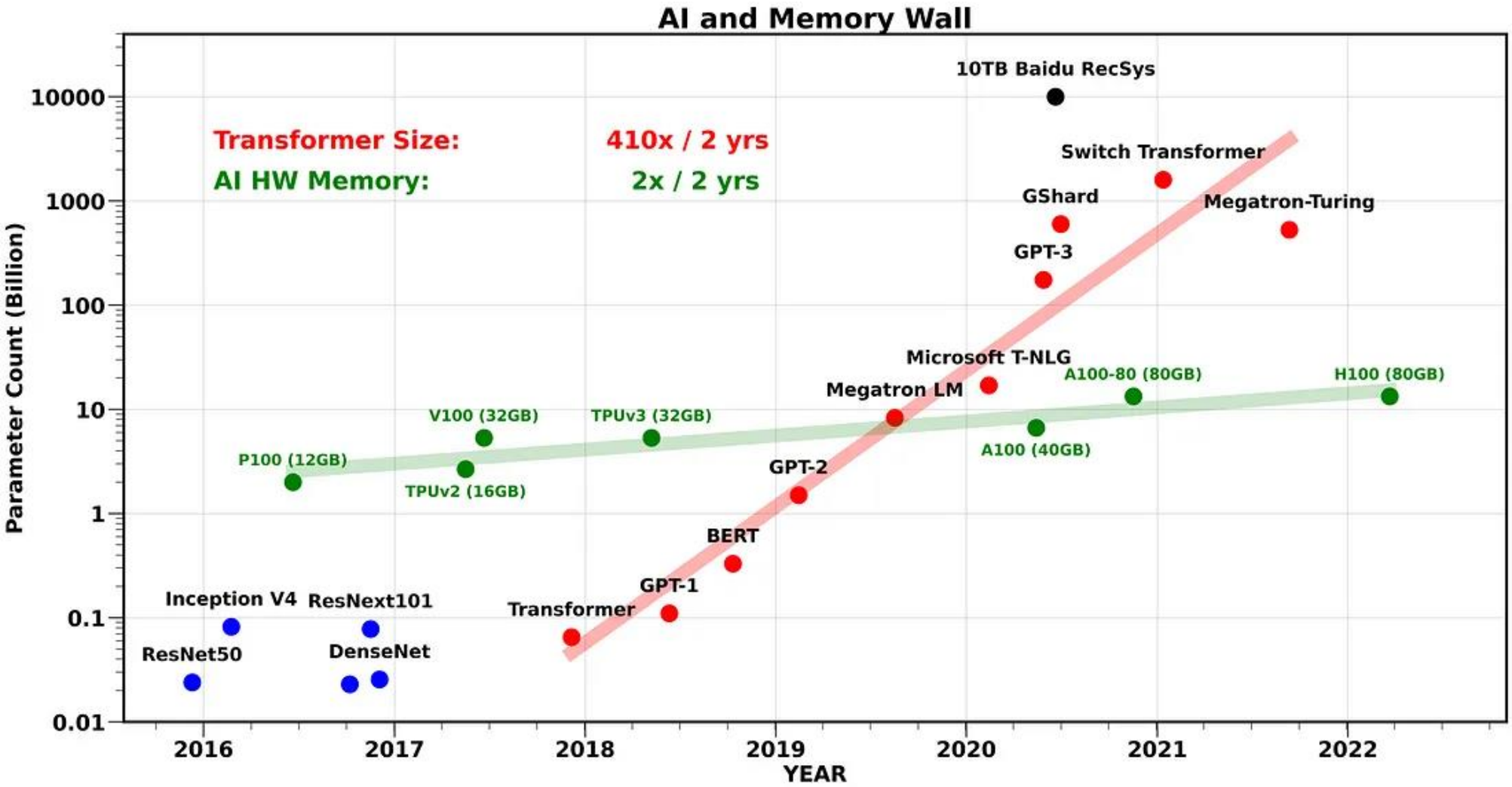

More memory ➔ more AI innovation

- The amount of memory required to train different NN models.
- Every time the GPU memory capacity is increased, scientists have designed newer models.
- ➔ Providing more memory could further allow new innovations.

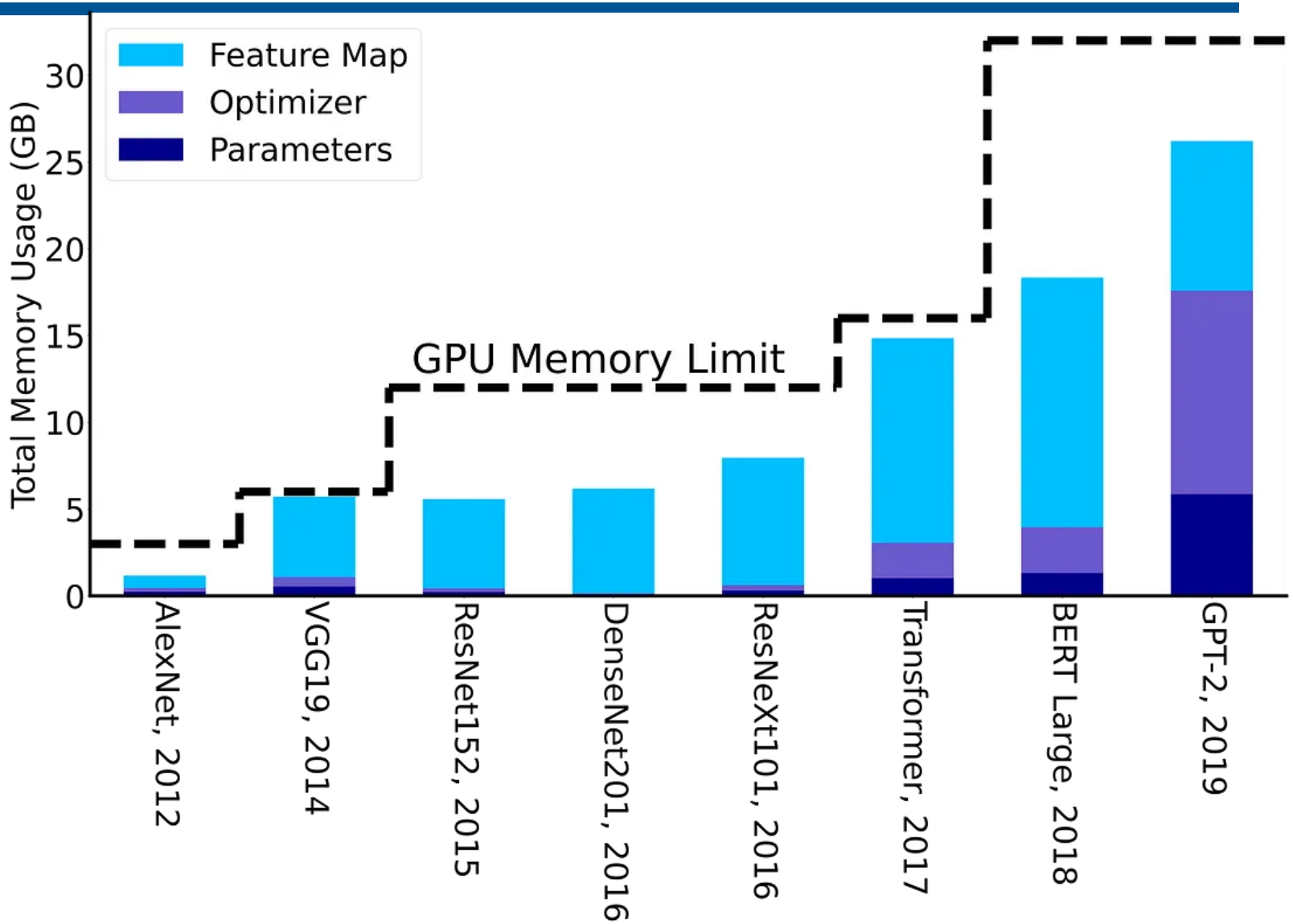

Trends in performance and memory bandwidth

- The scaling of the bandwidth of different generations of interconnections & Memory, as well as the Peak FLOPS.
- The bandwidth is increasing very slowly

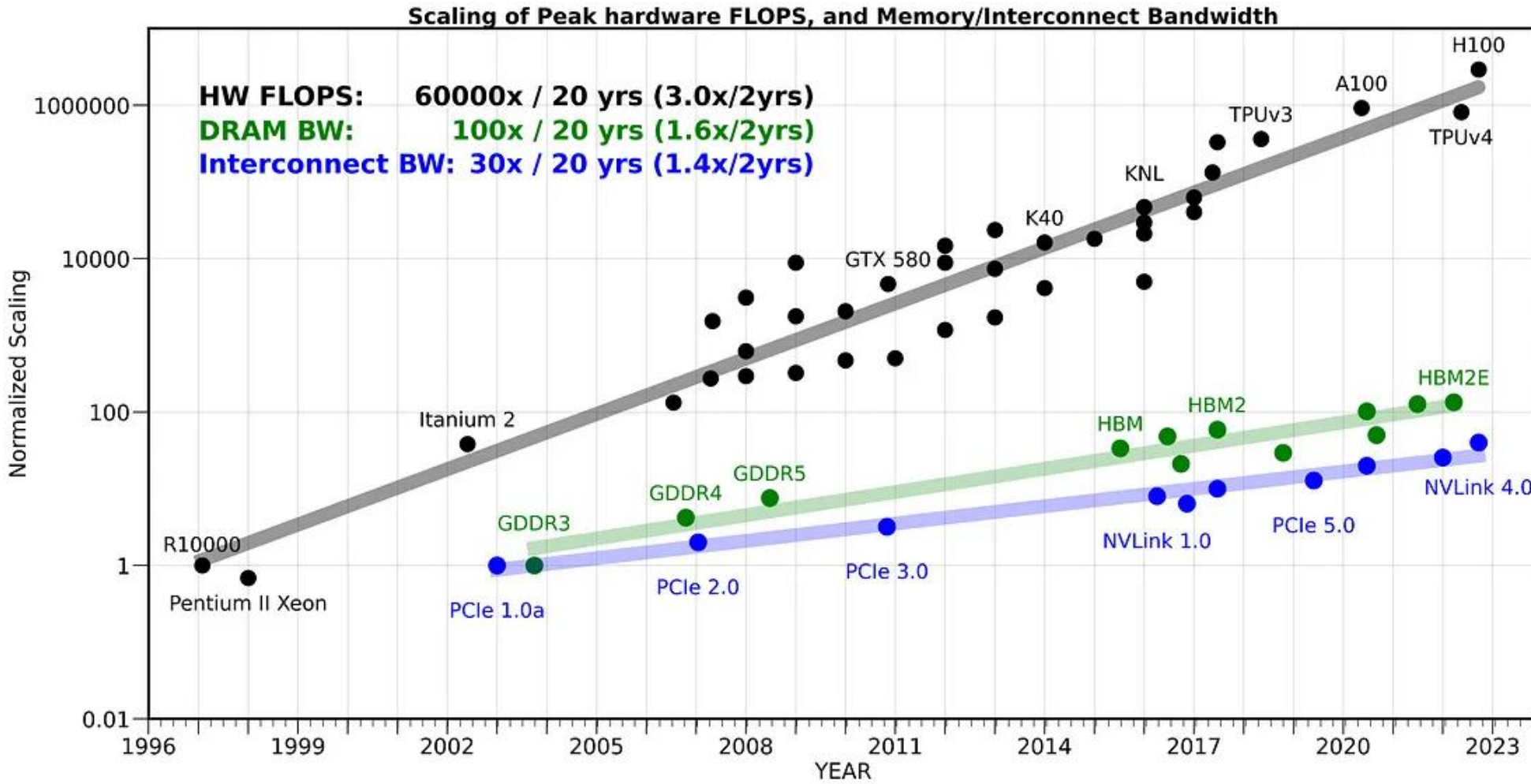

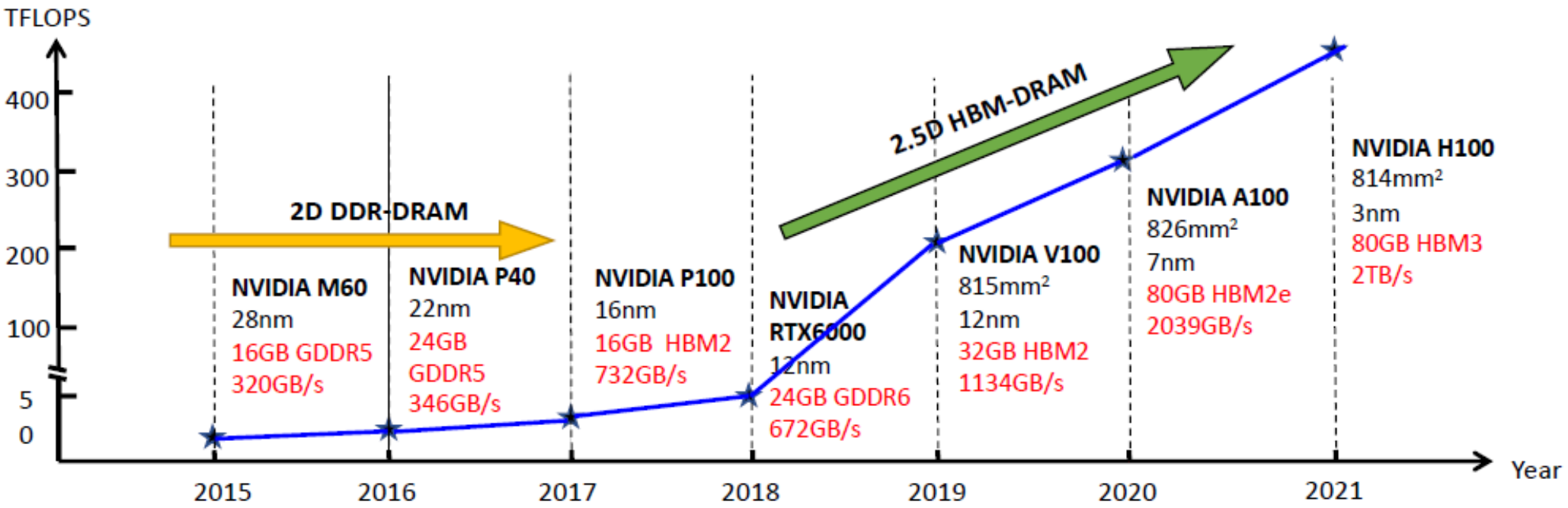

TABLE I: Storage density of DRAM and NAND Flash

Manufacturer	Type	Layers	Storage Density (Gb/mm^2)
SK hynix	Flash	300+	20.00
Samsung	Flash	280	28.50
SK hynix	DDR	1	0.30
SK hynix	LPDDR	1	0.31

Main Memory in the System

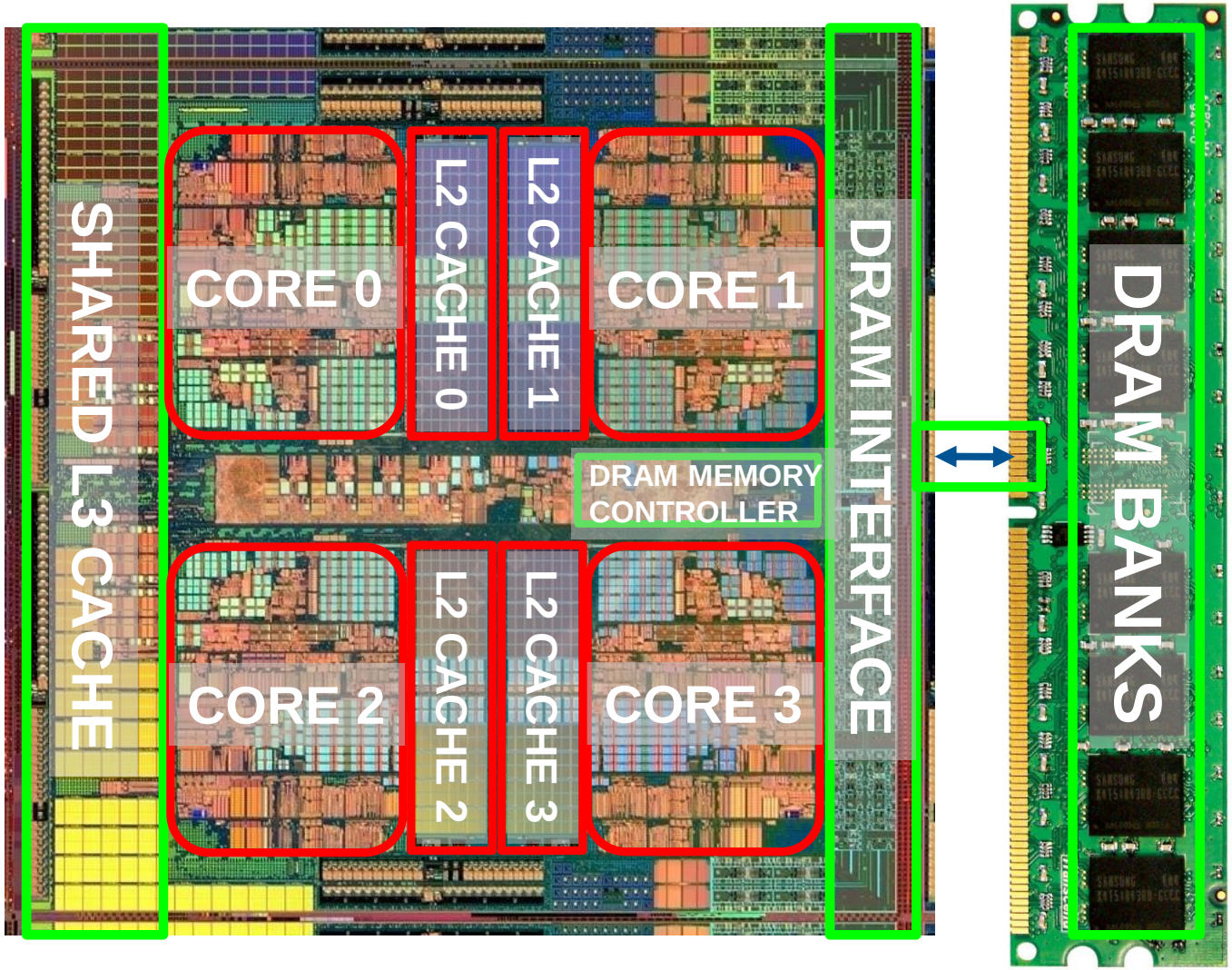

Memory Technology: DRAM

- Dynamic random access memory
- DRAM has 1T1C design (1 capacitor, 1 access transistor)
- Capacitor charge state indicates stored value
  - Whether the capacitor is charged or discharged indicates storage of 1 or 0

- Capacitor leaks through the RC path
  - DRAM cell loses charge over time
  - DRAM cell needs to be refreshed

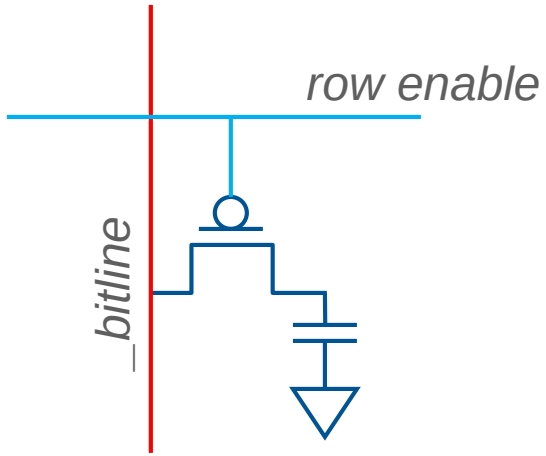

The DRAM Subsystem
Down-to-top view

DRAM Subsystem Organization

- Channel
- DIMM
- Rank
- Chip (aka device)
- Bank
- Row/Column

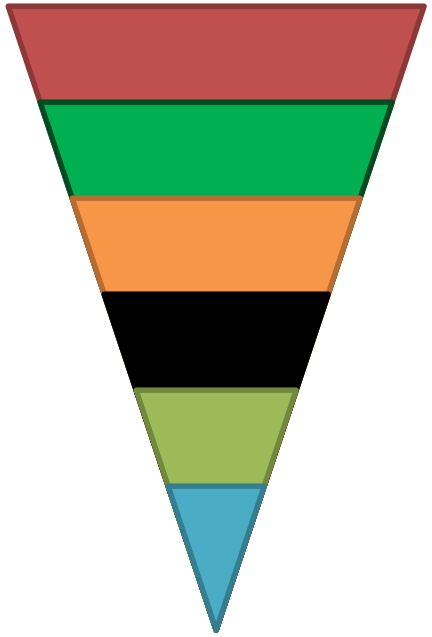

DIMM = dual in-line memory module
DIMM is also just called module

Page Mode DRAM

- A DRAM bank is a 2D array of cells: rows x columns
- A "DRAM row" is also called a "DRAM page"
- "Sense amplifiers" also called "row buffer"
- Each address is a <row,column> pair
- Access to a "closed row"
  - Activate command opens row (places the row into row buffer)
  - Read/write command reads/writes column in the row buffer
- Access to an "open row"
  - No need for activate command

DRAM read is destructive

- DRAM read is destructive.
- It means: read operation removes the charge on the memory cells in an entire row.
- Hence, after reading, we need to store the data in the sense amplifiers (called row buffer).

- Since the same row-buffer is shared between multiple rows, we need to writeback the content of row-buffer to the opened row, so that the row-buffer can be used for another row.
- This is called closing the row or the precharge operation

DRAM Bank Operation

Access Address:
(Row 0, Column 0)
(Row 0, Column 1)
(Row 0, Column 85)
(Row 1, Column 0)

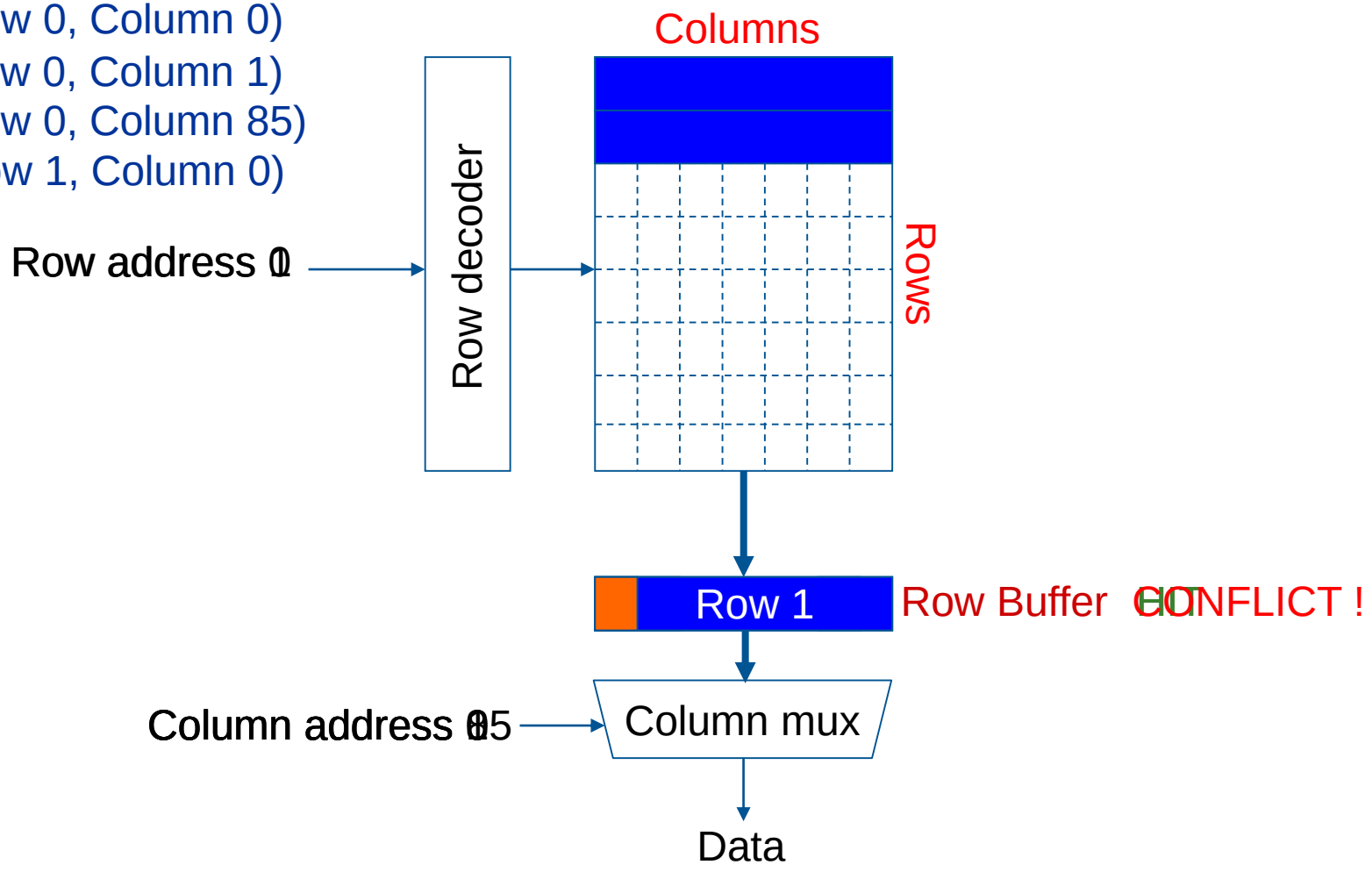

DRAM bank latency

- DRAM bank latency components

Short-form	Full-form	When incurred
CAS	Column address strobe	Accessing a single column of an opened row from row-buffer
RAS	Row address strobe	Latency of activating a row
PRE	Precharge	Latency of closing a row

- How much latency is incurred in each case?

Case	Latency incurred
Row-buffer hit	CAS
Row-buffer miss	CAS+RAS
Row-buffer conflict	CAS+RAS+Precharge

The DRAM Chip

- Consists of multiple banks (2-16 in Synchronous DRAM)
- Banks share command/address/data buses
- The chip itself has a narrow interface (4-16 bits per read)

- What are x4, x8, x16 chips?
- Answer: An xN DRAM chip has a word size of N
- Here, N= #bits going in/out of the chip on each clock tick.

- For a 64-bit data bus and x8 chips, a rank would require 8 DRAM chips

DRAM Rank and Module

- Rank: Multiple chips operated together to form a wide interface
- All chips comprising a rank are controlled at the same time
  - Respond to a single command
  - Share address and command buses, but provide different data
- A DRAM module consists of one or more ranks
  - E.g., DIMM (dual inline memory module)
  - This is what you plug into your motherboard
- If we have chips with 8-bit interface, to read 8 bytes in a single access, use 8 chips in a DIMM

A 64-bit Wide DIMM (One Rank)

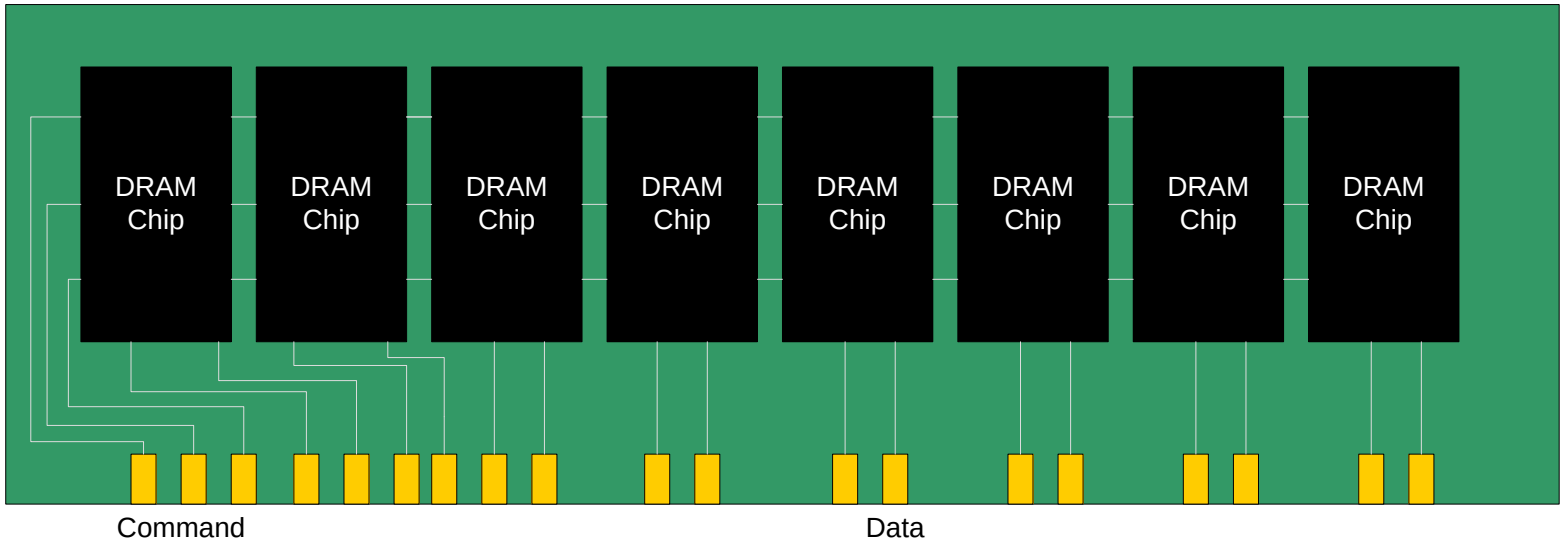

A 64-bit Wide DIMM (One Rank)

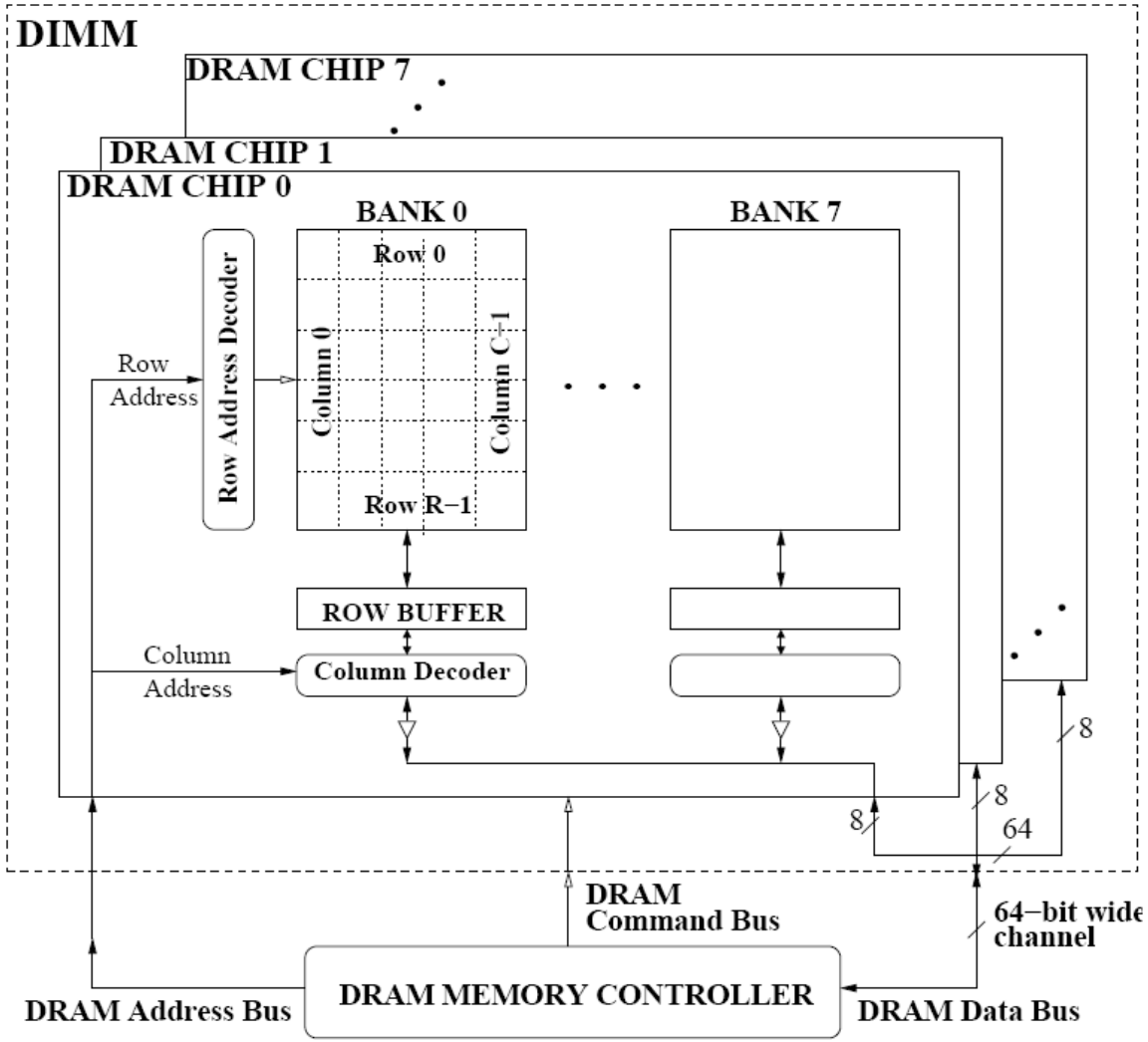

- In a rank, each chip provides 8 bits of data (assuming x8 chips).
- So, total data out of the rank is 64 bits.

Breaking down a DIMM

DIMM (Dual in-line memory module)

Side view

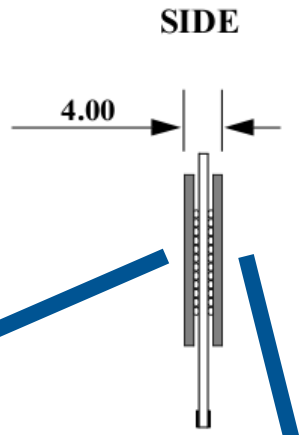

Front of DIMM

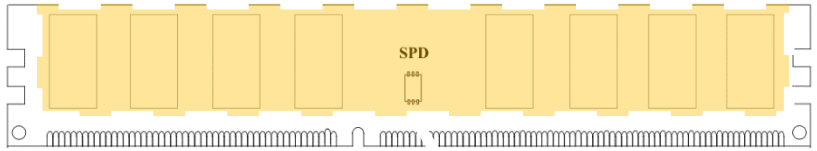

Back of DIMM

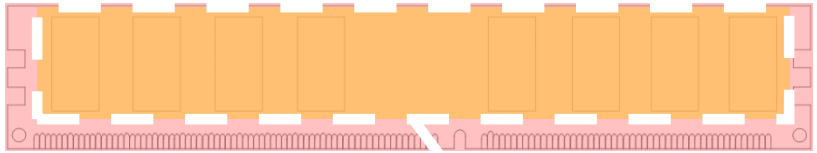

Rank 0: collection of 8 chips

Rank 1

Multiple DIMMs

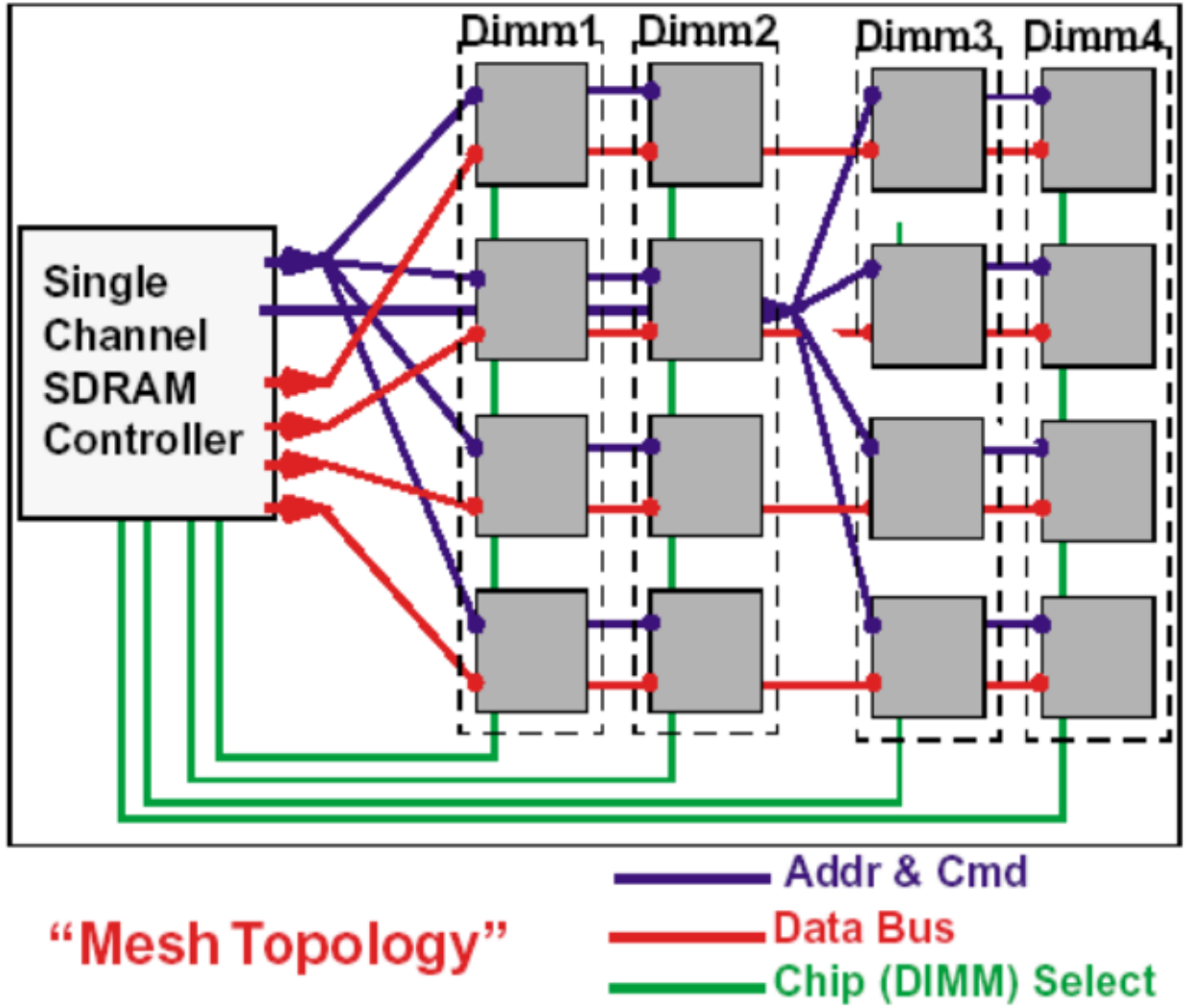

- Enables even higher capacity

DRAM Channels

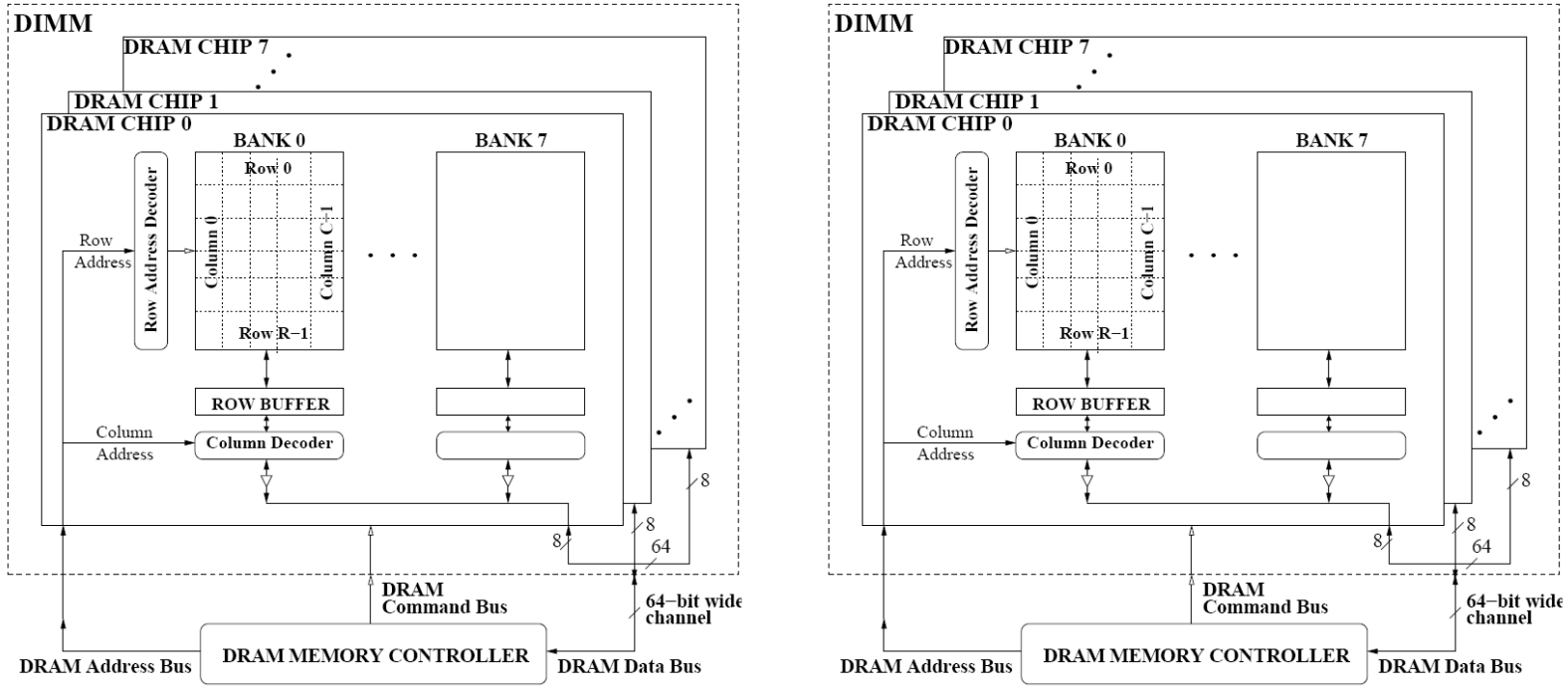

- 2 Independent Channels: 2 Memory Controllers (Above)
- 2 Dependent/Lockstep Channels: 1 Memory Controller with wide interface (Not shown above)

Generalized Memory Structure

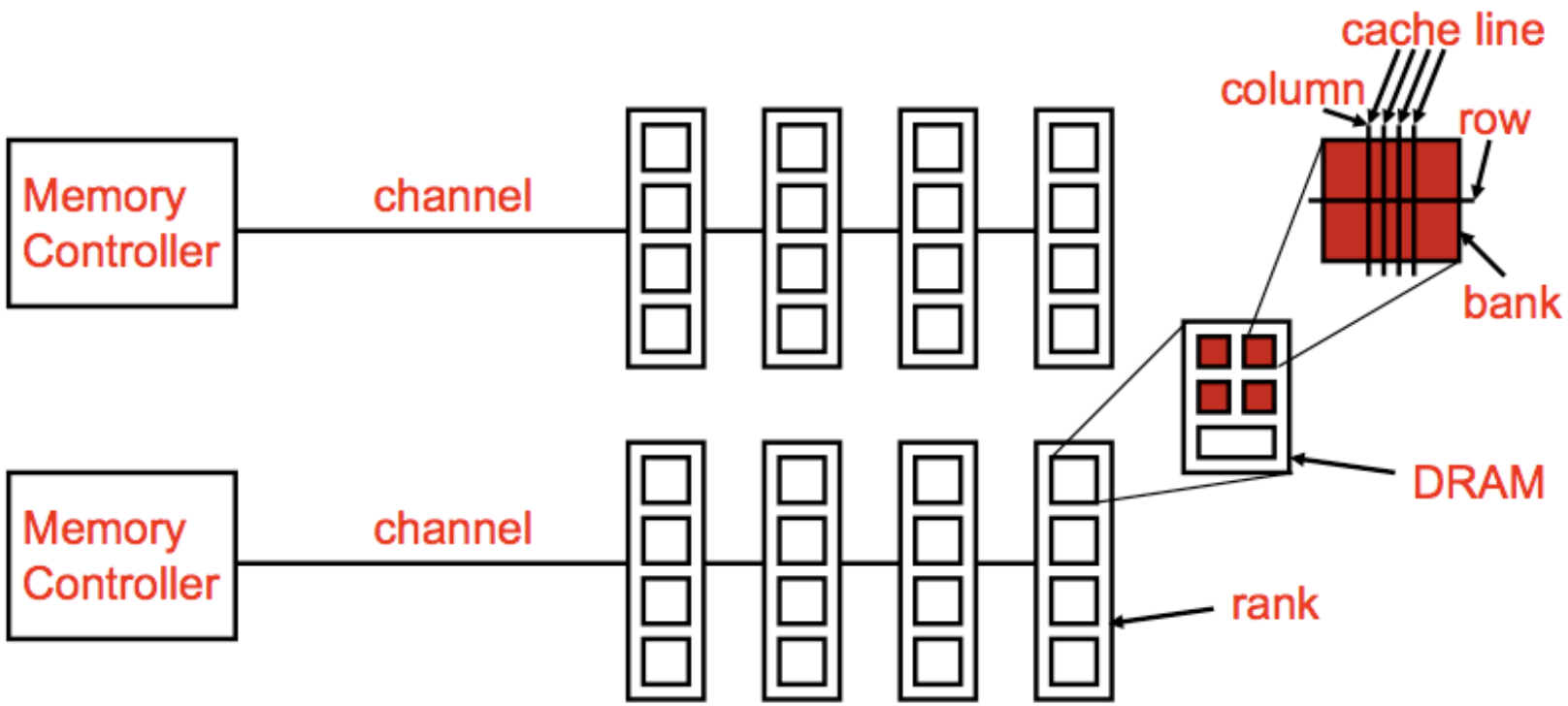

Generalized Memory Structure

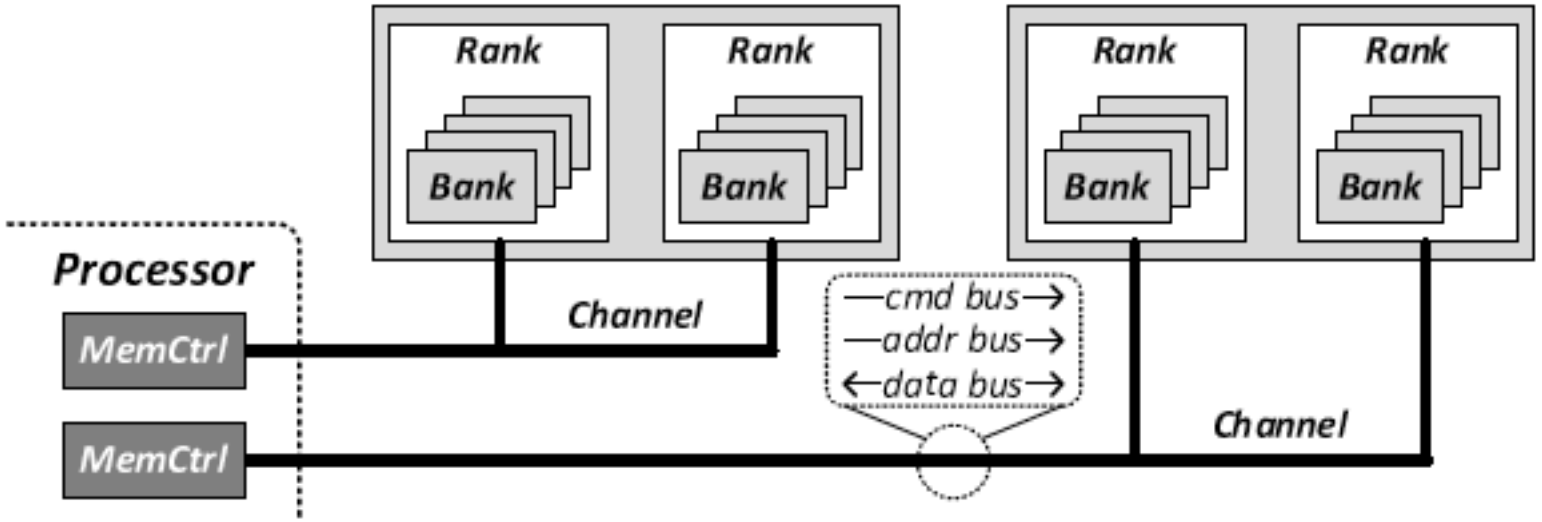

The DRAM Subsystem
The Top Down View

DRAM Subsystem Organization

- Channel
- DIMM
- Rank
- Chip (aka device)
- Bank
- Row/Column

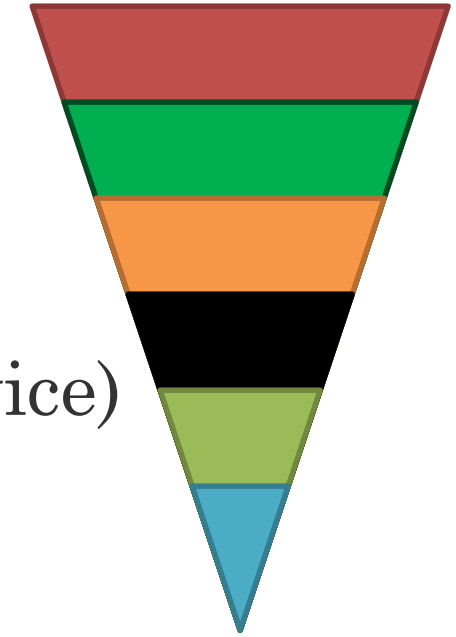

The DRAM subsystem

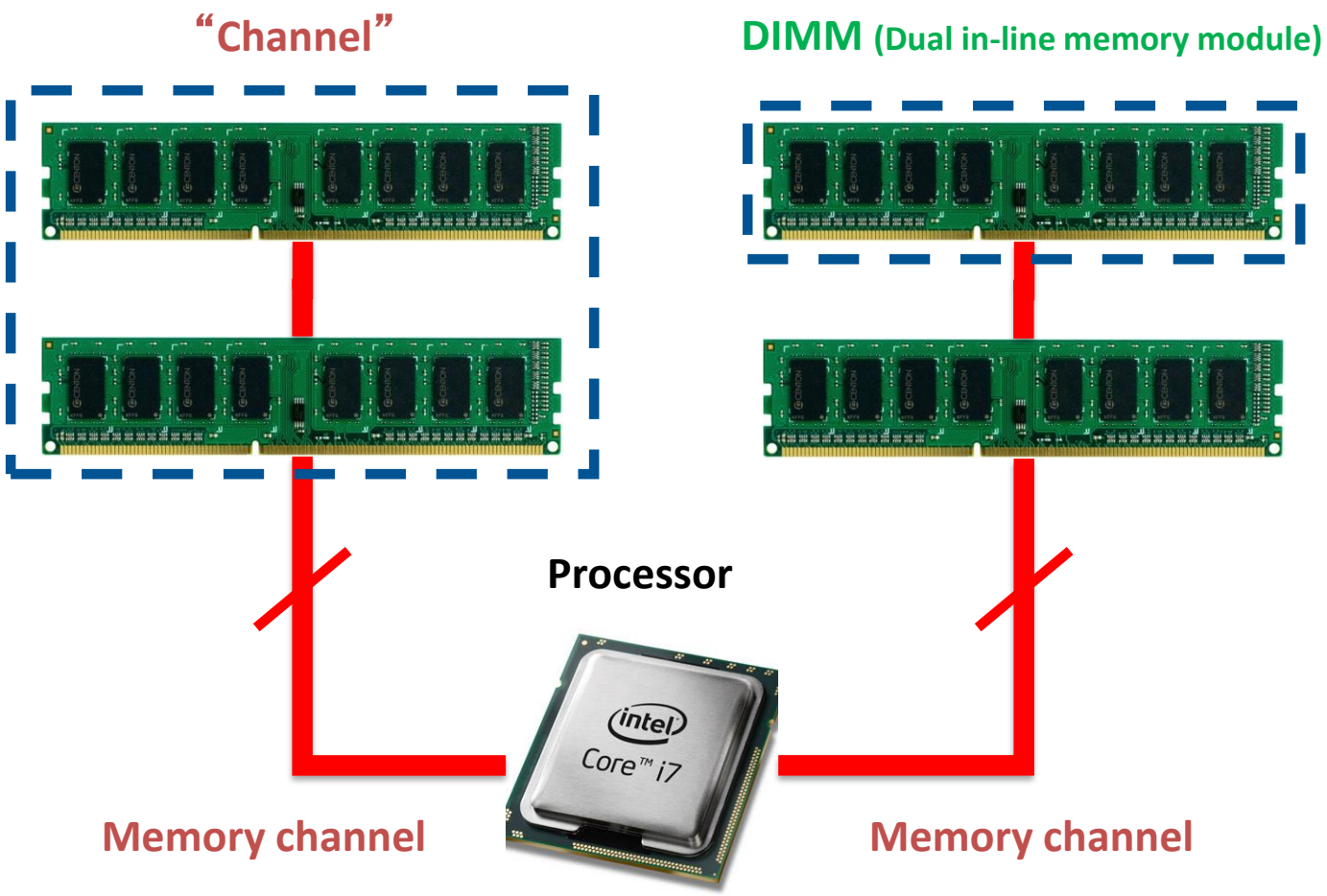

Breaking down a DIMM

DIMM (Dual in-line memory module)

Side view

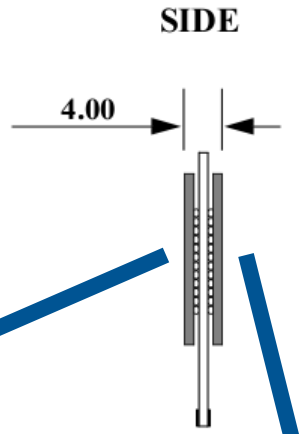

Front of DIMM

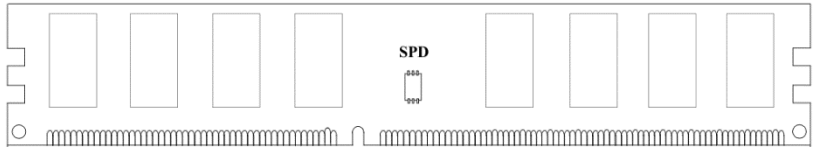

Back of DIMM

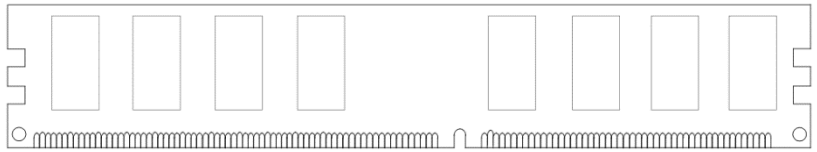

Breaking down a DIMM

DIMM (Dual in-line memory module)

Side view

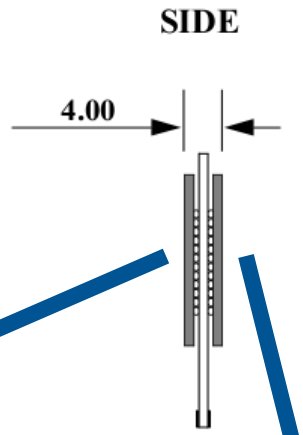

Front of DIMM

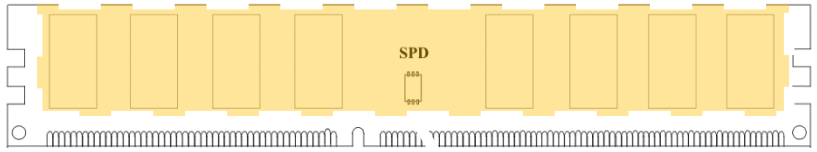

Back of DIMM

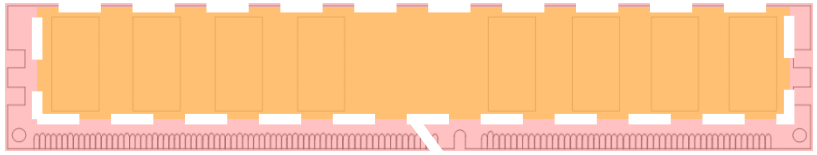

Rank 0: collection of 8 chips

Rank 1

Rank

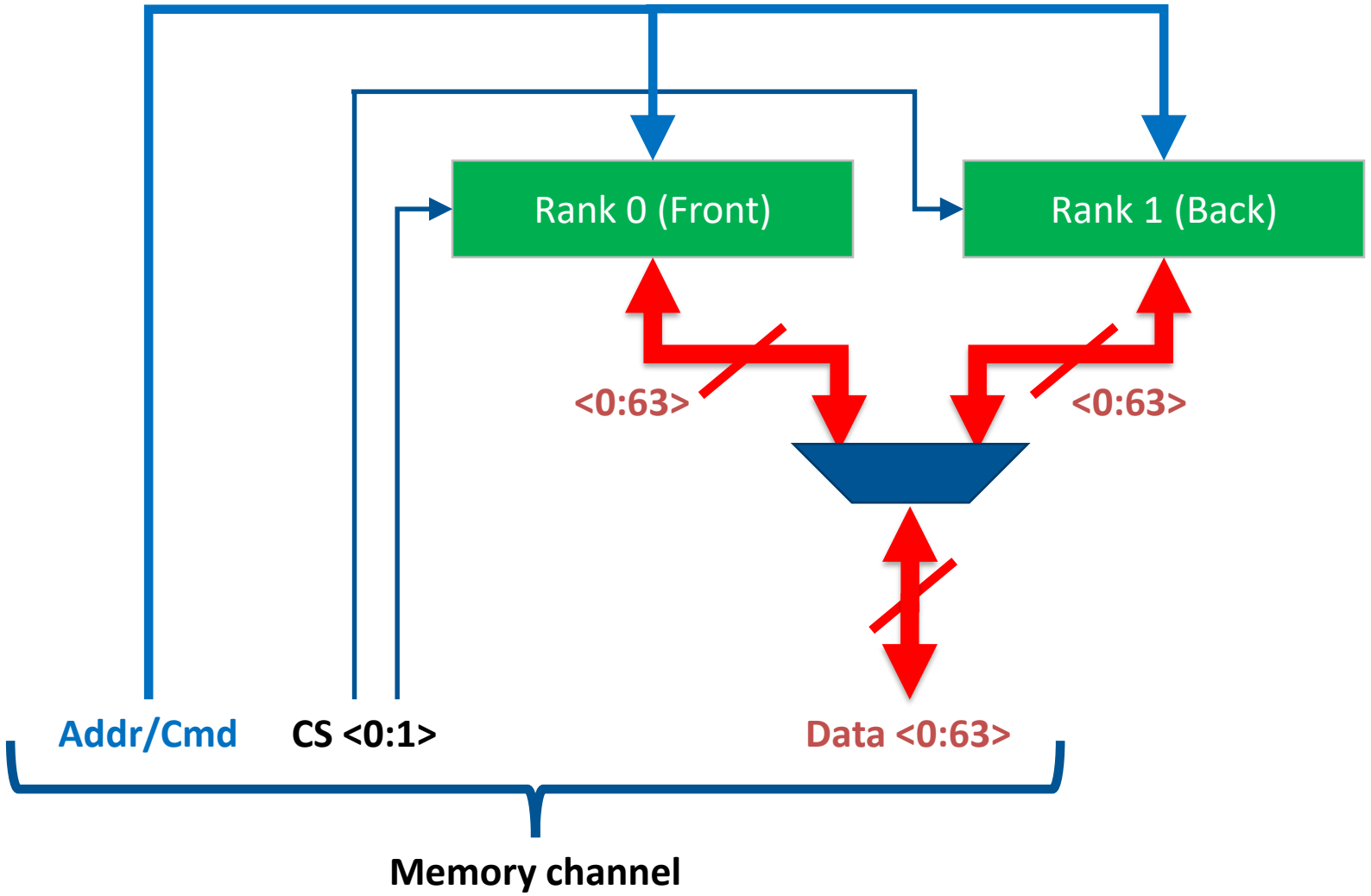
Rank 0 (Front)
Rank 1 (Back)
<0:63>
<0:63>
Addr/Cmd
CS <0:1>
Data <0:63>
Memory channel

Breaking down a Rank

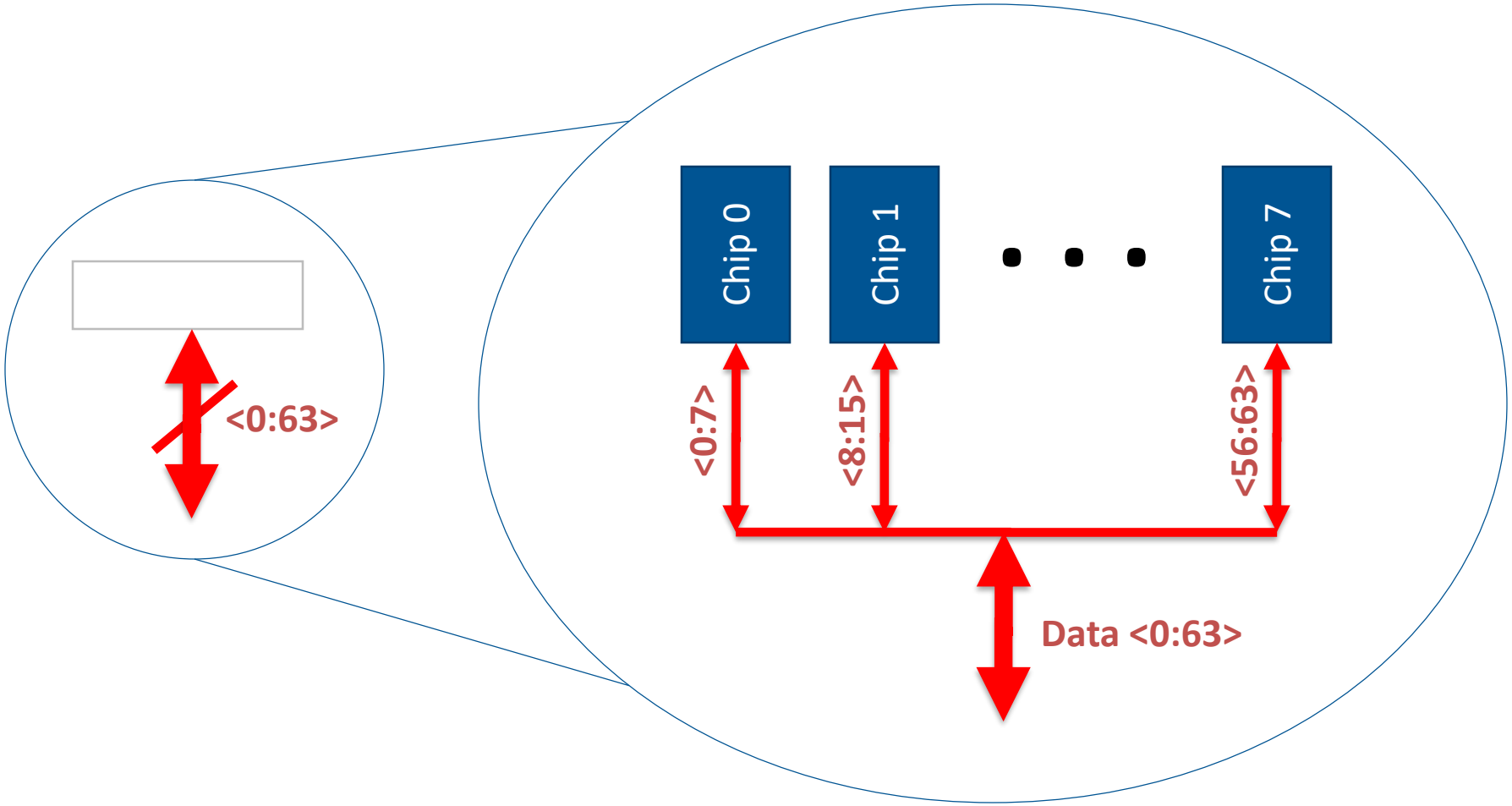

Breaking down a Chip

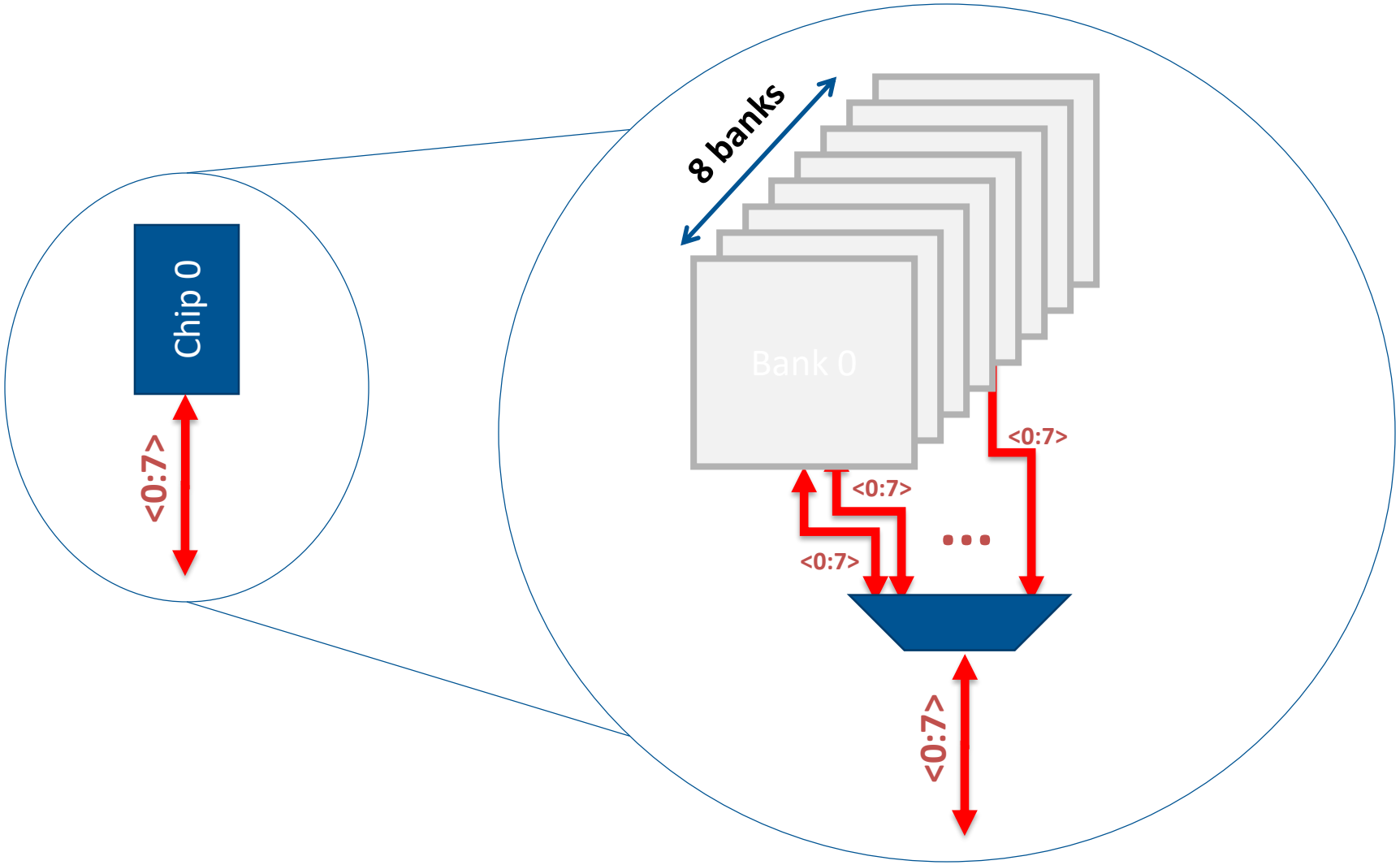

Breaking down a Bank

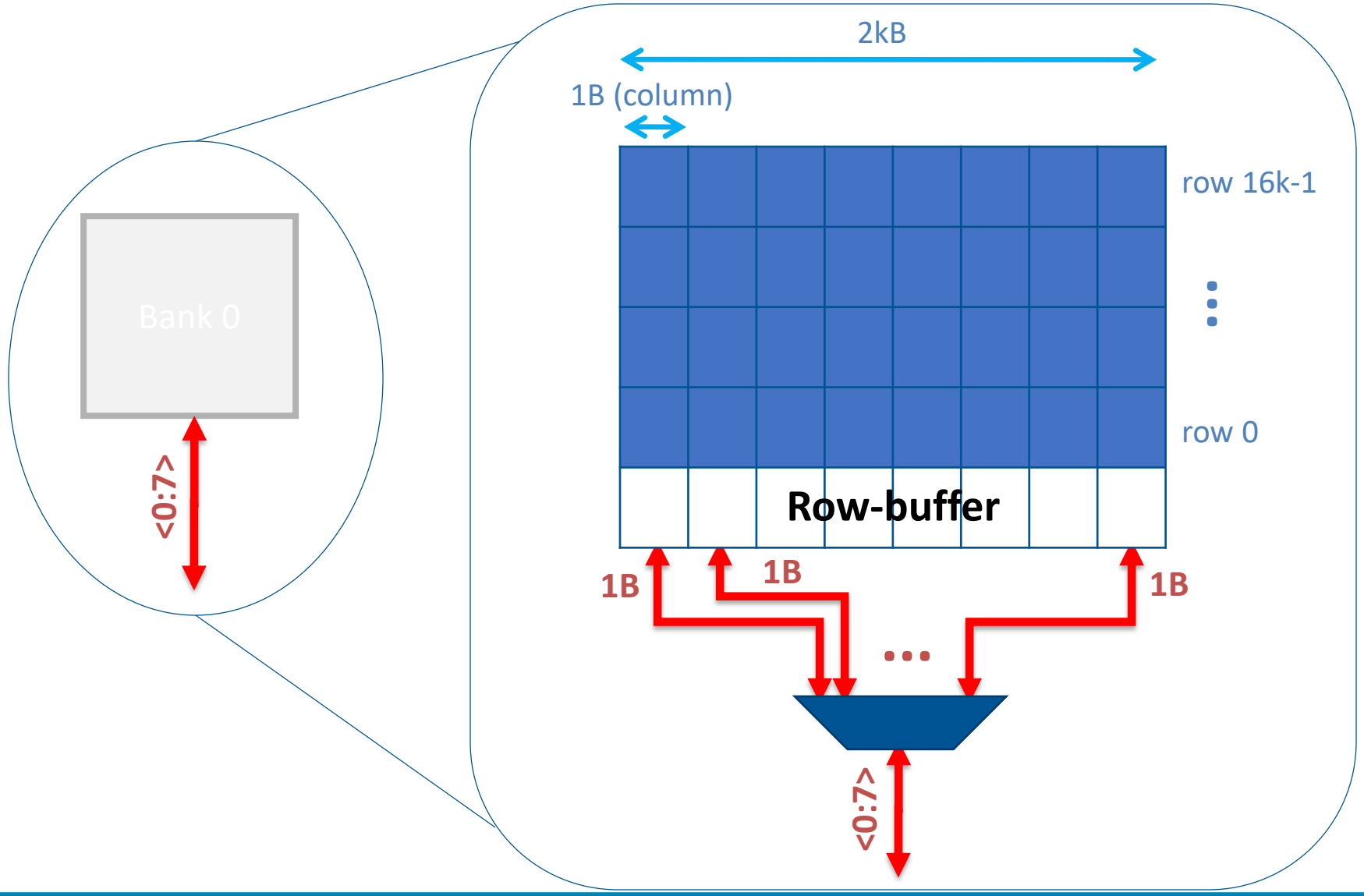

DRAM Refresh (I)

- DRAM capacitor charge leaks over time
- The memory controller needs to read each row periodically to restore the charge
  - Activate + precharge each row every N m
  - Typical N = 64 ms

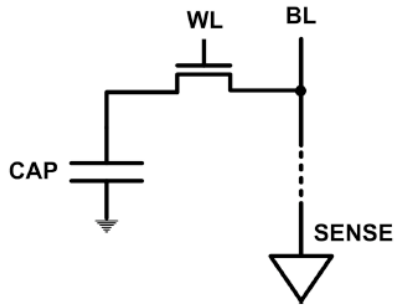

- Implications on performance?
  -- DRAM bank unavailable while refreshed
  -- Long pause times: If we refresh all rows in burst, every 64ms the DRAM will be unavailable until refresh ends

DRAM Refresh Options

- Burst refresh: All rows refreshed immediately after one another
- Distributed refresh: Each row refreshed at a different time, at regular intervals

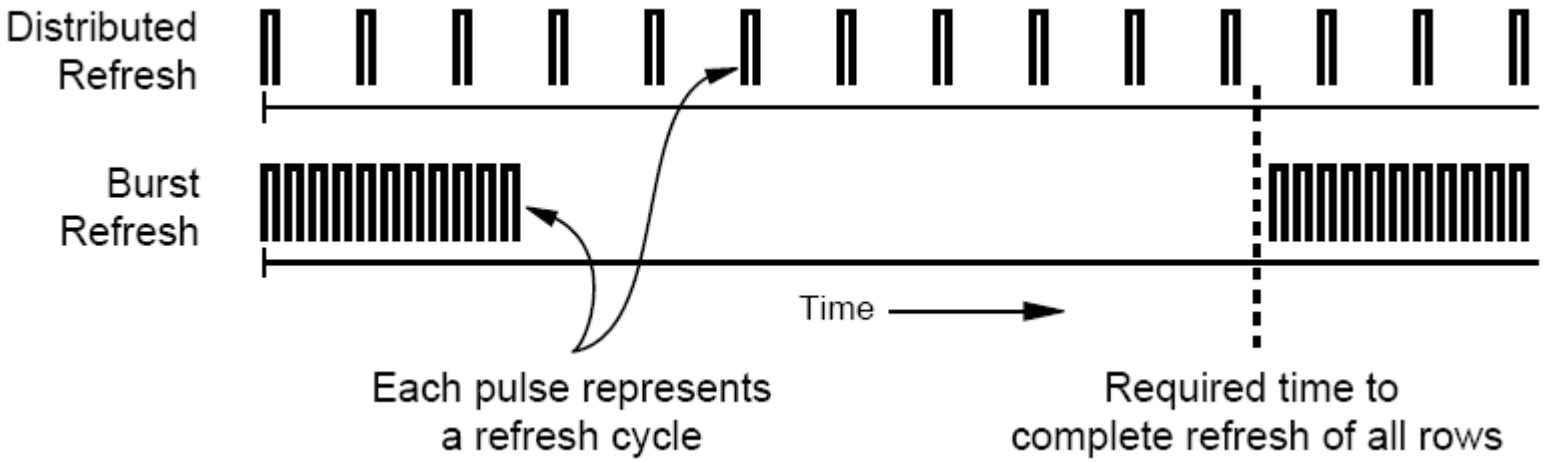

- Distributed refresh eliminates long pause times

DDR Protocol

- DRAM chips have specially designed input/output (I/O) interfaces.
- Double-data-rate (DDR) series is a synchronous mechanism to boost the data transfer rate given a limited DRAM internal clock frequency.
- For example, the DRAM internal clock cycle time is 5 ns (thus the frequency is 200 MHz) due to the required time for correct sensing.
- The interface uses double pumping (transferring data on both the rising and falling edges of the clock signal), ➔ double data rate.
- DDR effectively doubles I/O bandwidth at the same internal clock frequency
- Thus, it achieves 400 M bit per second per I/O pin (i.e., 400 Mbps/pin)
- For 64-bit-wide DIMM, it is 400*64/(8*1000) GB/s = 3.2 GB/s

DDR variants

- DDR2, DDR3, DDR4, and DDR5 simply means the interface clock frequency will be running at a 2×, 4×, 8×, and 16× higher frequency than the DRAM internal clock frequency, resulting in substantial boosts of the I/O bandwidth.
- Example of DDR3: if the DRAM internal clock frequency is 200 MHz, and the interface clock frequency is 800 MHz, it results in 1600 Mbps/pin, and thus 12.8 GB/s for a 64-bit-wide DIMM.

DDR protocol

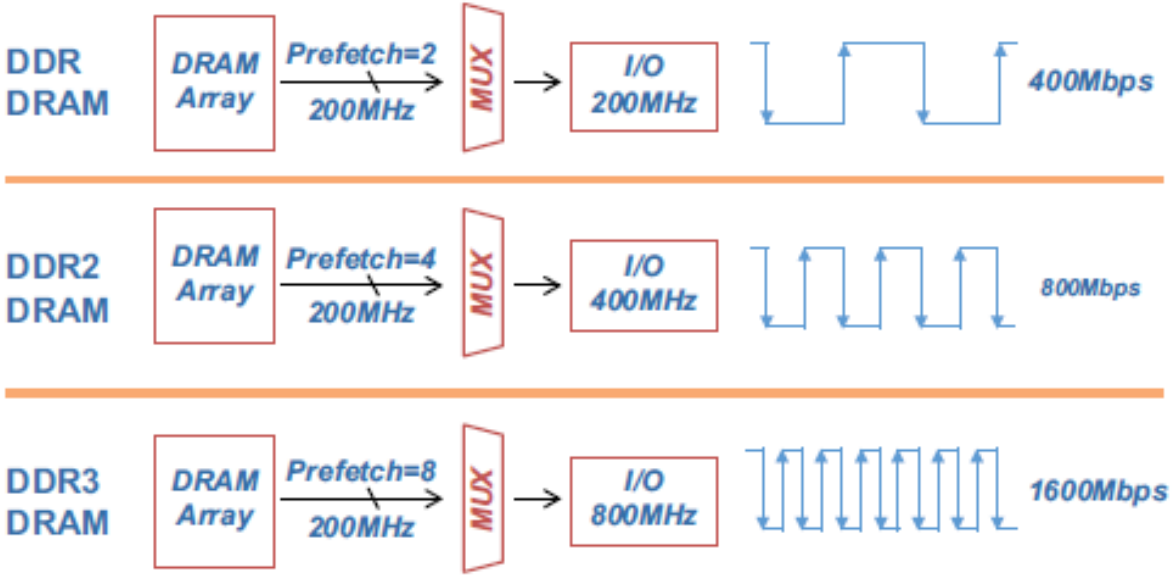

DRAM's I/O throughput went up eightfold (200Mbps → 1600Mbps) while internal bus speed kept unchanged (200MHz).

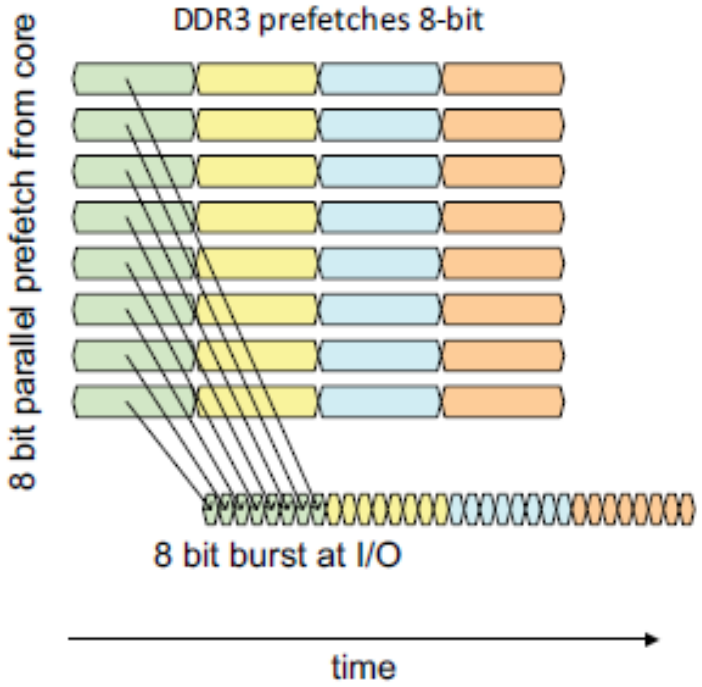

DDR protocol that prefetches bits in parallel and burst with higher I/O clock frequency to increase the I/O bandwidth.

For example, in DDR3, 8 bits are prefetched from multiple columns in one internal clock cycle and stored in prefetch buffer, and they are burst out with 8X higher rate at one pin of the I/O in one interface clock cycle.

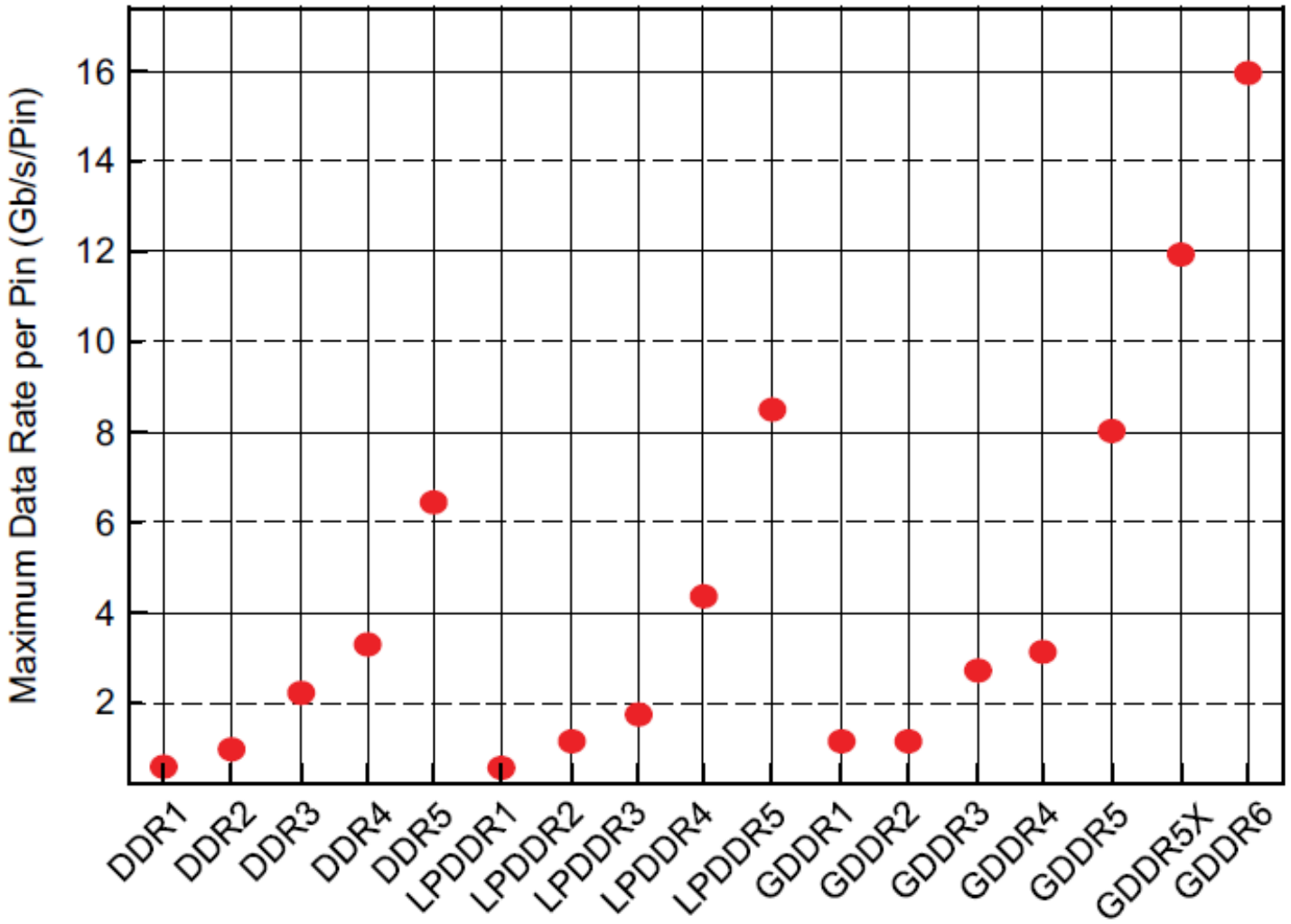
Maximum Data Rate per Pin (Gb/s/Pin)
16
14
12
10
8
6
4
2
DDR1
DDR2
DDR3
DDR4
DDR5
LPDDR1
LPDDR2
LPDDR3
LPDDR4
LPDDR5
GDDR1
GDDR2
GDDR3
GDDR4
GDDR5
GDDR5X
GDDR6

Out of course

Different types of DRAMs

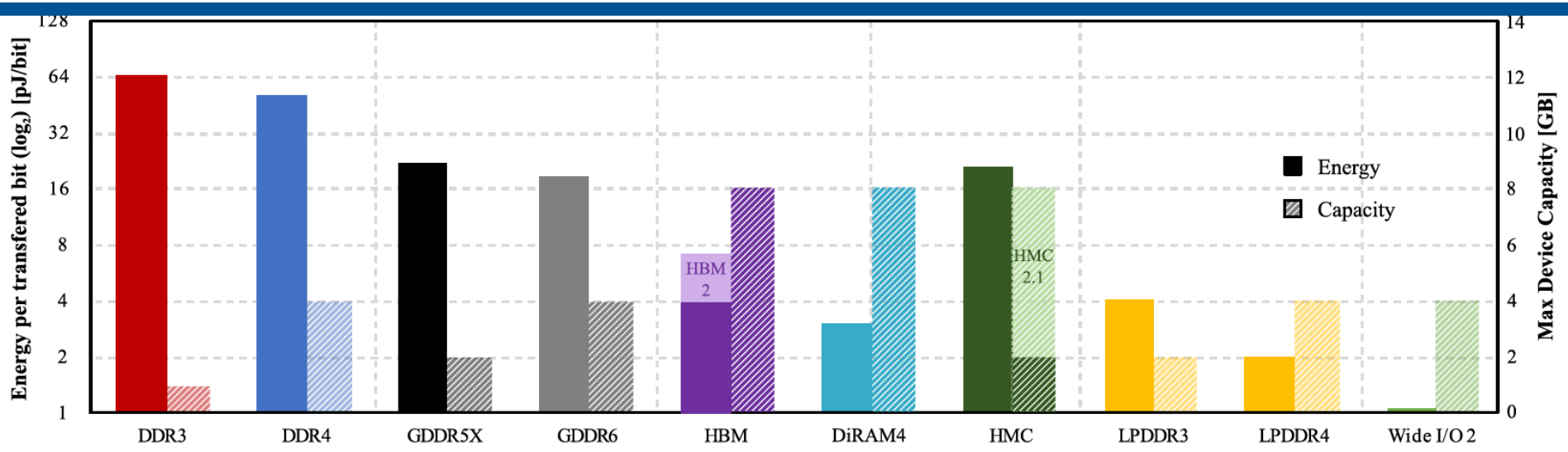

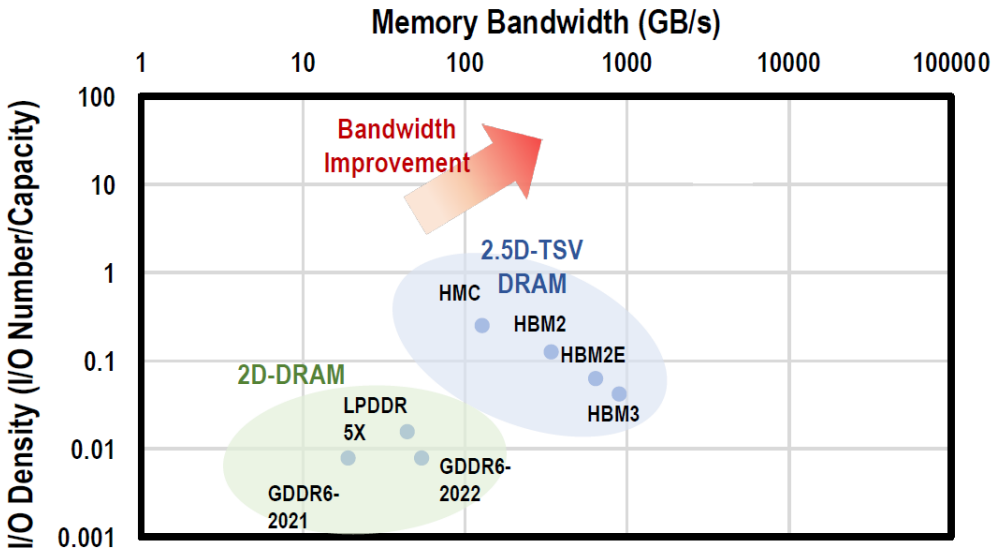

The DDR protocol has a family of variants including LPDDR and GDDR. LPDDR is for low-power mobile platforms, and it is optimized for low leakage with lower supply voltage and long refresh interval.

GDDR is for high-performance graphics platforms, and it is optimized for fast internal clock frequency with a small mat array size.