Understanding separate data/instruction and unified cache

Sparsh Mittal

When is I-cache and D-cache accessed

I-cache is accessed for every instruction
D-cache is accessed whenever data needs to be written-to or read-from memory
Consider this (pseudo)-assembly language code.

```
Loop:  load memory[i] in reg1
       add reg1 and reg2, store result in reg1
       store reg1 in memory[i]
       subtract 4 from reg1
       if reg1 value !=0, goto Loop
```

- In above code: we have 5 instructions and 2 memory accesses.
- ➔ I-cache is accessed 5 times
- D-cache is accessed 2 times

Why separate I and D cache?

- Instruction accesses shows high spatial locality
- For code without control-flow changing instructions, I-cache has high hit-rate
- Data accesses do not have as high spatial locality

- Clearly, access pattern of I-cache and D-cache are different
- Hence, **we use separate I-cache and D-cache at L1 level.**

- After L1-I cache, very few instruction accesses go to L2 level.
- Hence, **we generally use unified L2 cache.**

Separate vs Unified Cache

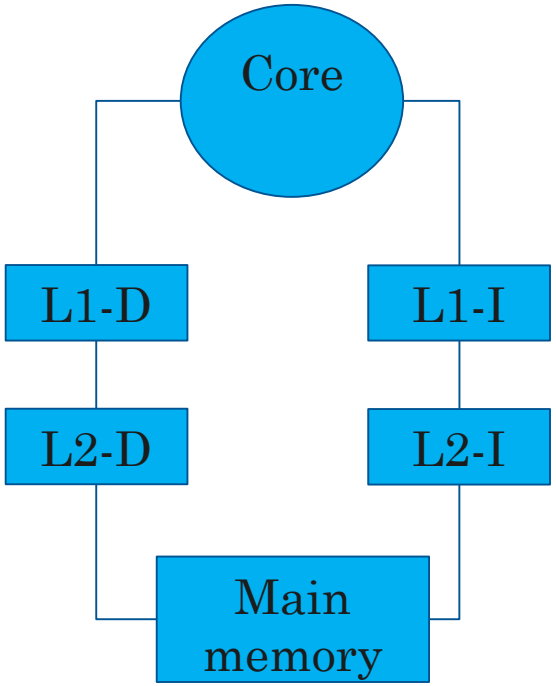

Separate I/D at L1
Separate I/D at L2

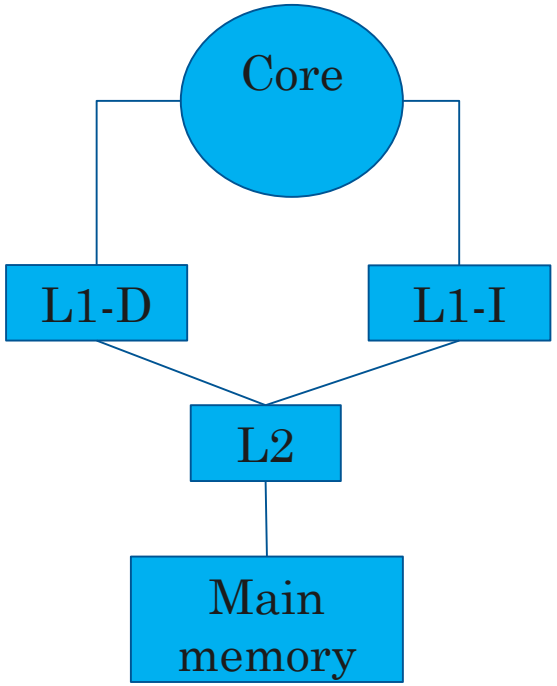

Separate I/D at L1
Unified L2

Let us compute the number of accesses and miss-ratios for each of these designs.

Separate L1(D/I), Unified L2

Let accesses to L1-D cache = Xd
Let misses in L1-D cache = Md and Hits = Xd-Md
=> accesses to L2 cache from L1-D cache= Md

Let accesses to L1-I cache = Xi
Let misses in L1-I cache = Mi and Hits = Xi-Mi
=> accesses to L2 cache from L1-I cache= Mi

Since the L2 cache is unified, it will receive accesses from both L1-I and L1-D cache. So, Total access to L2 cache = Md+Mi

Separate L1(D/I), Unified L2

Let, misses from L2 cache = K and Hits = Md+Mi-K

So, for L1-D cache, local miss rate is same as global miss rate and is equal to Md/Xd.
Similarly, for L1-I cache, local miss rate is same as global miss rate and is equal to Mi/Xi.

For L2 cache, local miss-rate = K/(Md+Mi)
For L2 cache, global miss-rate = K/(Xd+Xi)

Separate L1(D/I), L2(D/I)

- Since L2-D and L2-I caches are separate, they will separately receive accesses from L1-I and L1-D cache.
- Total access to L2-D cache = Md
- Total access to L2-I cache = Mi
- Let misses to L2-D and L2-I are Kd and Ki, resp.
- Local Miss rate of L2-D = Kd/Md and L2-I=Ki/Mi
- Global miss-rate of L2-D=Kd/Xd and L2-I=Ki/Xi