Tensor Cores in GPUs

Sparsh Mittal

Image Courtesy: https://devblogs.nvidia.com/parallelforall/inside-volta/

Definitions of MAC and FMA

- Multiply–accumulate (MAC) or multiply-add (MAD) computes the product of two numbers and adds that product to an accumulator.
- The hardware unit that performs this MAC operation is known as a MAC unit
- $a \leftarrow a + (b*c)$
- When operands are floating point numbers, it may be done with either one or two rounding operations. When performed with a single rounding, it is called a fused multiply–add (FMA) or fused multiply–accumulate (FMAC).

MAD vs. FMA

Multiply-Add (MAD):

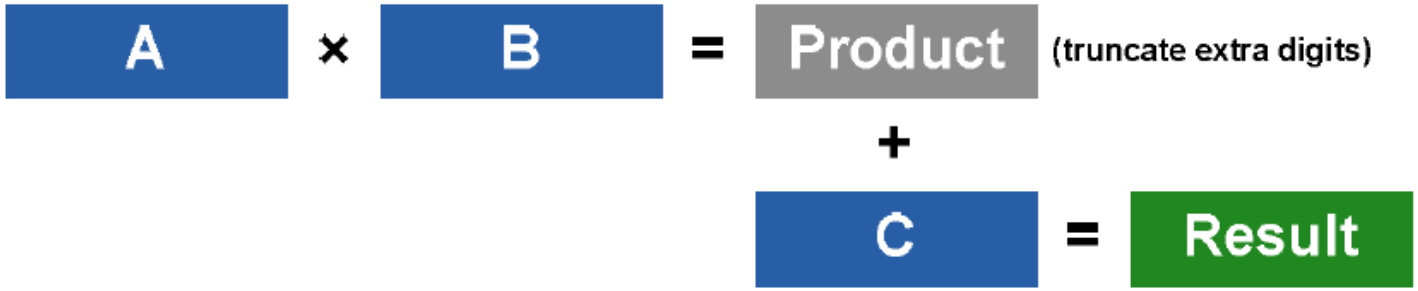

Fused Multiply-Add (FMA)

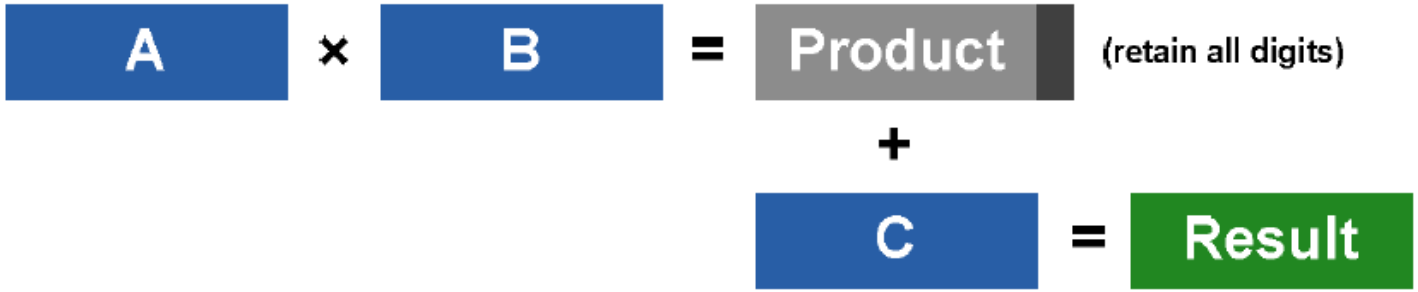

https://www.nvidia.com/content/PDF/fermi_white_papers/NVIDIA_Fermi_Compute_Architecture_Whitepaper.pdf

Simplified Nvidia A100 GPU organization

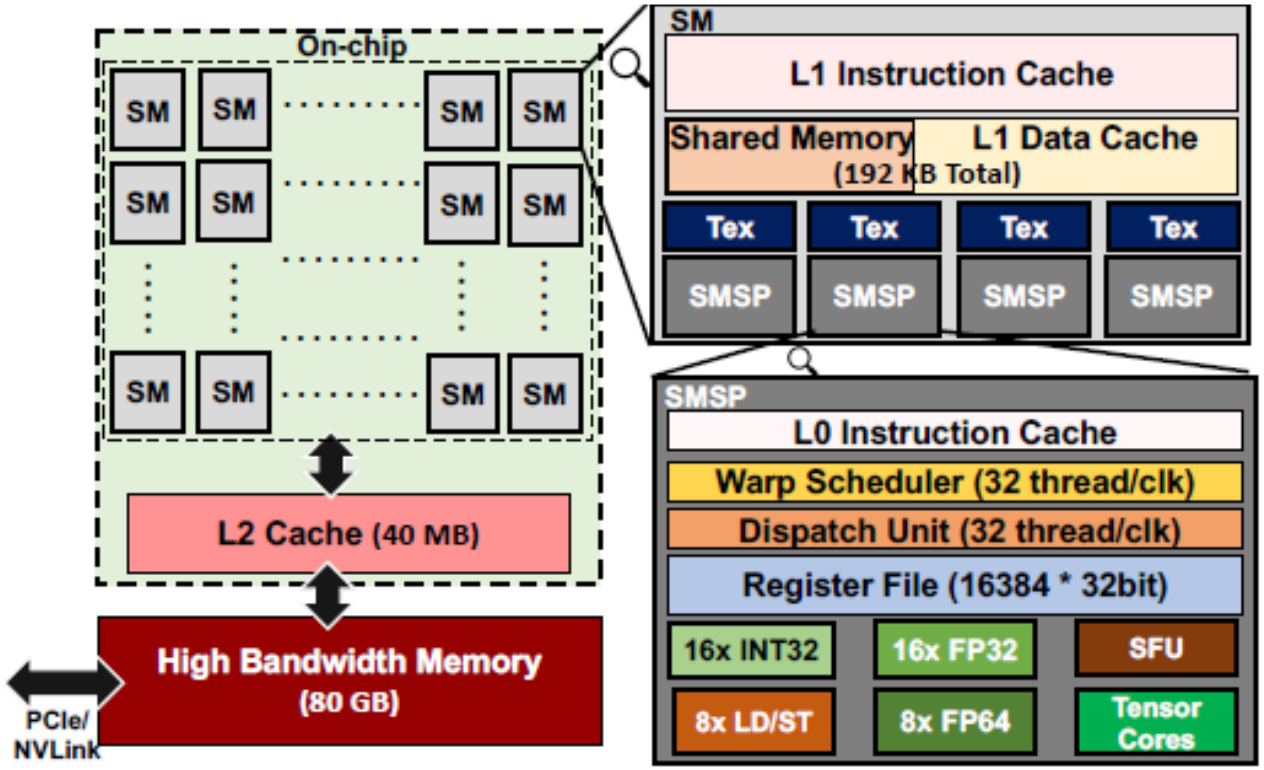

Streaming multiprocessor in Ampere GPU
It has 4 streaming processors

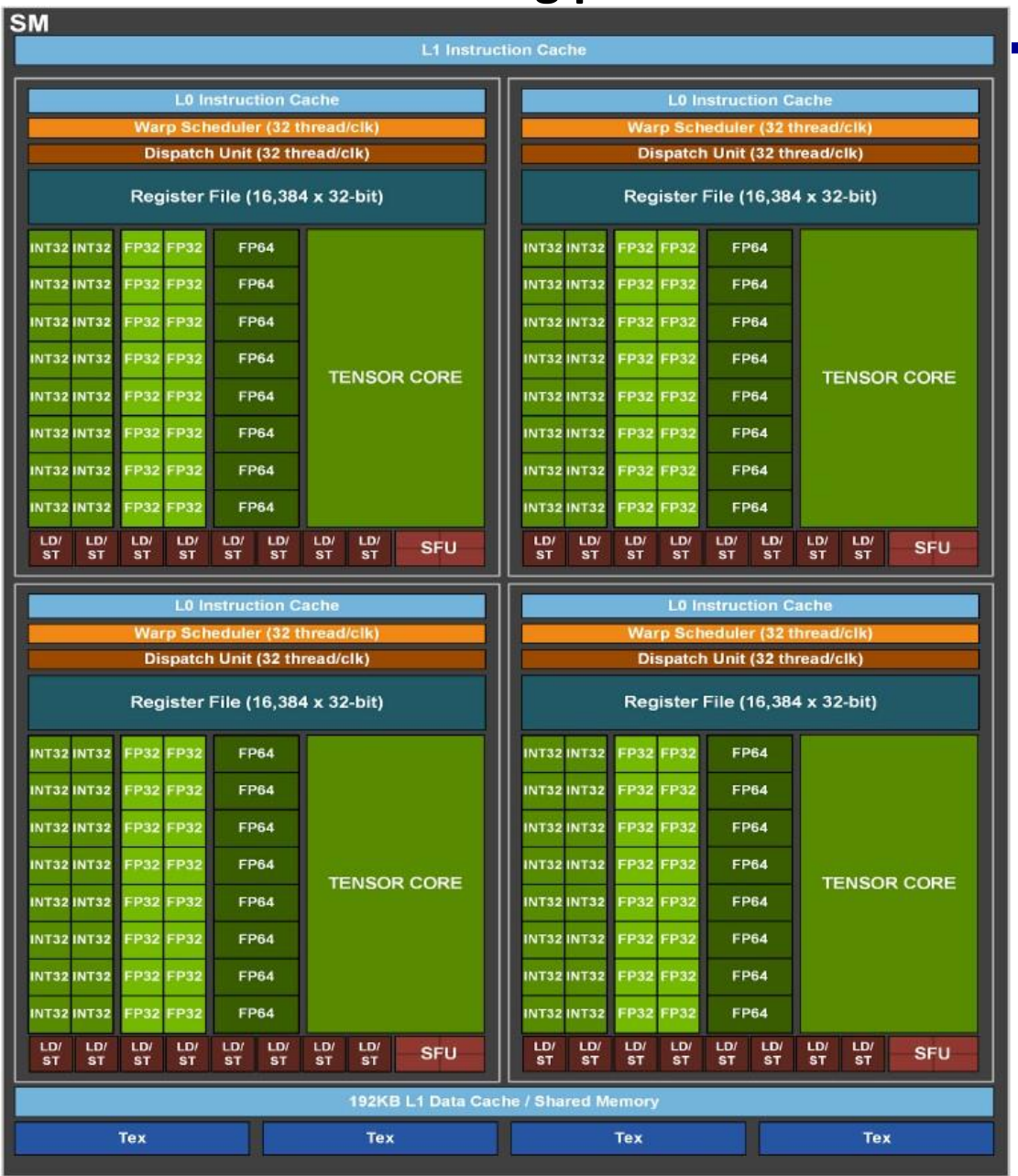

Streaming multiprocessor in Volta GPU
It has 4 streaming processors

NVIDIA Volta GV100 GPU

- Released May 2017
  - Total 80 SM (Stream Multiprocessors)
- Total number of cores
  - 5120 FP32 cores
    - Can do FP16 also
  - 5120 INT32 cores
  - 2560 FP64 cores
  - 640 Tensor cores

https://devblogs.nvidia.com/parallelforall/inside-volta/

Tensor Cores

Key ideas:

- Tensor cores work directly on matrices, not on scalar or vector.
- Tensor cores work with mixed precision.
- Due to these reasons, they provide high performance.

CPU vs GPU vs TPU [1/2]

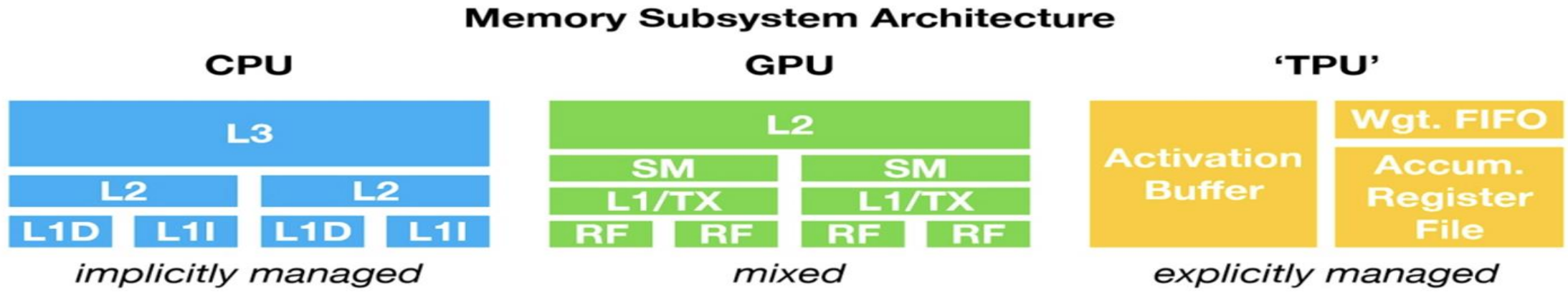

- CPU has hardware-managed (also called implicitly managed) memories.
- TPU has software-managed (also called explicitly managed) memories.
- GPU has both hardware-managed and software-managed memories.

FIFO – First-in-first-out

CPU vs GPU vs TPU [2/2]

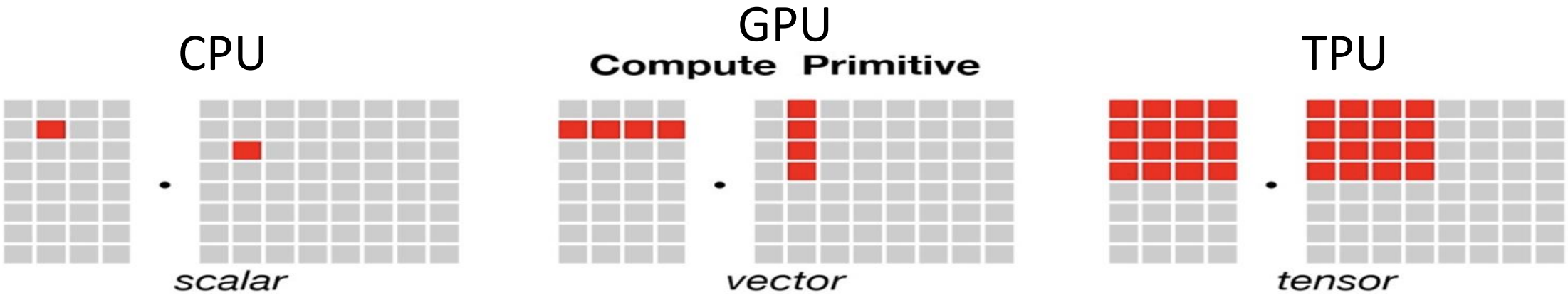

- Conventional CPUs operated on scalar operands
  - Modern CPUs operate on vectors and tensors also
- In GPUs, CUDA cores operate on vector operands
  - Tensor cores in GPUs operate on tensors (matrices)
- TPUs operate on tensor (matrices) operands

Tensor Core Operation

- D = AxB + C, all 4x4 matrices

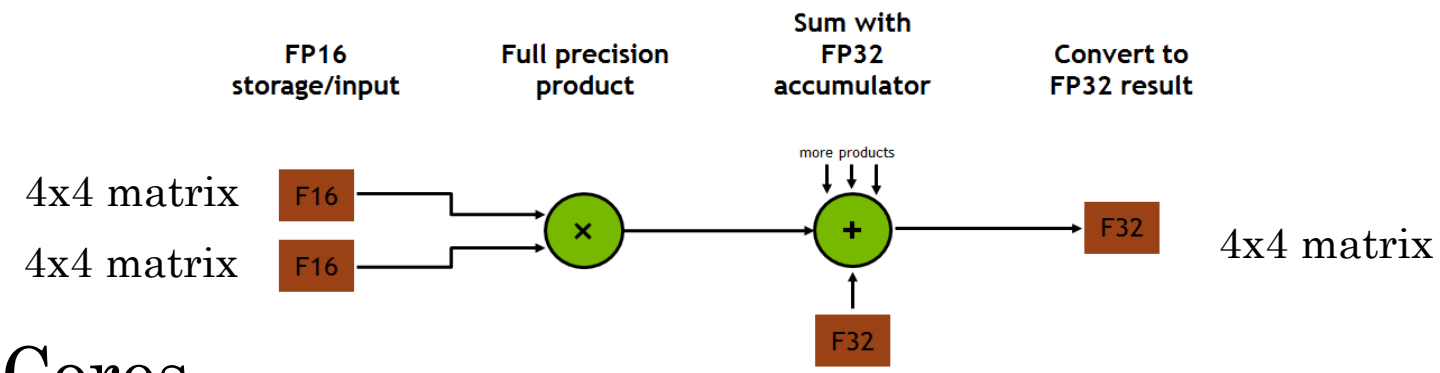

Tensor Cores

- Take 4x4 input matrices in half floating-point precision (FP16)
- Perform matrix multiplication in half precision
- Produce a 4x4 output matrix in single precision (FP32)
- Accumulate it with a 4x4 FP32 matrix

https://devblogs.nvidia.com/parallelforall/inside-volta/

Computing Peak Performance

- Tensor core performs one matrix-multiply-and-accumulate operation on a 4*4 matrix in one GPU clock cycle.
- Thus, it performs 64 floating-point Fused-Multiply-Add (FMA) operations in each cycle.
  - Output has 16 elements and computing each element requires 4 FMA operations
- FMA performs only one rounding operation instead of two, resulting in a more accurate output
- Base frequency = 1.3, can be boosted to 1.53 GHz.
- Each FMA equals two operations
- Tesla V100 GPU has 640 Tensor Cores, so its theoretical peak performance is

  $640*1.53*64*2 * 10^9 = 125$ Tflops/s

Turing Tensor Cores

- Turing Tensor Cores are significantly more exciting than Volta Tensor Cores

- Turing Tensor Core design adds INT8 and INT4 precision modes for inferencing workloads that can tolerate quantization.
- FP16 is also fully supported for workloads that require higher precision.

Comparison

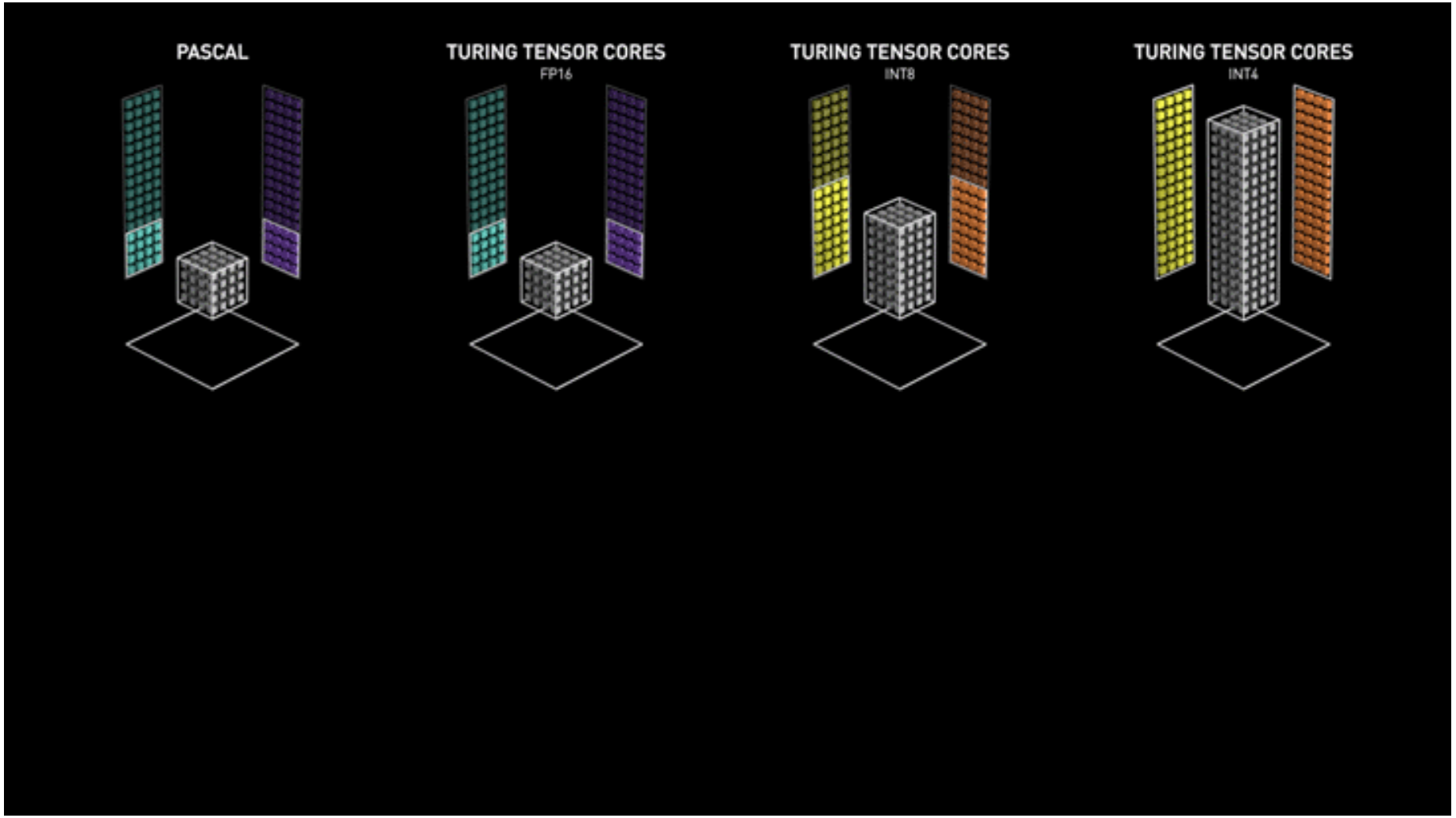

https://developer.nvidia.com/blog/nvidia-turing-architecture-in-depth/

NVIDIA TF32 [sometimes called FP19]

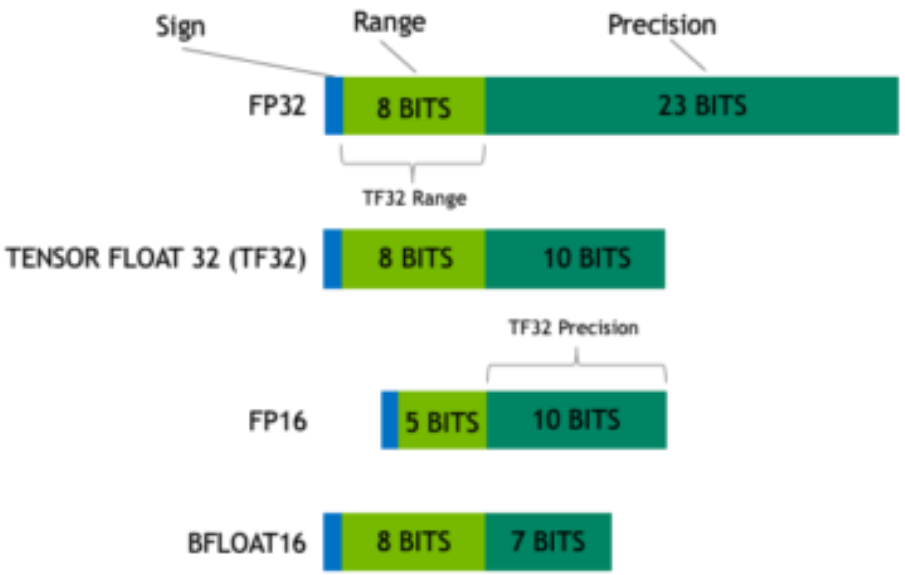

TF32 strikes a balance that delivers performance with range and accuracy

- TF32 uses same 10-bit mantissa as FP16, which has more than sufficient margin for the precision requirements of AI workloads.
- TF32 uses same 8-bit exponent as FP32 so it can support the same numeric range.

https://blogs.nvidia.com/blog/2020/05/14/tensorfloat-32-precision-format/

Ampere GPU

- Ampere microarchitecture added bfloat16 and TF32 [which is just fp19] support to the tensor cores.

Compute capability

Number of MAC operations per clock cycle per SM

	CUDA Cores				Tensor Cores					
NVIDIA Architecture	FP64	FP32	FP16	INT8	FP64	TF32	FP16	INT8	INT4	INT1
Volta	32	64	128	256			512			
Turing	2	64	128	256			512	1024	2048	8192
Ampere (A100)	32	64	256	256	64	512	1024	2048	4096	16384
Ampere, sparse						1024	2048	4096	8192	

Turing GPU: 1350 MHz base clock and 1635 MHz boost clock for the RTX 2080 Ti Founders Edition
The Nvidia GeForce RTX 2080 Ti Founders Edition contains 68 Streaming Multiprocessors (SMs) and 544 tensor cores (8 tensor cores in each SM).

Each MAC means 2 operations, hence, multiply above numbers by 2 to get FLOP counts per clock.
Multiply that by number of SMs and SM clock rate to peak throughput of GPU.
Example: an A100 GPU with 108 SMs and 1.41 GHz clock rate has peak dense throughputs of 156 TF32 TFLOPS and 312 FP16 TFLOPS

- Turing GPU: 1350 MHz base clock and 1635 MHz boost clock for the RTX 2080 Ti Founders Edition
- The Nvidia GeForce RTX 2080 Ti Founders Edition contains 68 Streaming Multiprocessors (SMs) and 544 tensor cores (8 tensor cores in each SM).

- Peak performance = $2*512*68*1635*10^6$ = 113.8 TFLOPS

The GeForce RTX 2080 Ti Founders Edition GPU delivers the following exceptional computational performance:

- 14.2 TFLOPS[1] of peak single precision (FP32) performance
- 28.5 TFLOPS[1] of peak half precision (FP16) performance
- 14.2 TIPS[1] concurrent with FP, through independent integer execution units
- 113.8 Tensor TFLOPS[1,2]
- 10 Giga Rays/sec
- 78 Tera RTX-OPS[3]

- When math operations cannot be formulated in terms of matrix blocks they are executed in other CUDA cores.
- For example, the element-wise addition of two half-precision tensors would be performed by CUDA cores, rather than Tensor Cores.

	Blackwell	Hopper
Supported Tensor Core precisions	FP64, TF32, BF16, FP16, FP8, INT8, FP6, FP4	FP64, TF32, BF16, FP16, FP8, INT8
Supported CUDA® Core precisions	FP64, FP32, FP16, BF16	FP64, FP32, FP16, BF16, INT8

Tesla Model	P4	P40	P100	P100	P100	V100	V100	V100	T4	A100	A100
Bus	PCI-E 3.0	PCI-E 3.0	PCI-E 3.0	PCI-E 3.0	SXM	HGX-1	PCI-E 3.0	SXM2	PCI-E 3.0	PCI-E 4.0	SXM4
GPU	GP104	GP102	GP100	GP100	GP100	GV100	GV100	GV100	TU104	GA100	GA100
FP32 Cores	2,560	3,840	3,584	3,584	3,584	5,120	5,120	5,120	2,560	6,912	6,912
FP64 Cores	640	960	1,792	1,792	1,792	2,560	2,560	2,560	–	3,456	3,456
Tensor Cores	–	–	–	–	–	640	640	640	320	432	432
Base Core Clock Speed	810 MHz	1,303 MHz	1,126 MHz	1,126 MHz	1,328 MHz	***823 MHz***	***1,097 MHz***	***1,372 MHz***	585 MHz	***1,265 MHz***	***1,265 MHz***
GPU Boost Clock Speed	1,063 MHz	1,531 MHz	1,303 MHz	1,303 MHz	1,480 MHz	***918 MHz***	***1,224 MHz***	1,530 MHz	1,590 MHz	1,410 MHz	1,410 MHz
SMs	20.0	30.0	56.0	56.0	56.0	80	80	80	40	108	108
Base FP16 Tensor Core FP16 ACC, Teraflops	–	–	–	–	–	*	*	*	*	*	*
Peak FP16 Tensor Core FP16 ACC, Teraflops	–	–	–	–	–	***100.0***	112.0	125.0	65.1	312/624	312/624
Base FP16 Tensor Core FP32 ACC, Teraflops	–	–	–	–	–	*	*	*	*	*	*
Peak FP16 Tensor Core FP32 ACC, Teraflops	–	–	–	–	–	***100.0***	112.0	125.0	65.1	312/624	312/624
Base BF16 Tensor Core FP32 ACC, Teraflops	–	–	–	–	–	–	–	–	–	*	*
Peak BF16 Tensor Core FP32 ACC, Teraflops	–	–	–	–	–	–	–	–	–	312/624	312/624
Base TF32 Tensor Core, Teraflops	–	–	–	–	–	–	–	–	–	*	*
Peak TF32 Tensor Core, Teraflops	–	–	–	–	–	–	–	–	–	156/312	156/312
Base FP64 Tensor Core, Teraflops	–	–	–	–	–	–	–	–	–	*	*
Peak FP64 Tensor Core, Teraflops	–	–	–	–	–	–	–	–	–	19.5	19.5
Base INT8 Tensor Core, Teraops	–	–	–	–	–	–	–	–	–	*	*
Peak INT8 Tensor Core, Teraops	–	–	–	–	–	–	–	–	–	624/1,248	624/1,248
Base INT4 Tensor Core, Teraops	–	–	–	–	–	–	–	–	–	*	*
Peak INT4 Tensor Core, Teraops	–	–	–	–	–	–	–	–	–	1,248/2,496	1,248/2,496
Base INT8, Teraops	16.6	40.0	–	–	–	*	*	*	*	–	–
Peak INT8, Teraops	21.8	47.0	–	–	–	***50.2***	56.0	62.8	130.0	–	–
Base INT4, Teraops	16.6	40.0	–	–	–	*	*	*	*	–	–
Peak INT4, Teraops	21.8	47.0	–	–	–	***25.0***	28.0	31.2	260.0	–	–
Base FP16, Teraflops	–	–	*	*	*	*	*	*	–	*	*
Peak FP16, Teraflops	–	–	18.7	18.7	21.2	***25.1***	28.0	31.4	–	78.0	78.0
Base BF16, Teraflops	–	–	*	*	*	*	*	*	–	*	*
Peak BF16, Teraflops	–	–	18.7	18.7	21.2	***12.5***	14.0	15.6	–	39.0	39.0
Base FP32, Teraflops	*	*	*	*	*	*	*	*	*	*	*
Peak FP32, Teraflops	5.5	11.8	9.3	9.3	10.6	***12.6***	14.0	15.7	8.1	19.5	19.5
Base FP64, Teraflops	*	*	*	*	*	*	*	*	–	*	*
Peak FP64, Teraflops	0.2	0.4	4.7	4.7	5.3	***6.2***	7.00	7.80	0.25	9.70	9.70
Base INT32, Teraops	–	–	–	–	–	–	–	–	–	*	*
Peak INT32, Teraops	–	–	–	–	–	***12.6***	14.00	15.70	–	19.50	19.50
GDDR5 or GDDR6/HBM2 Memory	8 GB	24 GB	12 GB	16 GB	16 GB	16 GB	16/32 GB	16/32 GB	16 GB	40 GB	40 GB
Memory Clock Speed	3.0 GHz	3.6 GHz	703 MHz	703 MHz	703 MHz	877.5 MHz	877.5 MHz	877.5 MHz	1,250 MHz	1,215 MHz	1,215 MHz
Memory Bandwidth	192 GB/sec	346 GB/sec	540 GB/sec	720 GB/sec	720 GB/sec	900 GB/sec	900 GB/sec	900 GB/sec	320 GB/sec	1,555 GB/sec	1,555 GB/sec
Power Draw	50/75 W	250 W	250 W	250 W	300 W	150 W	250 W	300 W	70 W	400 W	400 W
* *Base Teraops or Teraflops unknown*											

Tensor cores used in real-world

- https://azure.microsoft.com/en-in/blog/bing-delivers-its-largest-improvement-in-search-experience-using-azure-gpus/