ADC (Analog to Digital Converter)

Sparsh Mittal

ADC

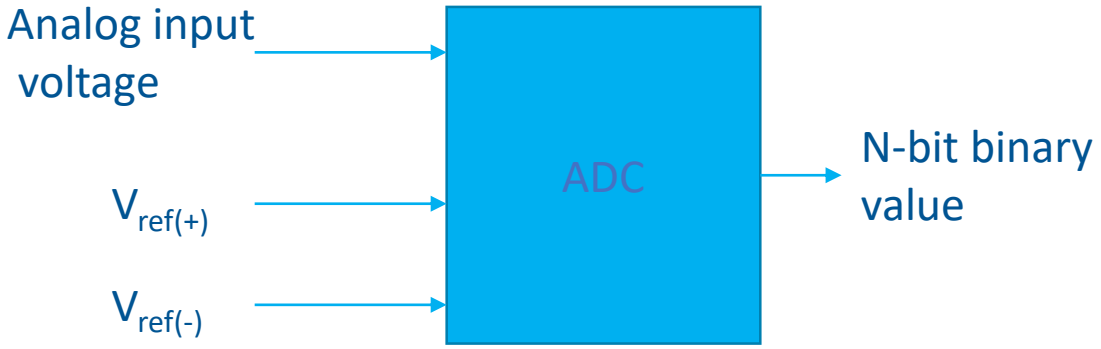
Analog input voltage
$V_{ref(+)}$
$V_{ref(-)}$
ADC
N-bit binary value

DAC

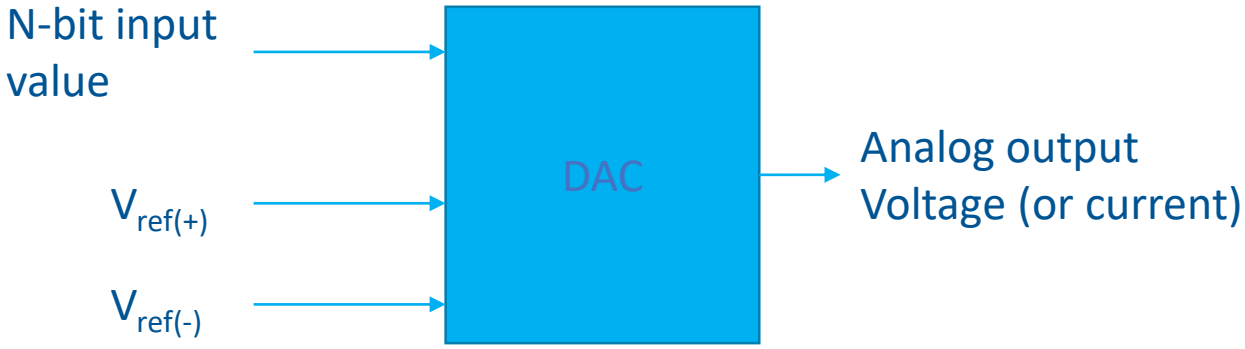
N-bit input value
$V_{ref(+)}$
$V_{ref(-)}$
DAC
Analog output Voltage (or current)

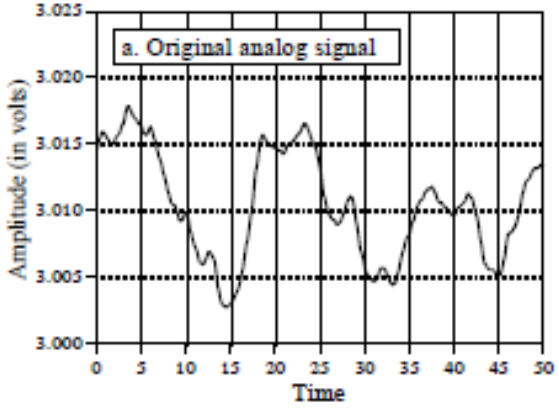

FIGURE 3-1
Waveforms illustrating the digitization process. The conversion is broken into two stages to allow the effects of *sampling* to be separated from the effects of *quantization*. The first stage is the sample-and-hold (S/H), where the only information retained is the instantaneous value of the signal when the periodic sampling takes place. In the second stage, the ADC converts the voltage to the nearest integer number. This results in each sample in the digitized signal having an error of up to ±½ LSB, as shown in (d). As a result, quantization can usually be modeled as simply adding noise to the signal.

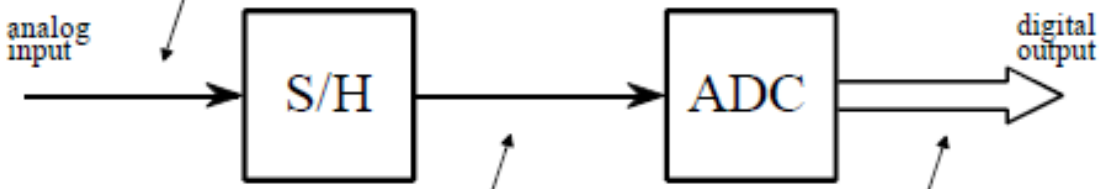

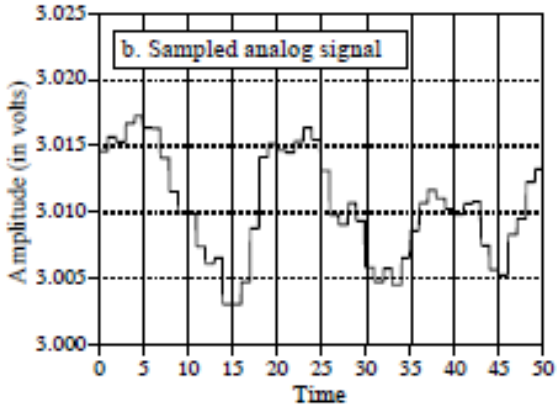

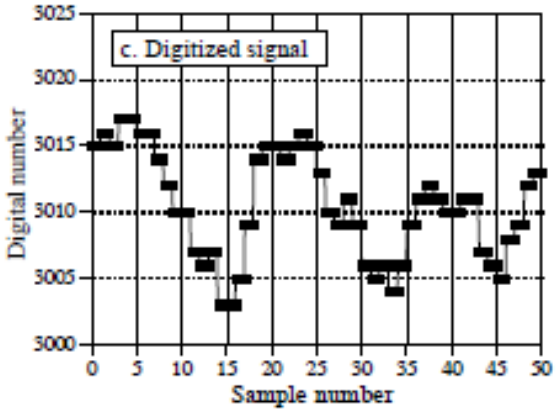

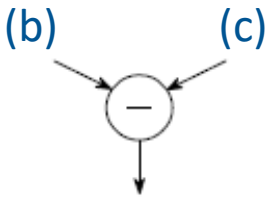

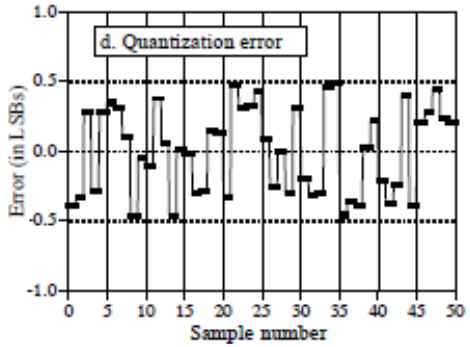

ADC

Analog to digital conversion involves sampling and quantization.

Analog signals vary continuously and are defined for any interval of time.

Digital signals can take only finite values and are defined only for discrete instant of time.

ADC converts analog signal into steps of 2^n values. Each step is represented by one of 2^n-1 values excluding zero.

ADC resolution is the minimum analog value that can be represented by the digital data.

If the ADC gives n-bit digital output and the reference voltage is V_{ref}, then

Resolution = $V_{ref}/2^n$ volts

Full-scale value

Full-scale value is the maximum value of analog voltage that can be represented in digital.

Full-scale value is one step less than reference value.

Full-scale value = V_{ref}-resolution

Since number of steps of analog values is 2^n-1, full-scale value is the product of number of steps and resolution.

Full-scale value = NumberOfSteps * StepSize

= (2^n-1)*StepSize

Conversion error

$$\text{DigitalData} = \frac{Vin}{Resolution} - Error$$

$$= \frac{Vin * 2^n}{Vref} - Error$$

The error is within 0 to 1.

Error is zero when Vin is an exact multiple of resolution.

Error is 1 when Vin = Vref.

Example

Resolution of 12-bit ADC is 10mV. Find full-scale range.

Answer: Number of steps = 2^n-1 = 4095

Full-scale range = NumberOfSteps * Resolution

= 4095* 10mV = 40.95V

Example

The reference voltage of 8-bit ADC is 3.84V. Find resolution and digital data for an input of 2.56V.

Answer: Resolution = Vref/2^n

= 3.84/256 V= 0.015V = 15mV

DigitalData = $\frac{Vin}{Resolution} - Error$ = 2.56/0.015 - Error

= 170.66-Error.

So, the error is 0.66. Now, DigitalData = 170_{10} = 10101010_2

Flash ADC

Key idea

It uses parallel differential comparators that compare various steps of reference voltages with the analog input voltage.

The n-bit flash ADC has 2^n resistors and 2^n -1 comparators.

2^n resistors are connected in series with reference voltage to create a voltage divider network.

Every comparator has 2 inputs: input voltage and step voltage.

Comparator output is high if the input> step value of reference.

Step output is connected to priority encoder to generate n-bit output corresponding to the highest order whose output is 1.

2-bit ADC

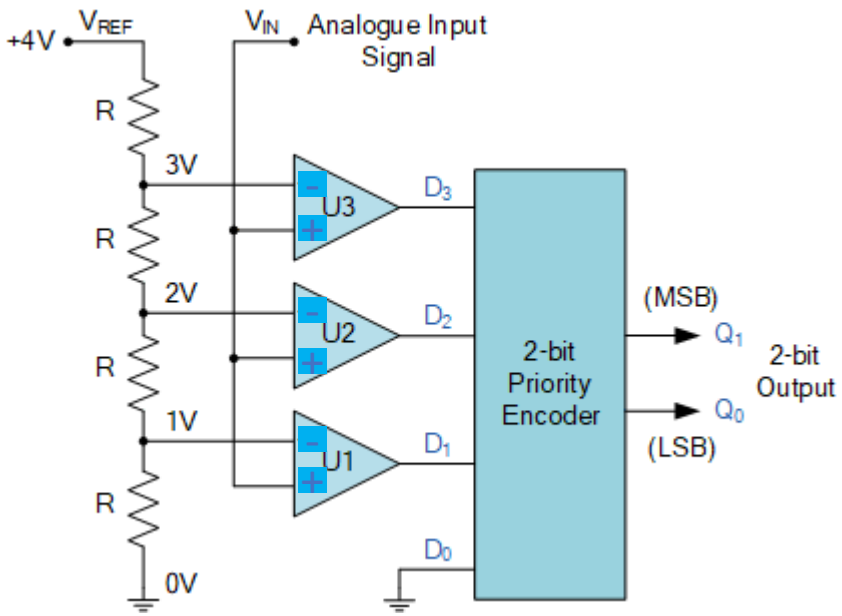

Analogue Input Voltage (V_{IN})	Comparator Outputs				Digital Outputs	
	D_3	D_2	D_1	D_0	Q_1	Q_0
0 to 1 V	0	0	0	**0**	0	0
1 to 2 V	0	0	**1**	X	0	1
2 to 3 V	0	**1**	X	X	1	0
3 to 4 V	**1**	X	X	X	1	1

2-bit ADC: Explanation

The input voltage V_{IN} is between 0 and 4 volts, so have set V_{REF} and the resistive voltage-divider network to drop 1 volt across each resistor.

The priority encoders output corresponds to the currently active input which has the highest priority.

Thus when an input with a higher priority (D_1 compared to D_0) is present, all other inputs with a lower priority will be ignored.

3-bit ADC (Requires 7 comparators)

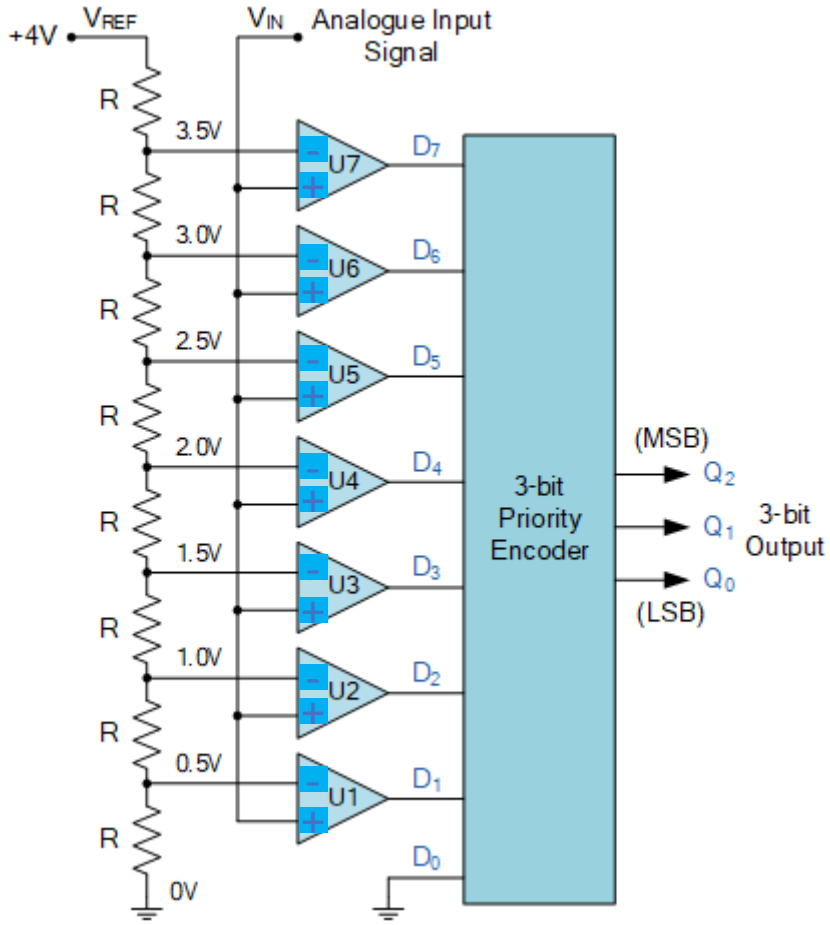

Analogue Input Voltage (V_{IN})	Comparator Outputs								Digital Outputs		
	D_7	D_6	D_5	D_4	D_3	D_2	D_1	D_0	Q_2	Q_1	Q_0
0 to 0.5 V	0	0	0	0	0	0	0	**0**	0	0	0
0.5 to 1.0 V	0	0	0	0	0	0	**1**	X	0	0	1
1.0 to 1.5 V	0	0	0	0	0	**1**	X	X	0	1	0
1.5 to 2.0 V	0	0	0	0	**1**	X	X	X	0	1	1
2.0 to 2.5 V	0	0	0	**1**	X	X	X	X	1	0	0
2.5 to 3.0 V	0	0	**1**	X	X	X	X	X	1	0	1
3.0 to 3.5 V	0	**1**	X	X	X	X	X	X	1	1	0
3.5 to 4.0 V	**1**	X	X	X	X	X	X	X	1	1	1

Resolution = 0.5 = 4/8

Pros and Cons

Flash ADC is the fastest ADC.

It does not require any clock signal.

Conversion time depends on delay of comparator and encoder

It requires too many resistors, comparators and large encoder.

Example

A 5-bit flash ADC has reference voltage of 20V. How many comparators and resistors will it use? What is the increment between reference voltage applied to comparator?

Answer: Comparator = 2^5-1 = 31.

Resistors = 32

Increment is same as resolution = $V_{ref}/2^n$

= 20/2^5 = 20/32 = 0.625