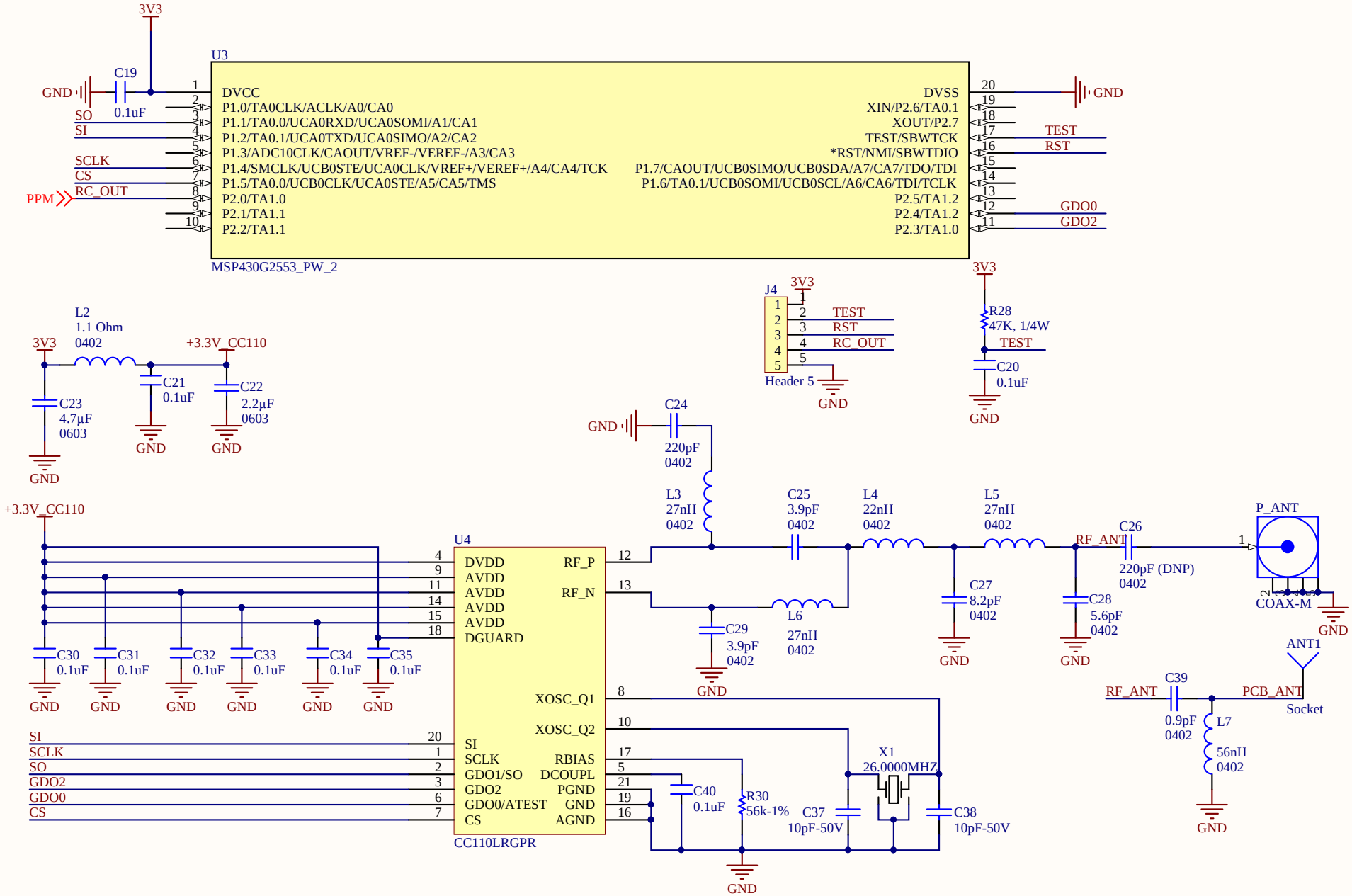

Title		
Size A	Number	Revision
Date: 9/23/2017	Sheet of	
File: C:\Users\minht57\Desktop\RYA\RF.SchDoc	Drawn By:	