Gen Nav Notes

Basics

- Equinoctial and ecliptic at 23.5°
- Compression 0.3% (1/297)
- Equator 21600nm / 40075km
- Polar diameter 12714km
- Equatorial diameter 12756km
- 1° lat near equator < 60nm
- Parallel of Lat is a ***RHUMB LINE***
- Poles are intersection between earth's axis and surface
- ***Apparent Sun is the visible Sun and the mean Sun is a fictitious Sun***
- Mean Sun coincides each year with apparent sun at SPRING EQUINOX and travels along celestial equator at uniform speed
- SUN
    - Perihelion (CLOSEST) 04JAN
    - Aphelion (FARTHEST) 04JUL
- ***Transit between apparent and mean sun greatest across GMeridian in FEB and NOV***
- 1sm = 5280ft
- 1nm = 6080ft / 1852m
- 1km = 3280ft
- Orthodromic line lies closer to the pole
- Geographic = Geodetic data
- Geocentric and geodetic latitudes coincide ONLY at equator and poles
- 2 points have only 1 GC but infinite SC.
- 66° is the highest lat below which sun rises above the horizon and sets everyday. ***(INCORRECT BUT SACAA DATABASE ANSWER)***
- Civil twilight depends on declination of sun and observer latitude
- Seasons are due to inclination of the polar axis with the ecliptic plane

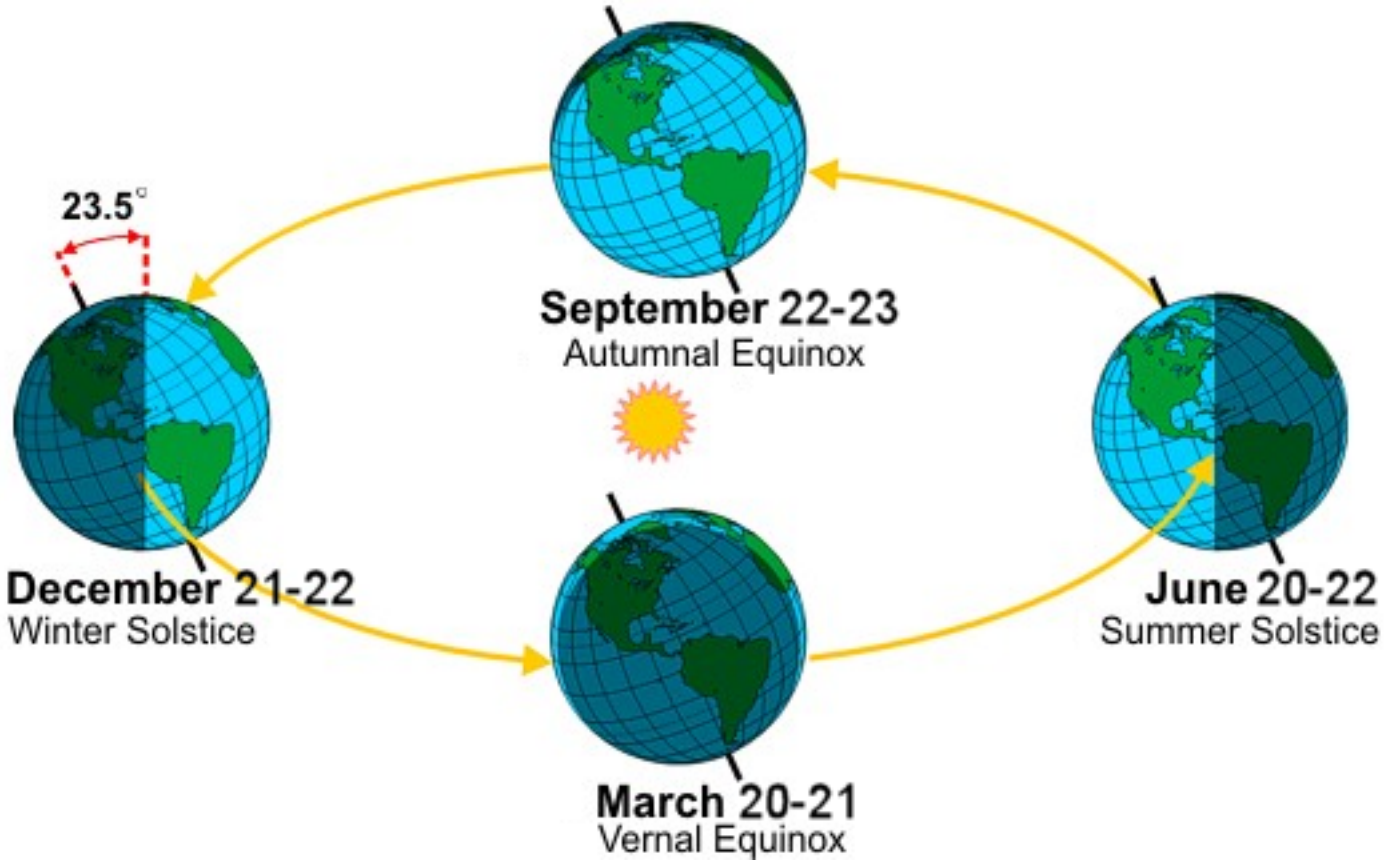


```
Departure = ChLong * cos(LAT) * 60
OR
Departure = ChLat × 60
OR
If cross track
Departure = ChLong * cos(LAT)
```

```
Convergency = ChLong * sin(meanLat)
```

Kepler's Laws

1. All planets move in the elliptical orbits with the sun at one focus
2. All planets sweep out equal areas in equal time intervals which means that planets closer to the sun move faster
3. The square of a planet's orbit period is proportional to the cube of it, semi measure axis **($T^2 \propto R^3$)**

Dead Reckoning 🧭

```
XWind comp = Wind Speed * sin(α)
```

1 in 60 rule

```
Track Error = (Distance Off Track/Distance Flown) * 60

Correction Angle = (Distance Off Track / Distance Left) *
60

Glidepath angle = (Height / Distance) * 60
&
Glidepath% = (Height / Distance)
ROD = GS * Slope%

Descent% = (Alt lost / Dist. Covered) *100

GD = (AD*GS) / TAS
```

Permissible compass deviation is +-(10°)

For multiple flight levels and W/V:
Take 2 levels where we spend highest time and average them out.

Magnetism 🧲

- **Blue pole** is in North Canada
- Variation max 180°
- Slow movement of magnetic poles
- Horizontal component of earth's magnetism is minimum at magnetic poles.
- **Directive force aligns compass needle and max at eqtr.**
- Magnetic north is the direction of the horizontal component of the Earth's magnetic field at that position
- Agonic lines follow separate path out of the north.
- Polar region is one of which is currently running through Western Europe and the other through the USA.
- Isogonic lines converge at the north and South magnetic and geographical poles
- Compass is the most effective about midway between both the poles
- DRC to be swung following a change of magnetic latitude ***OR MAINLY electrical storm or lightning OR hammering.***
- ***Liquid swirl***
    - *Increases if hemisphere and turn direction same*
    - *Decreases if hemisphere and turn direction opposite*
- The annunciator of remote indicating compass system is used when synchronising the magnetic and gyro compass elements
- Permanent magnetism in aircraft due to hammering, effect of earth's magnetic field and under construction
- DRC is made aperiodic (deadbeat) by keeping the assembly close to the compass point

and using damping wires.
- Flux valve detector unit in wingtip

Scale & Projections 📏🗺️

An aeronautical chart is conformal when at any point, the scale over a short distance in the direction of the parallel is equal to the scale in the direction of the Meridian and the Meridians are perpendicular to the parallels

All Mercators have 960nm wide strip of accuracy along the datums.

Normal Mercator (ORTHOMORPHIC NON-PERSPECTIVE)

- Latitudes are parallel increasing spacing away from equator
- Longitudes are parallel and equally spaced
- ***Scale expands with sec(Lat)*** and ***correct at equator***
- Scale within 1% between 8°N/S and 0.5% between 6°N/S
- 0 convergence everywhere and correct at equator

```
Scale(LAT) = SCALE(EQTR) * sec(LAT)
```

```
Scale A / Scale B = cos(LatA) / cos(LatB)
```

Transverse Mercator (ORTHOMORPHIC NON-PERSPECTIVE)

Used for large N/S extent

- Scale correct at meridian of tangency (datum meridian)
- Scale increases away from MOT as sec(arc of E/W GC distance)
- Datum meridian, meridian perpendicular to it, equator are straight lines
- All other meridians are complex curves
- Parallels are ellipses
- Convergence correct at poles and equator
- RL are complex curves
- GC are complex curves except any perpendicular to MOT/DM

- 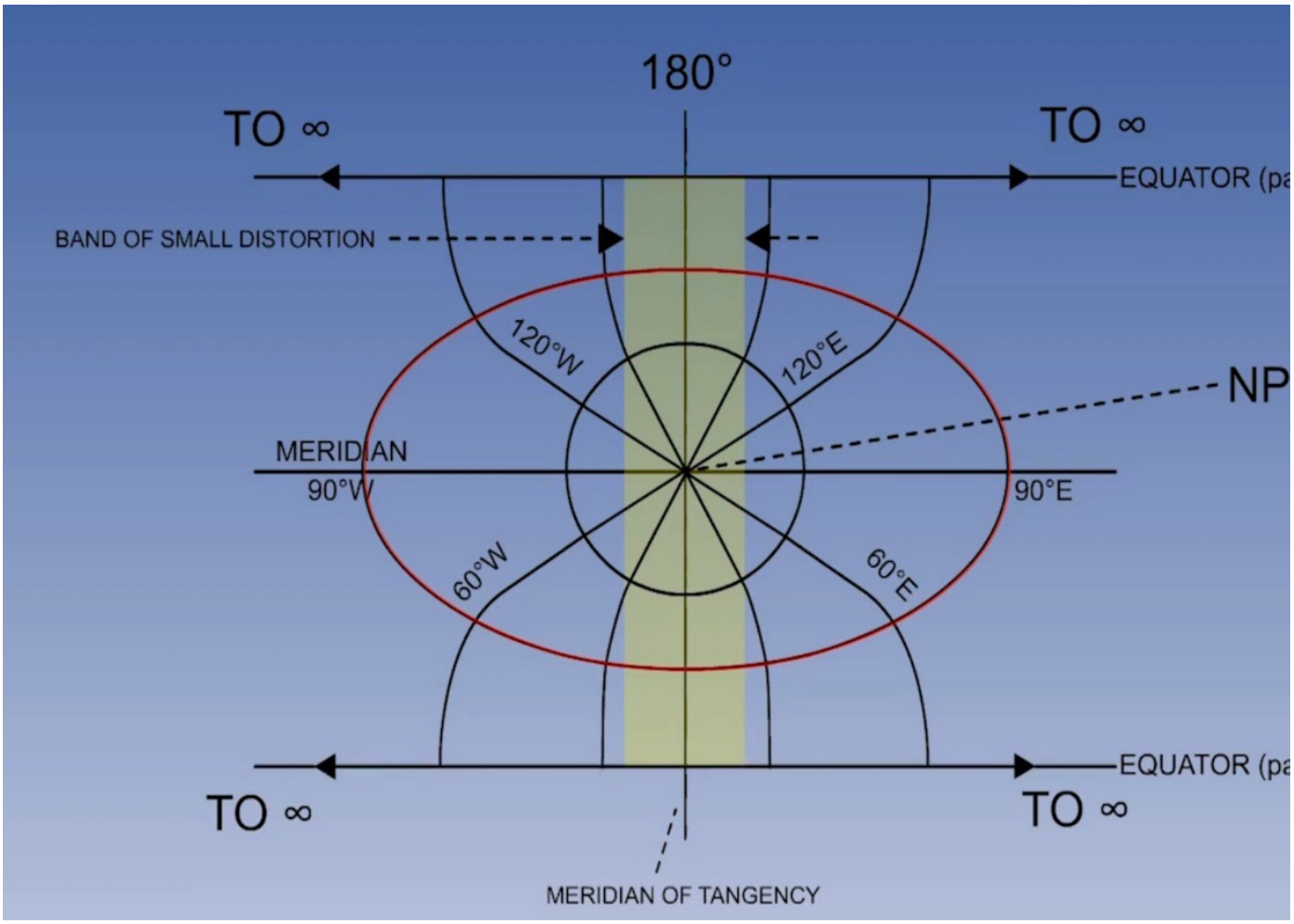

Oblique Mercator (ORTHOMORPHIC NON-PERSPECTIVE)

Used for GC route between 2 points

- ***Datum FALSE EQUATOR (GC of tangency)***
- Scale expands as ***sec(GC distance from Dat.GC)***
- Convergence correct along Dat.GC, poles, and equator
- RL Complex Curves
- GC Complex Curves ***but straight close to Dat.GC***

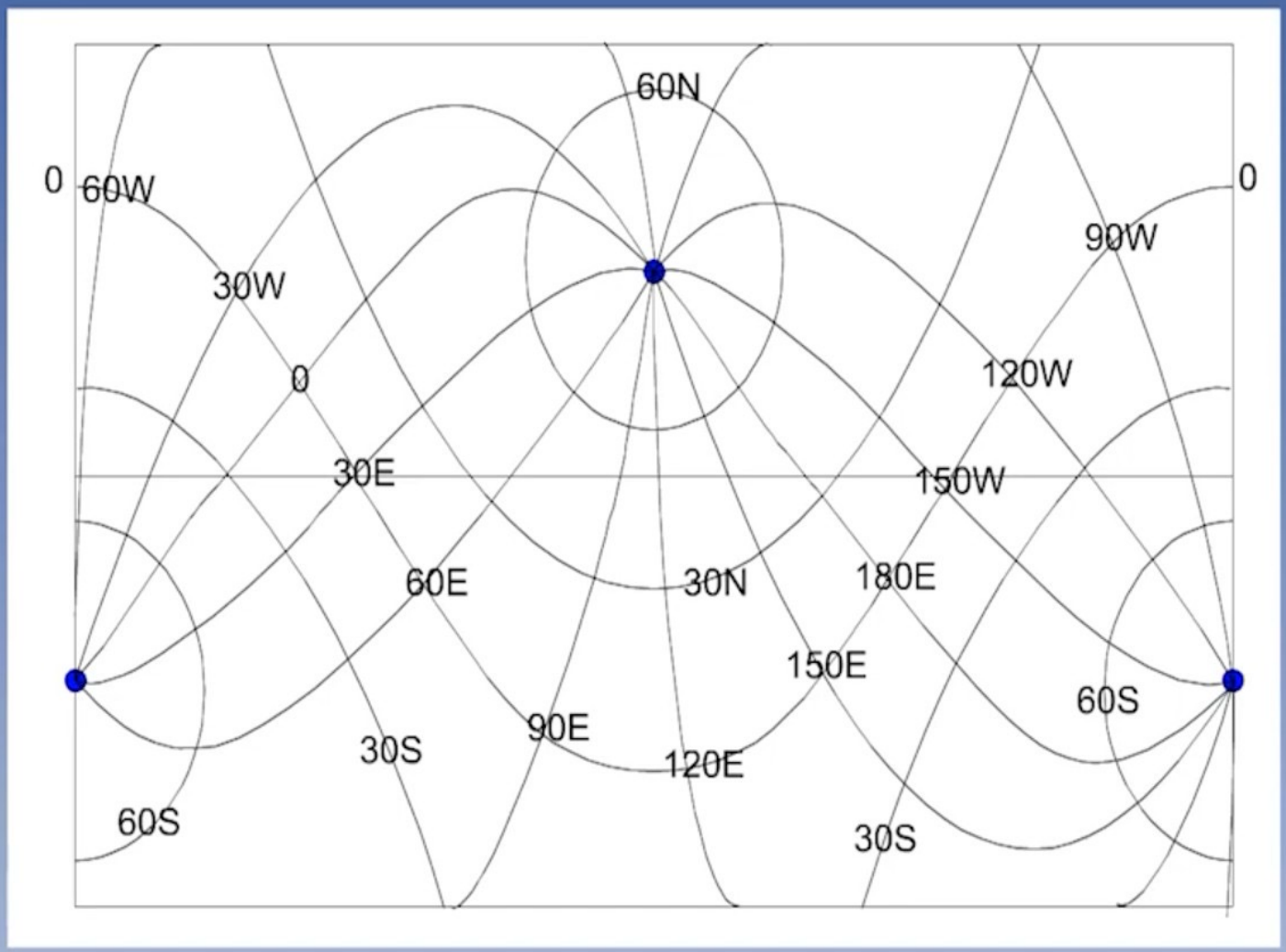

Oblique Mercator.

17:51 Sun Nov 30 74%

exams.aeroversity.co.za

Mercator Charts SUBMIT

17 18 19 20 21 22 23 24 25 26 27 28 29 30 31 32 33 34 35 36 37 38 39 40 41 42 43

Q. 43 of 43 Marks : 3.0

You have skipped this question, you scored 0.00

YOUR TIME 1m 37s ON AVG. TIME 0s

A pilot is tracking the 105 Radial inbound to a VOR in the Northern Hemisphere. The variation is 4ºE at the aircraft's position and 8ºE at the VOR. The convergency between the aircraft's position and the VOR is 6º. What true course from the VOR should be plotted in order to plot a straight line from the VOR to the aircraft on a Direct Mercator chart?

A 105

B 113

C 097

D 116

CLEAR 43 of 43 NEXT

Copyright © Aeroversity ® 2025.All Rights Reserved. Copyright Policy

Simple Conic

- Scale correct at parallel of tangency/origion
- Higher POT, higher sector angle
- Apex angle = 2×POT

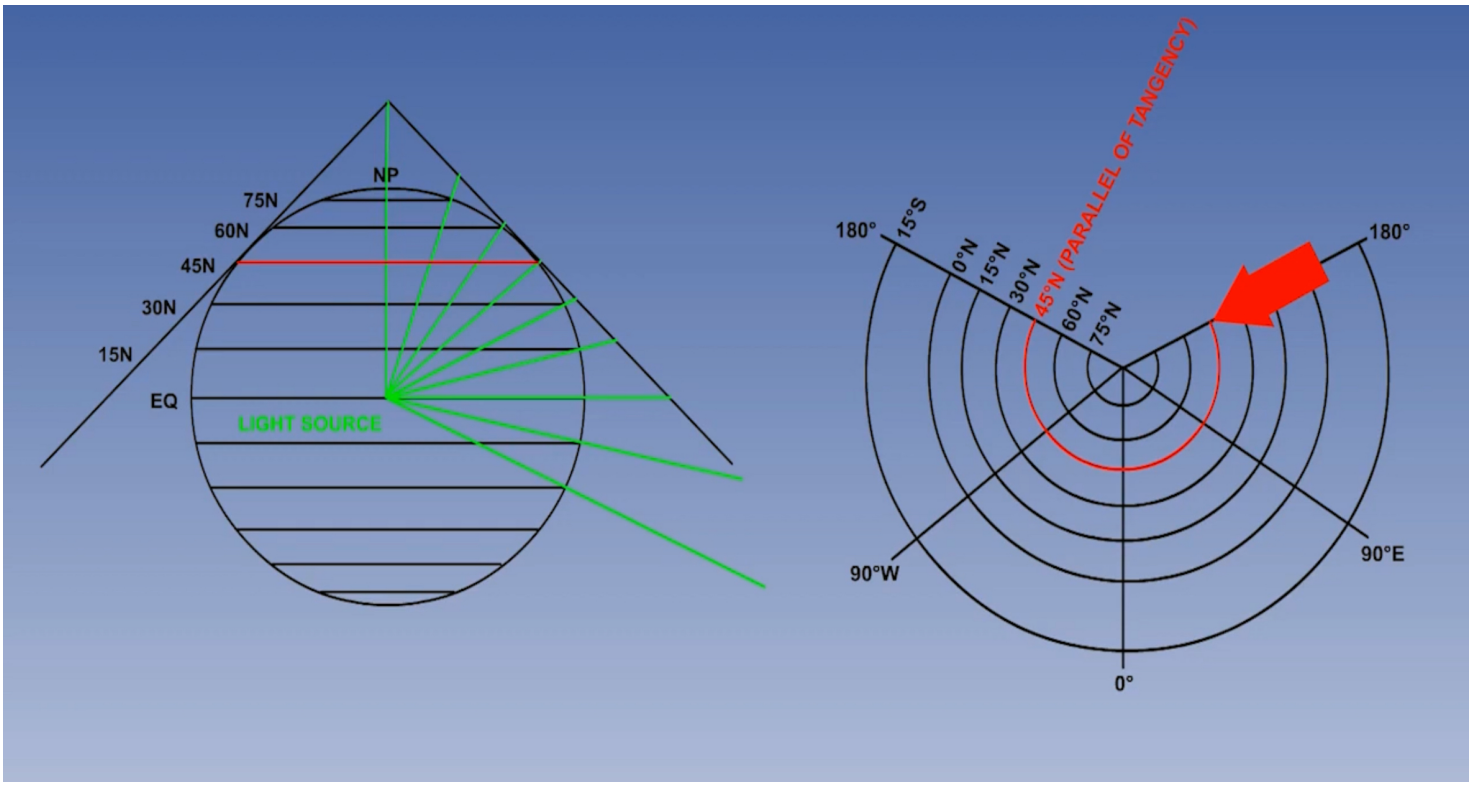

Sector Arc / Convergence = ChLong * sin(POT)

Lambert's Conformal (ORTHOMORPHIC)

- 2 standard parallels as cone goes in
- Scale true at 2 standard parallels (reduces inside and expands outside)
- Scale least at POT and constant at parallel of latitude
- Convergence constant everywhere but correct at POT
- Chart convergency does not change
- Meridians straight from pole diverging
- Latitudes concentric circles
- RL & GC concave to POT
- Scale differs less than 1% from the stated scale of the chart between the two standard parallels
- Produced mathematically to maintain conformality
- ***A straight line will approximate to a great circle course, if the straight line is close to the parallel of origin***

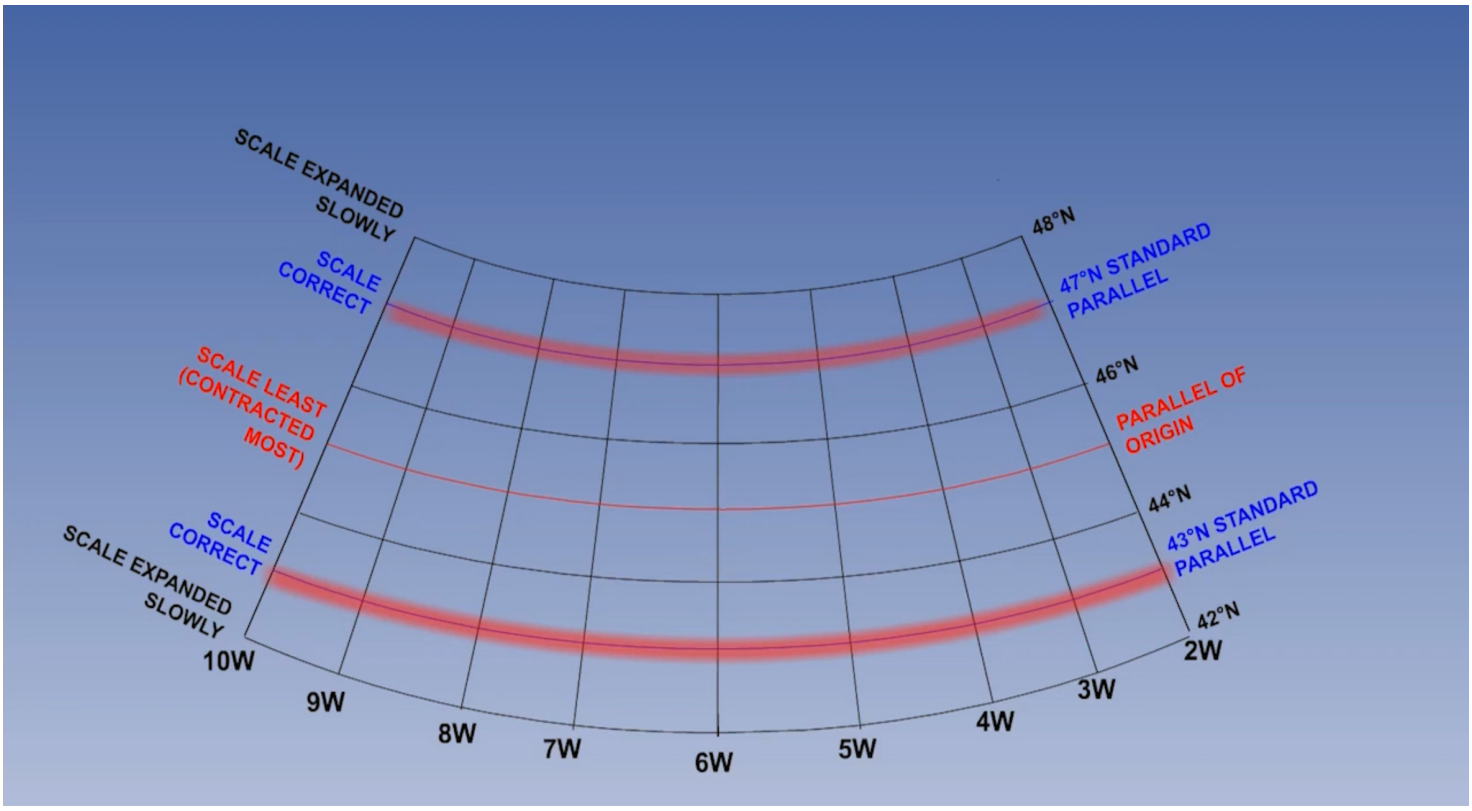

Sector Arc / Convergence = ChLong * sin(POT)

Constant = sin(POT)

Convergence

RL track = Avg. GC Track

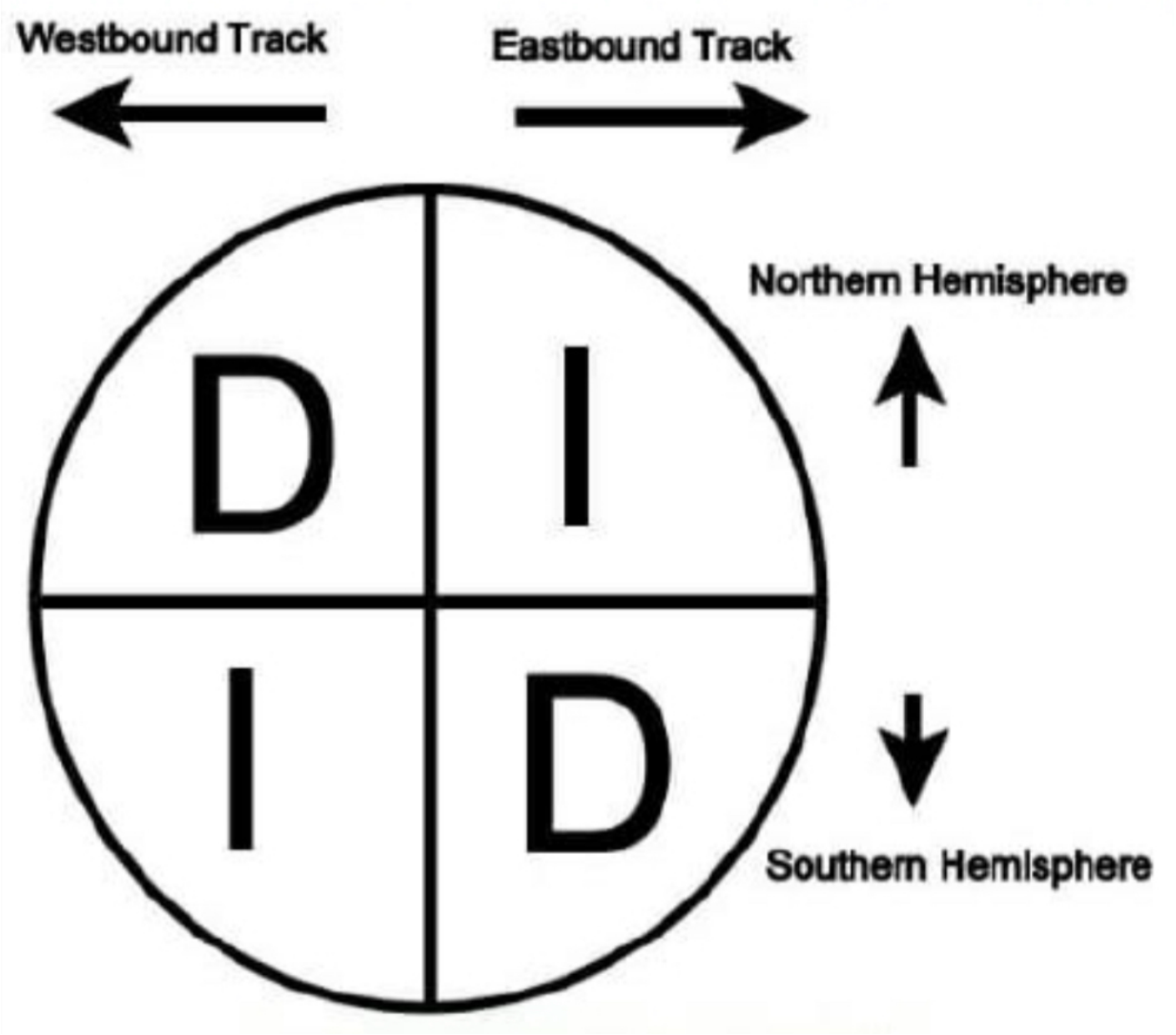

AMBIGUOUS QUESTIONS

Q. 114 of 122 Marks : 2.0

You have skipped this question, you scored 0.00

YOUR TIME 31s ON AVG. TIME 0s

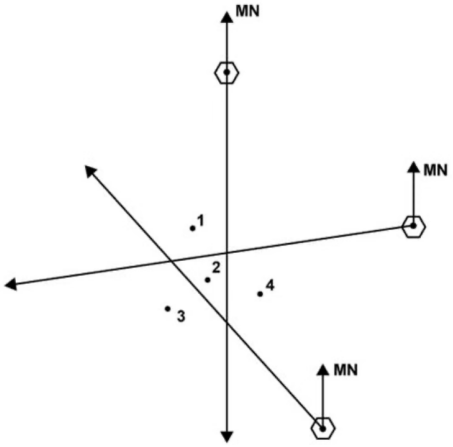

The fix of the aircraft position is determined by radials from three VOR stations. The measurements contain small random errors, known systematic errors and unknown systematic errors. The measured radials are corrected for known systematic errors and are plotted on a navigation chart. The result is shown at the reference. What is the most probable position of the aircraft?

A 4

B 1

C 3

D 2

Copyright © Aeroversity ® 2025.All Rights Reserved. Copyright Policy

Q. 120 of 122

An aircraft is located at a particular location where in July sunrise is 03:17 LMT and sunset 21:37 LMT. What is the most likely latitude of this location?

A 60°N

B 82°N

C The equator (0°N/S)

D 20°S

Copyright © Aeroversity ® 2025.All Rights Reserved. Copyright Policy

1. Navigation Aid

2. NDB

3. VOR

4. DME

5. Co-located VOR/DME

6. TACAN

7. VORTAC

8. Unlighted Obstacle

9. Lighted Obstacle

10. Multiple Unlighted Obstacle

11. Multiple Lighted Obstacle

12. Exceptionally High Unlighted Obstacle

13. Exceptionally High Lighted Obstacle

14. Marine Light (F = Fixed)

15. Aeronautical Ground Light

16. Lightship

1

2

3

4

5

6

7

8

9

10

11

12

13

14

15
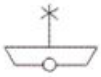
16