BRICK ATIVE

MINI COOPER – BEAN

188 PCS

DESIGN:
LUKASZ LIBUSZEWSKI

1

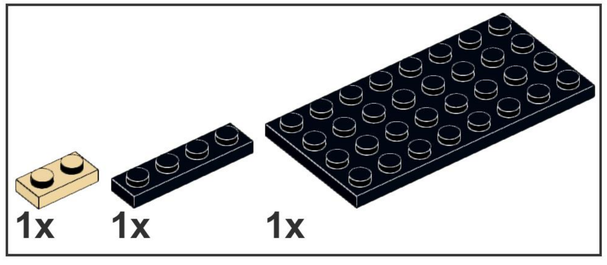

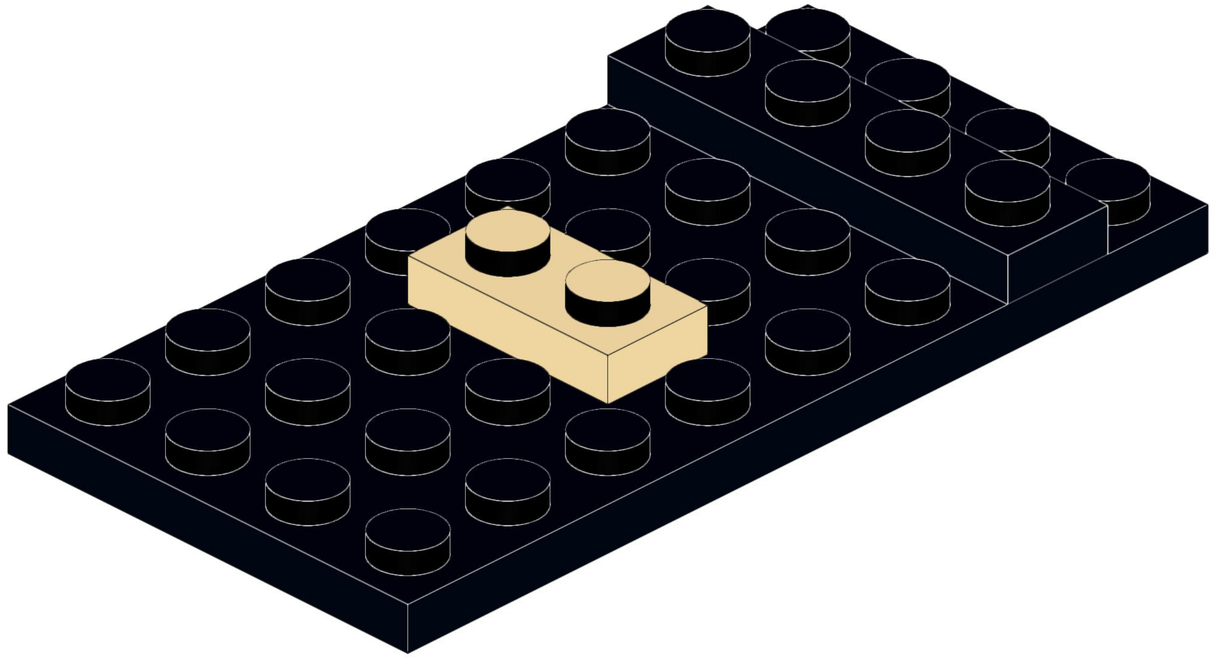

2

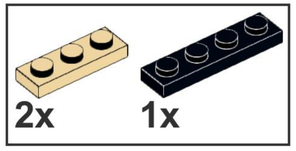

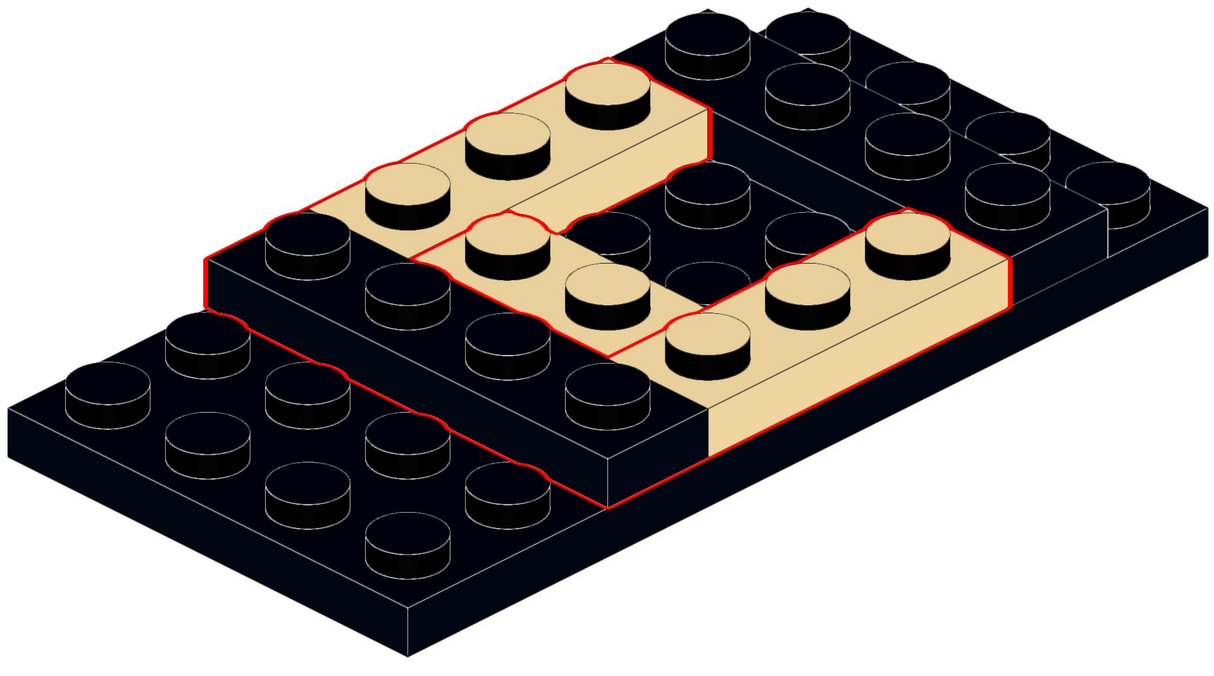

3

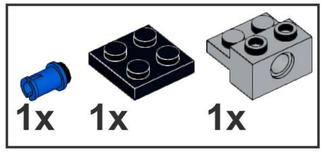

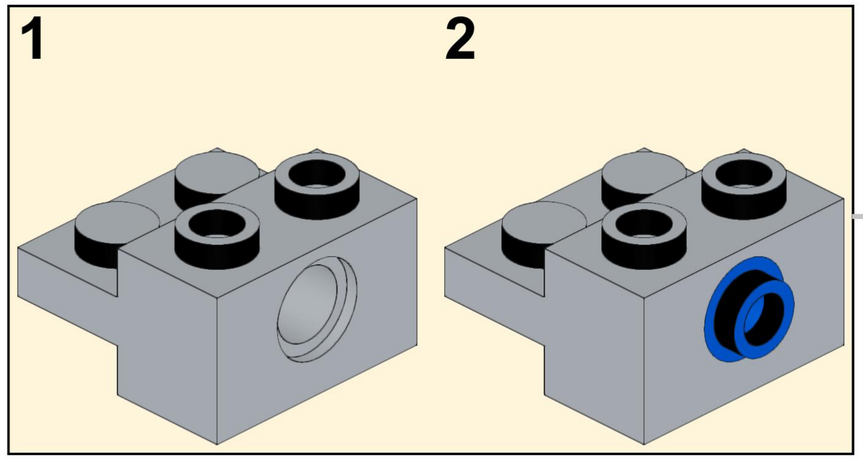

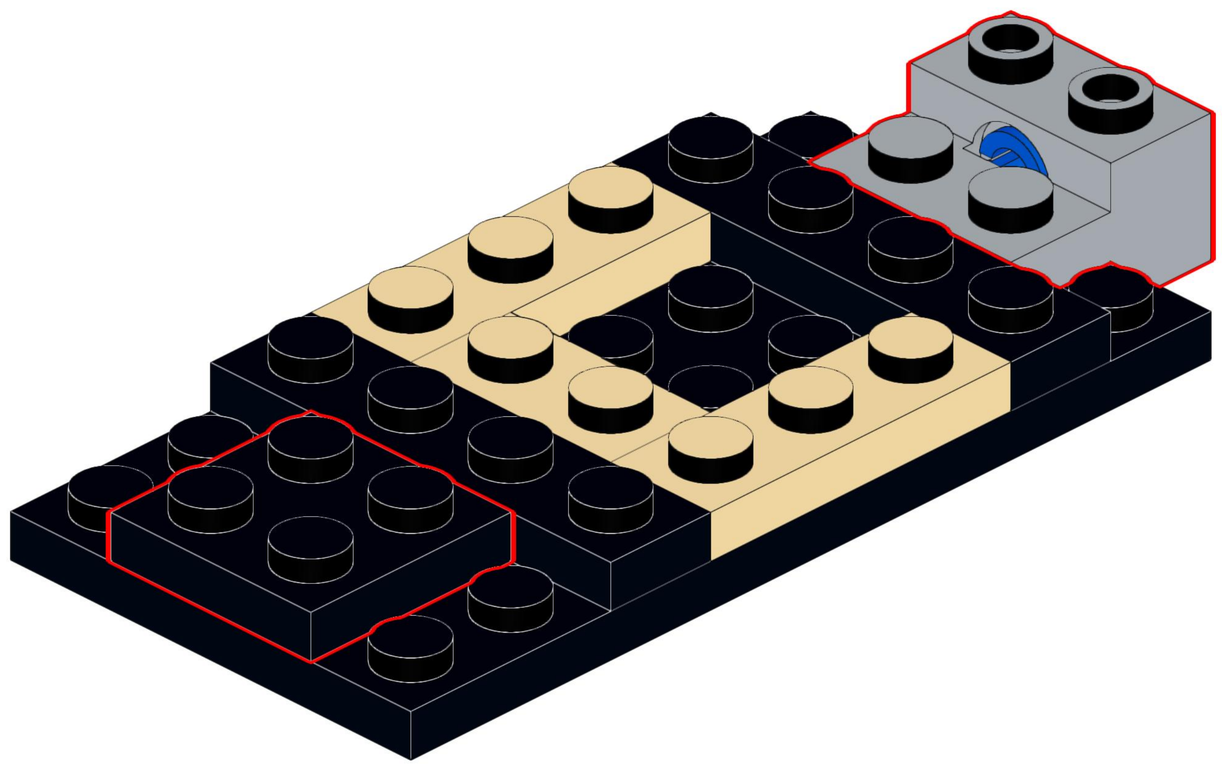

4

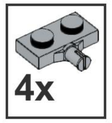

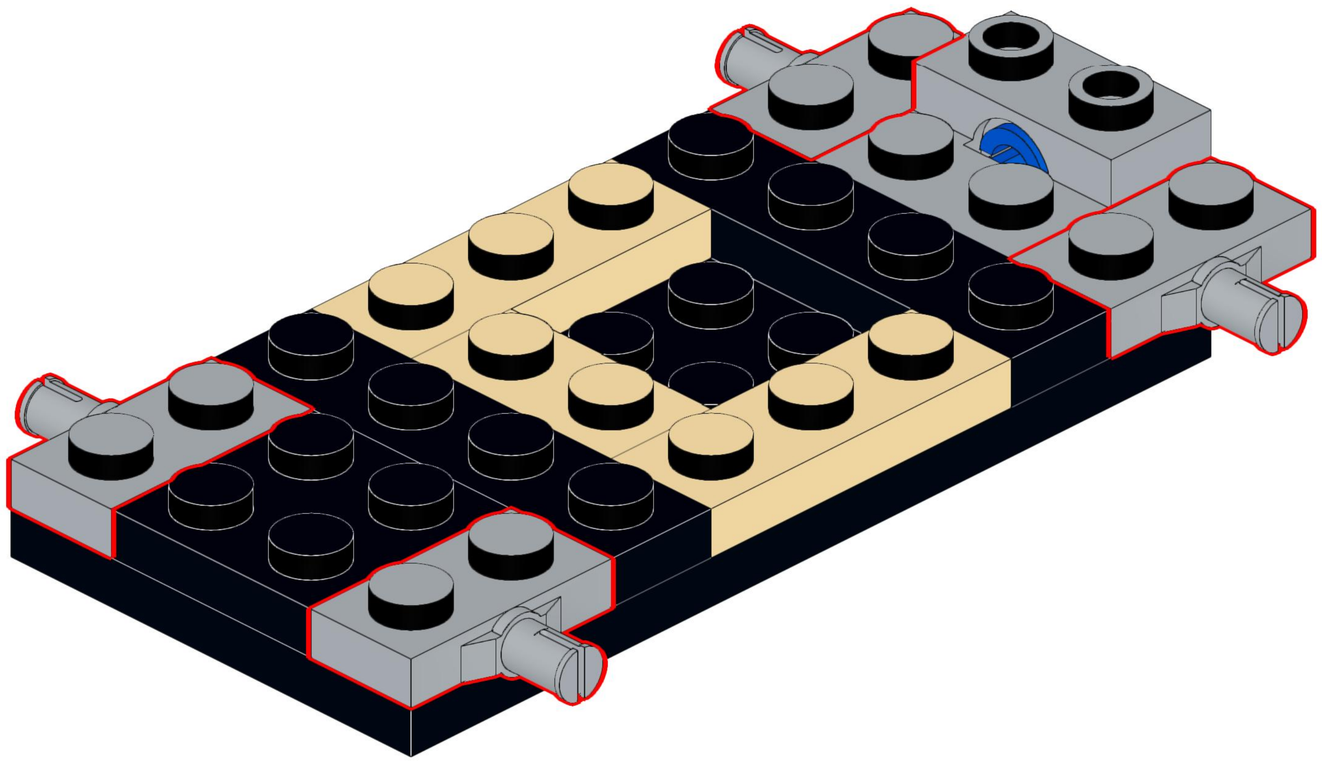

5 2x

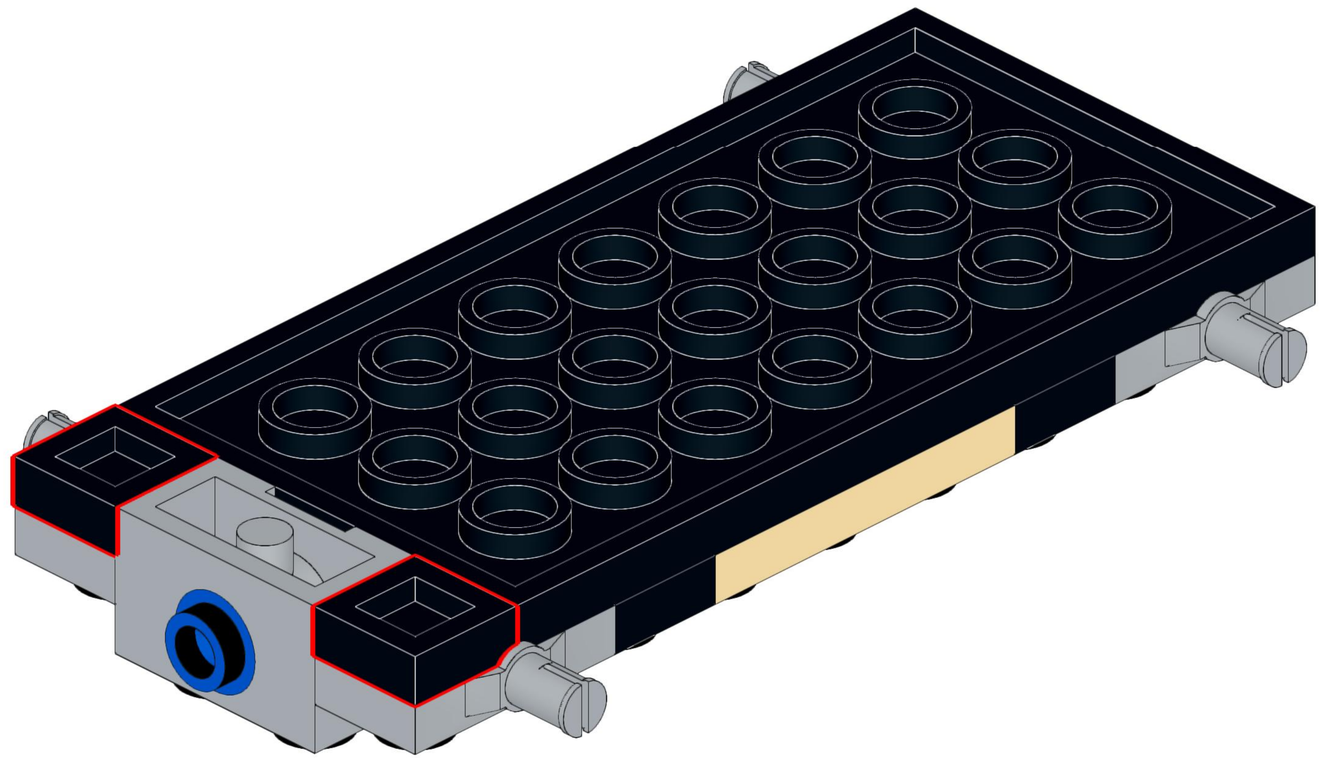

6

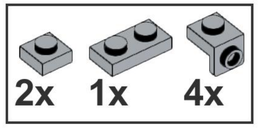

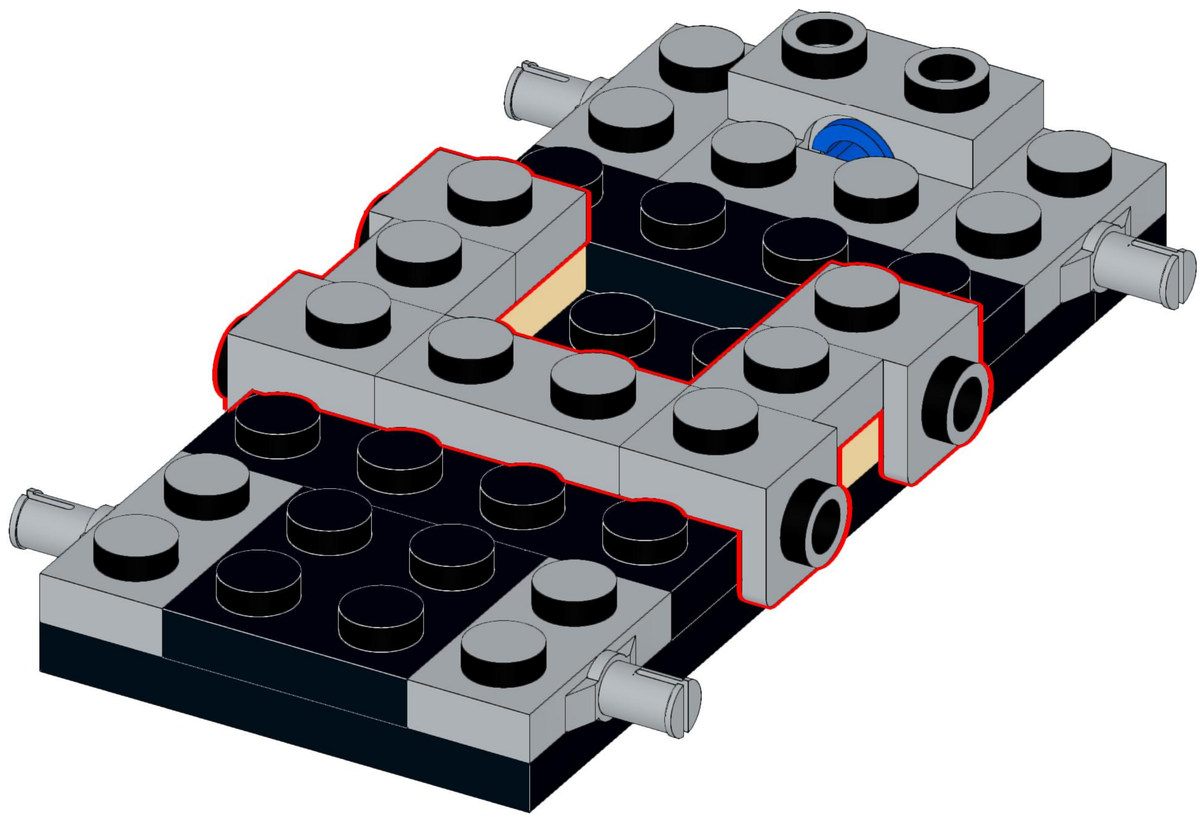

7

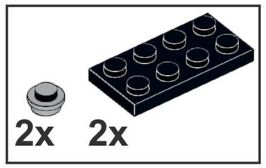

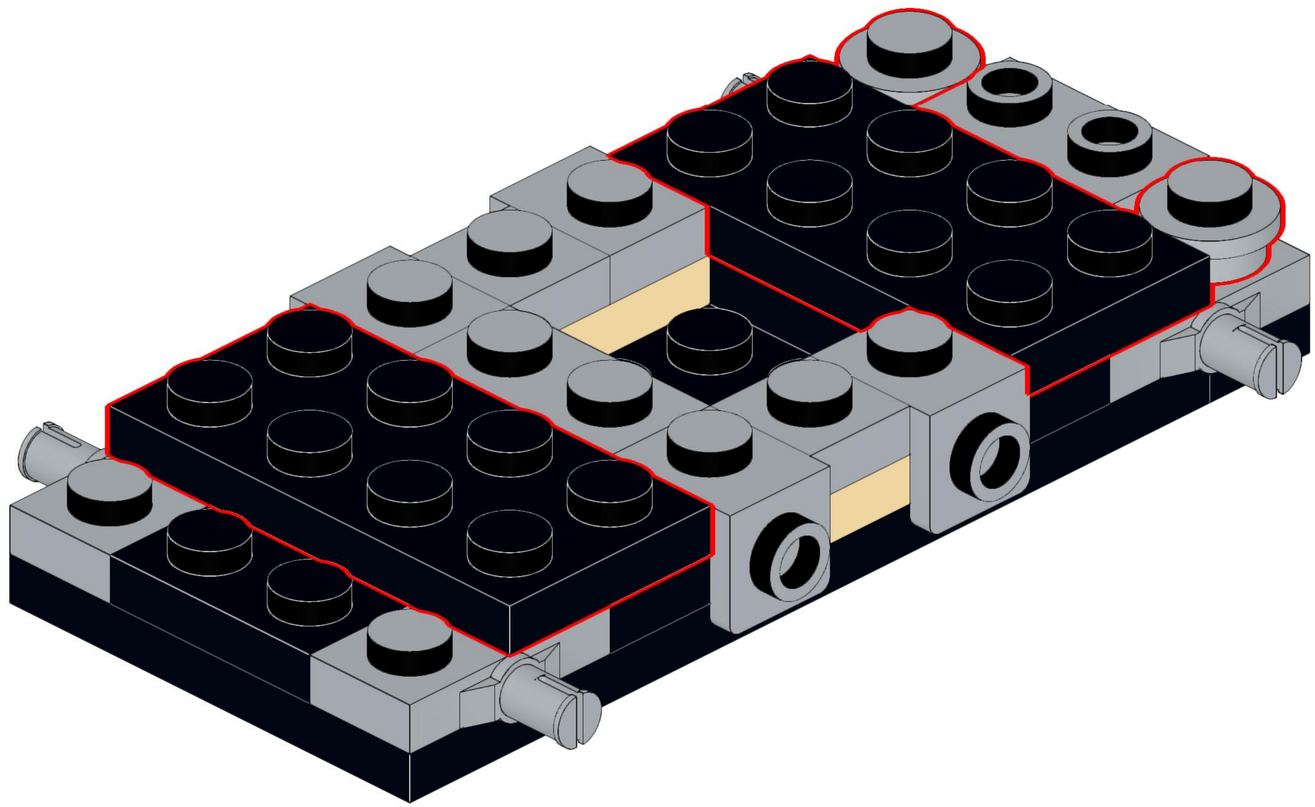

8

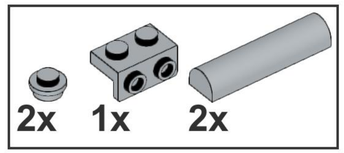

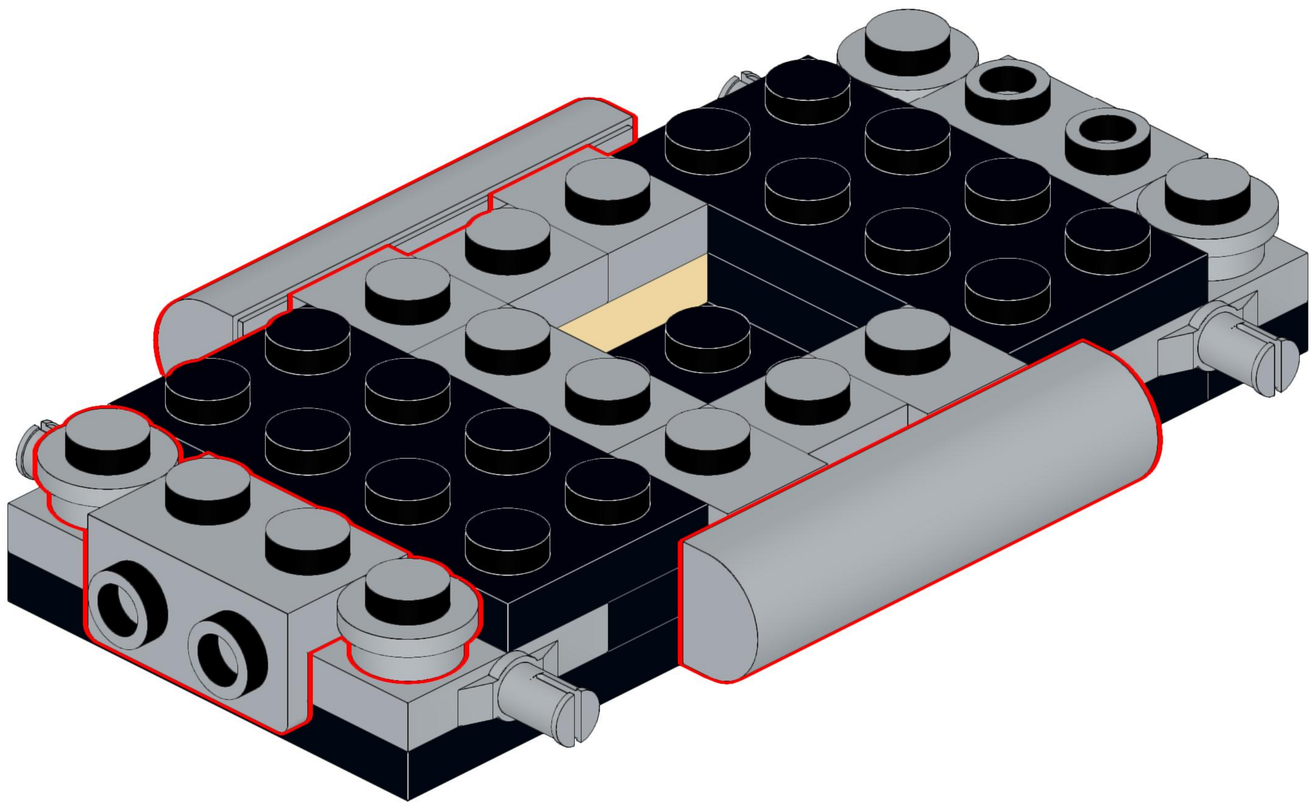

9

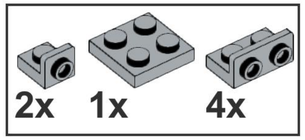

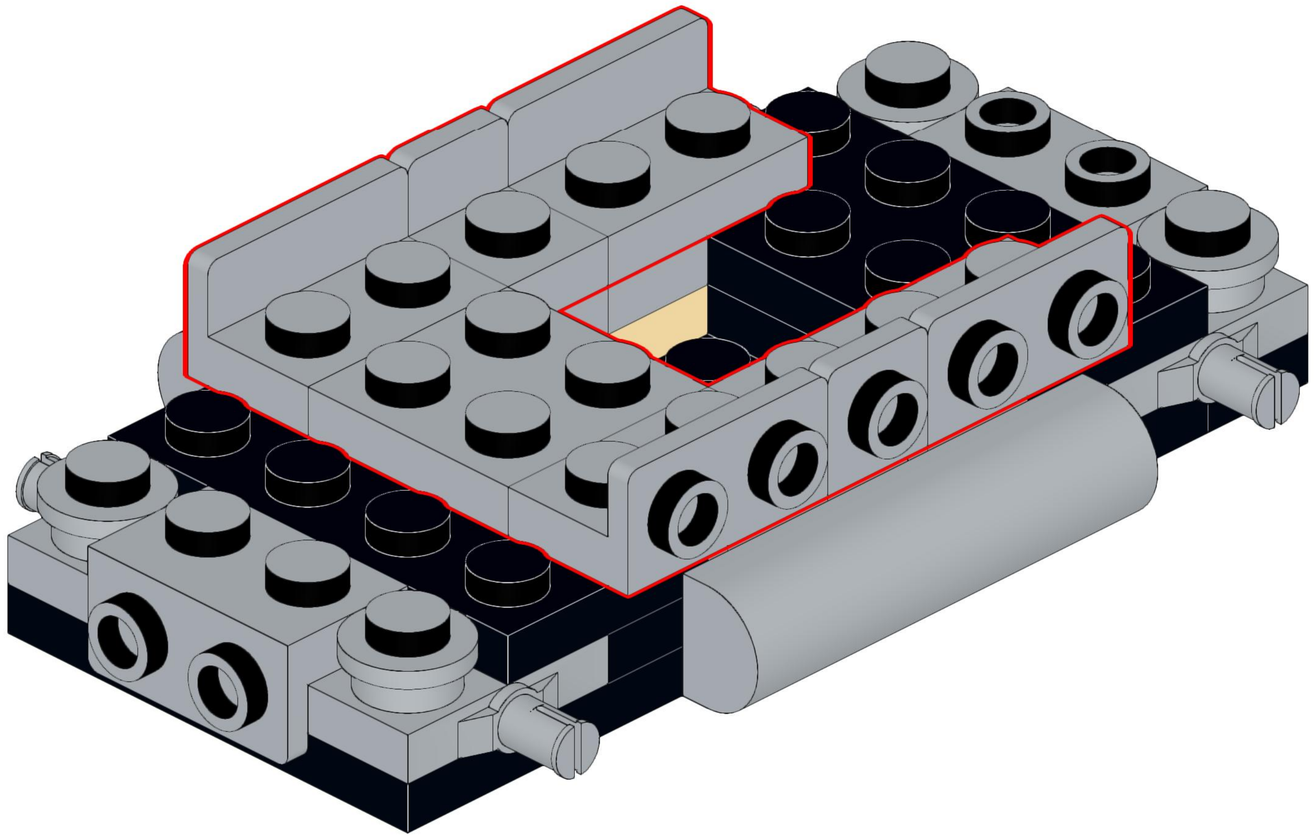

10

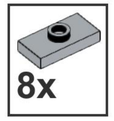

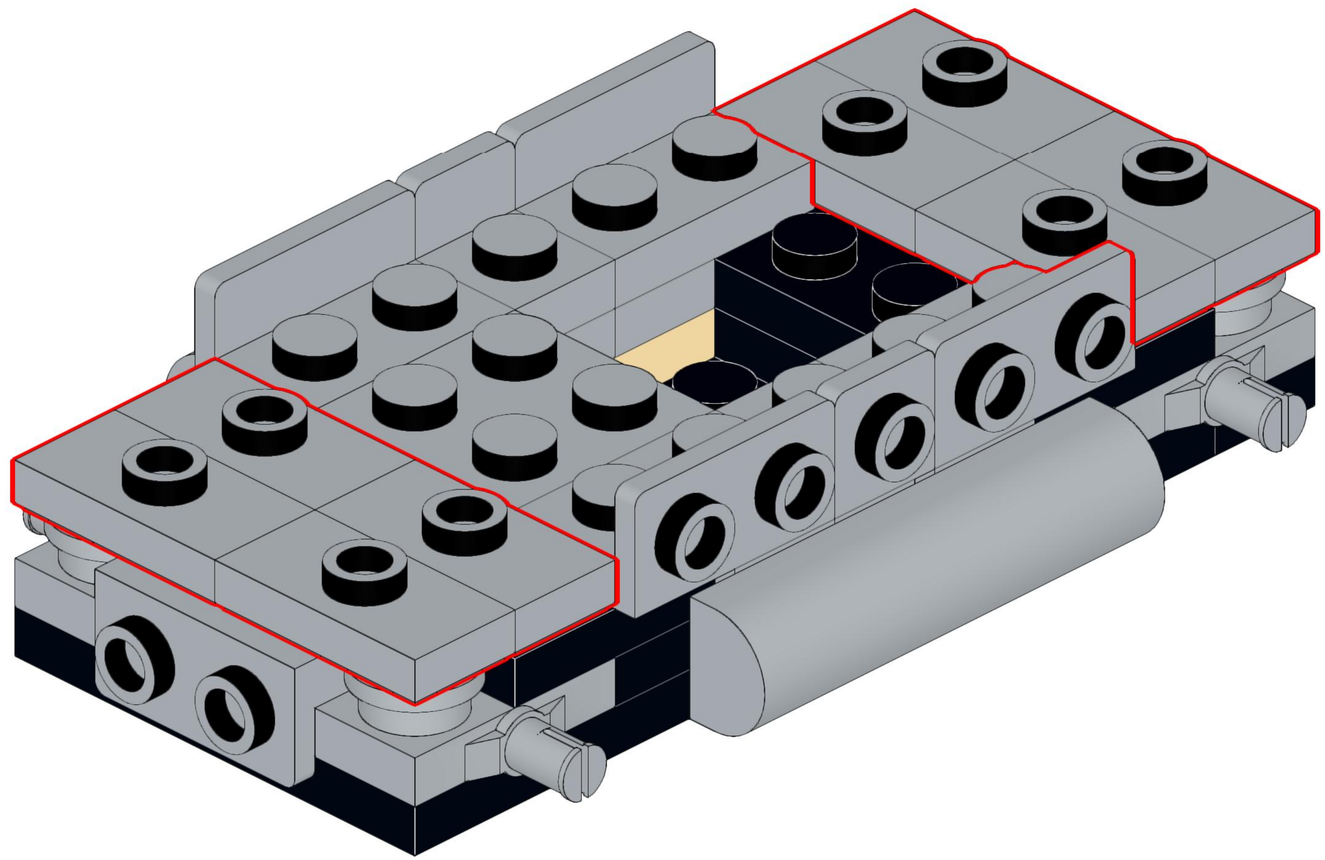

11

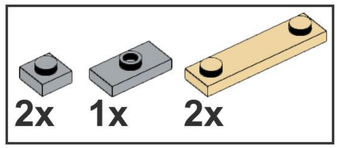

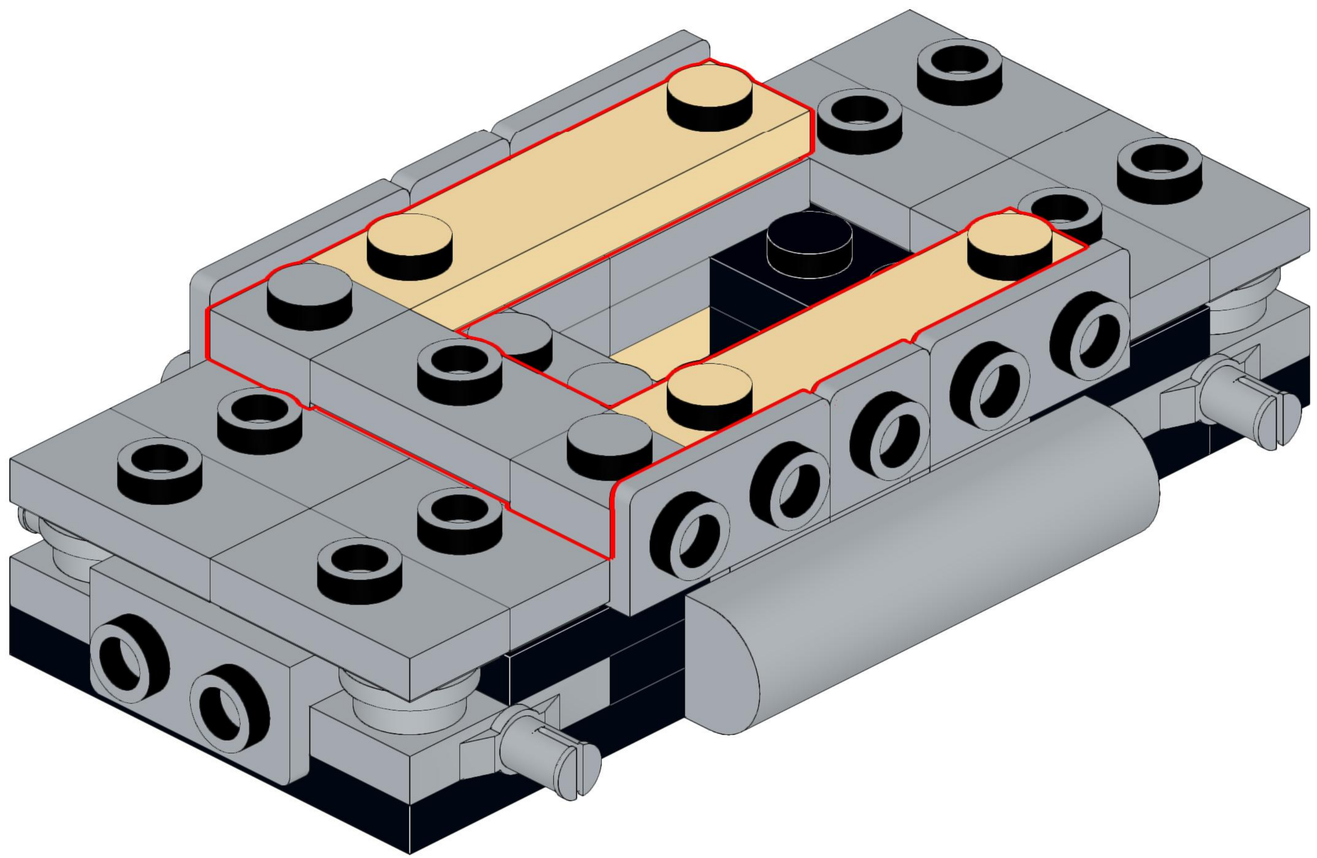

12

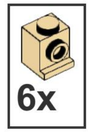

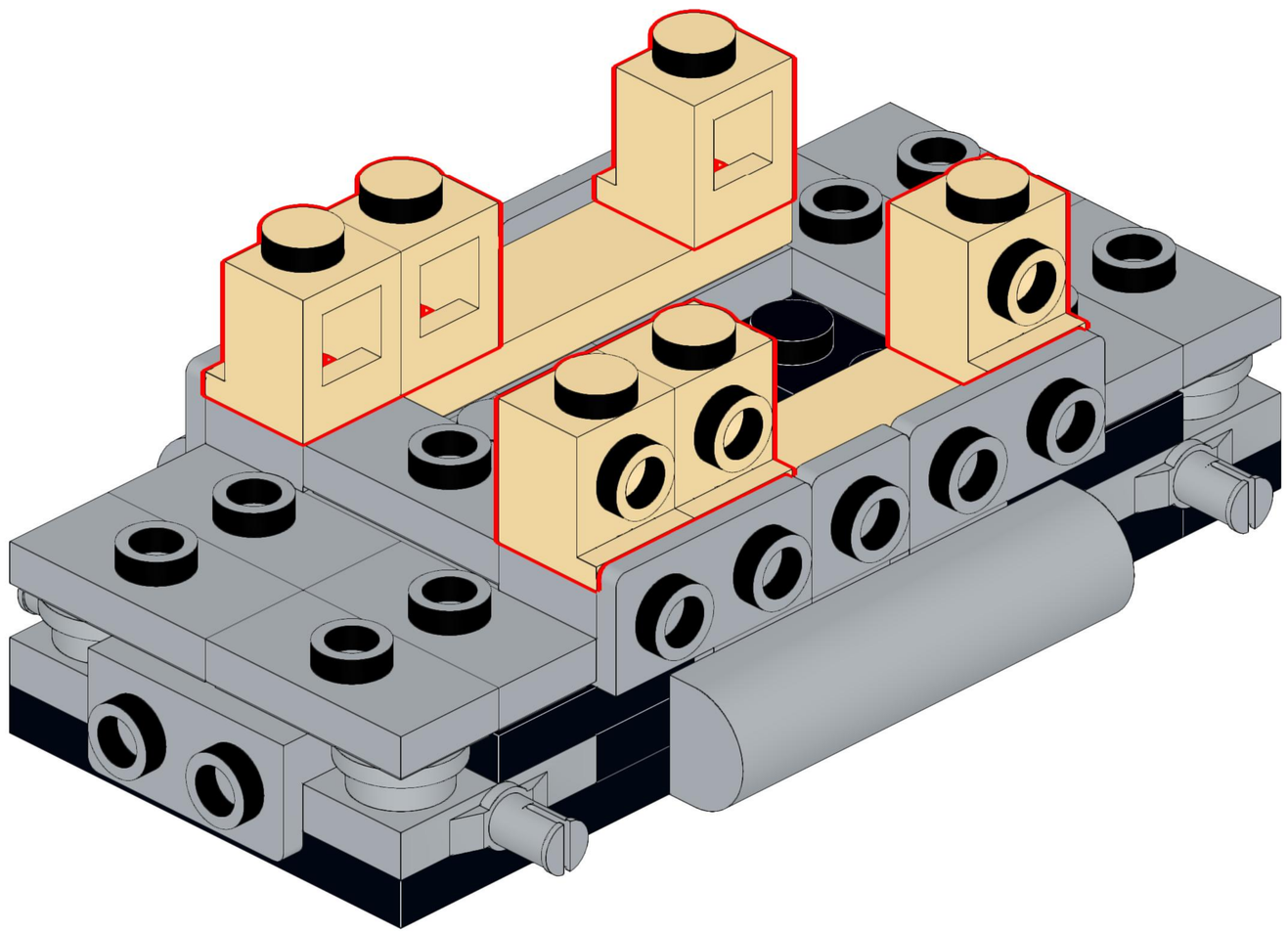

13

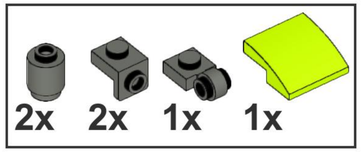

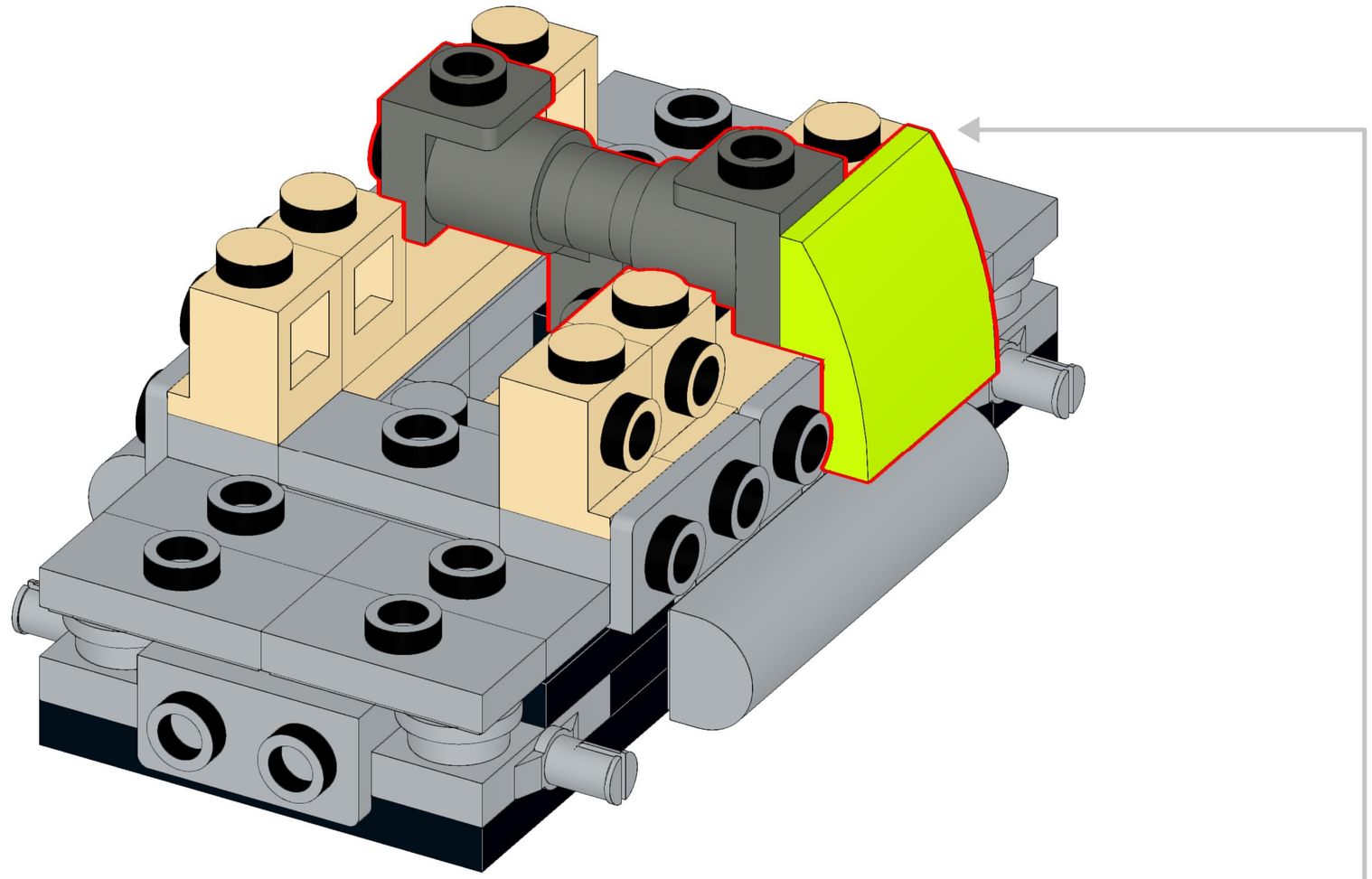

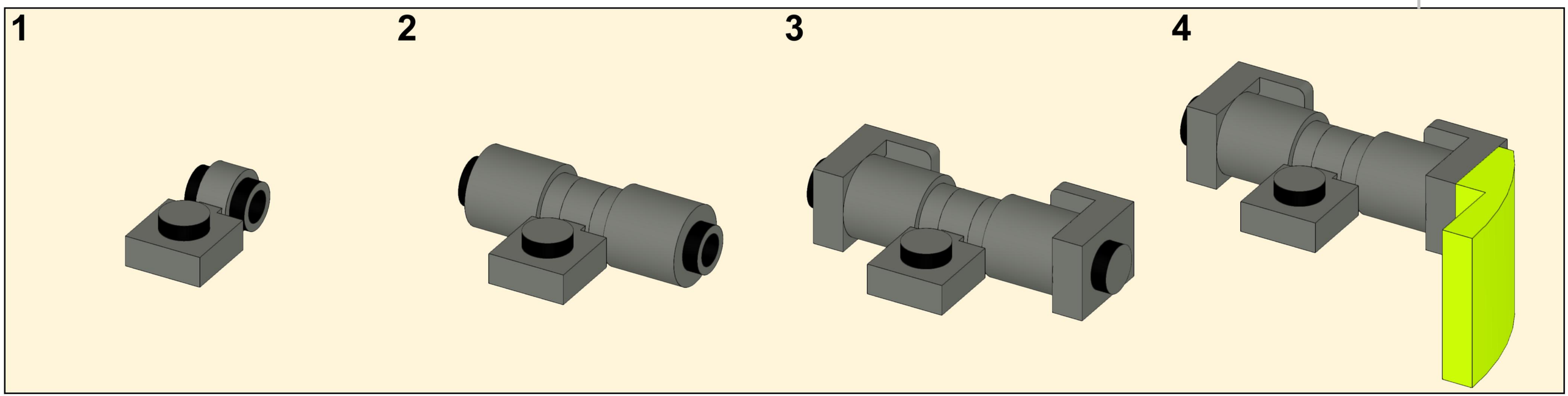

14

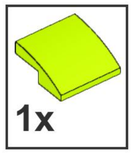

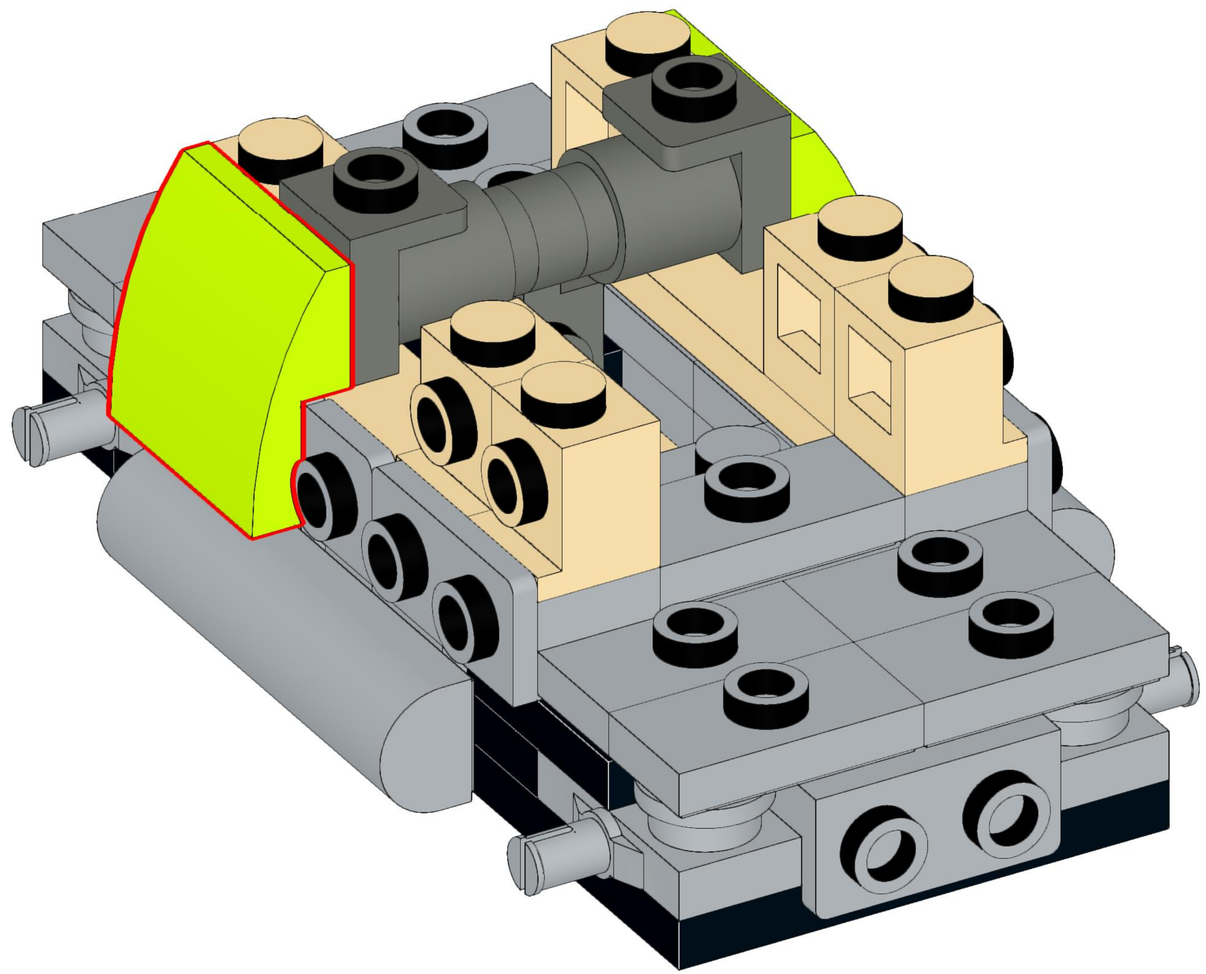

15

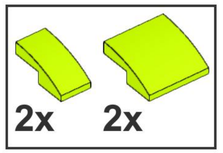

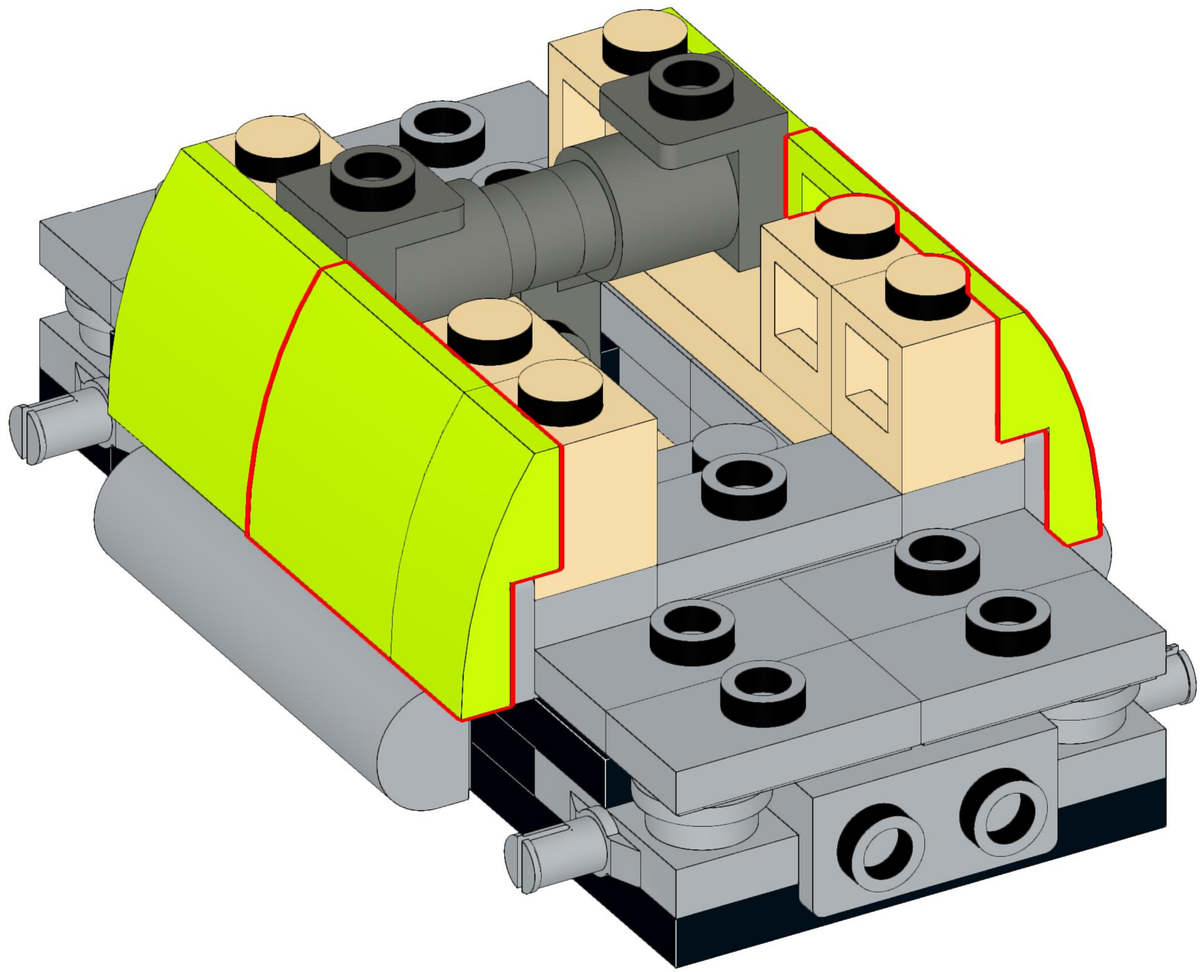

16

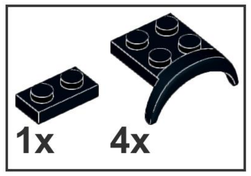

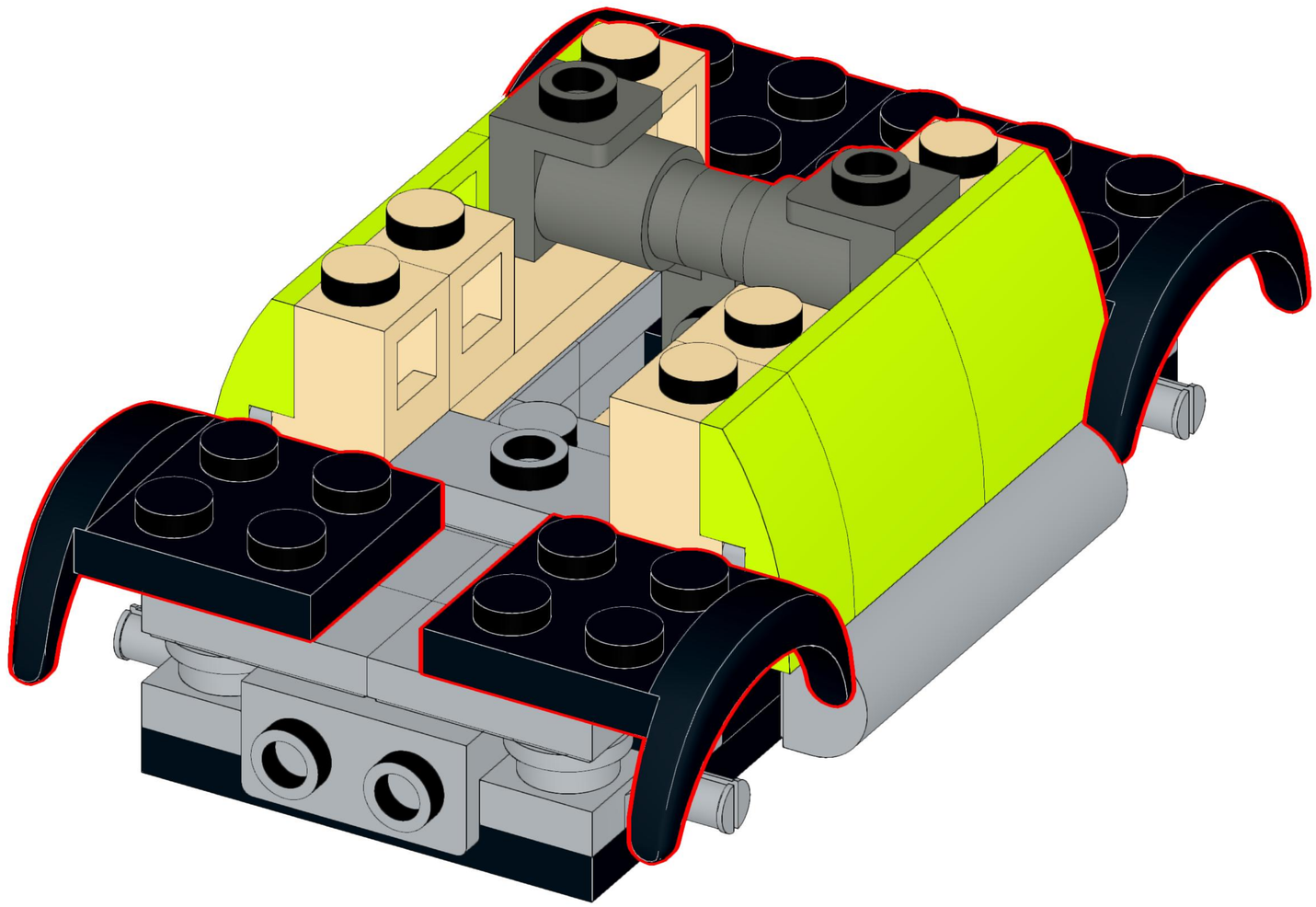

17

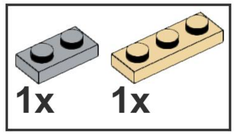

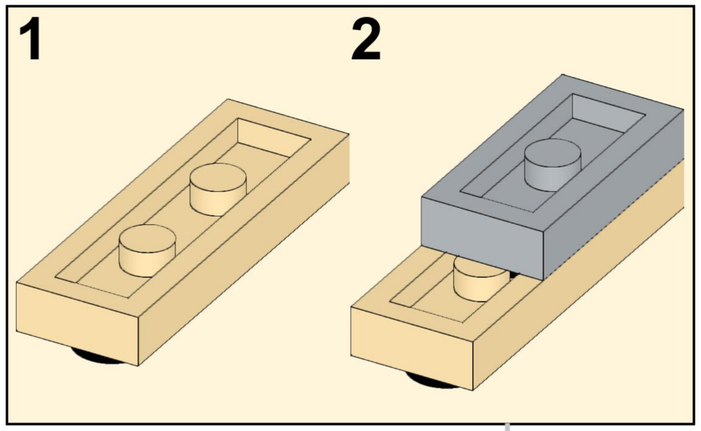

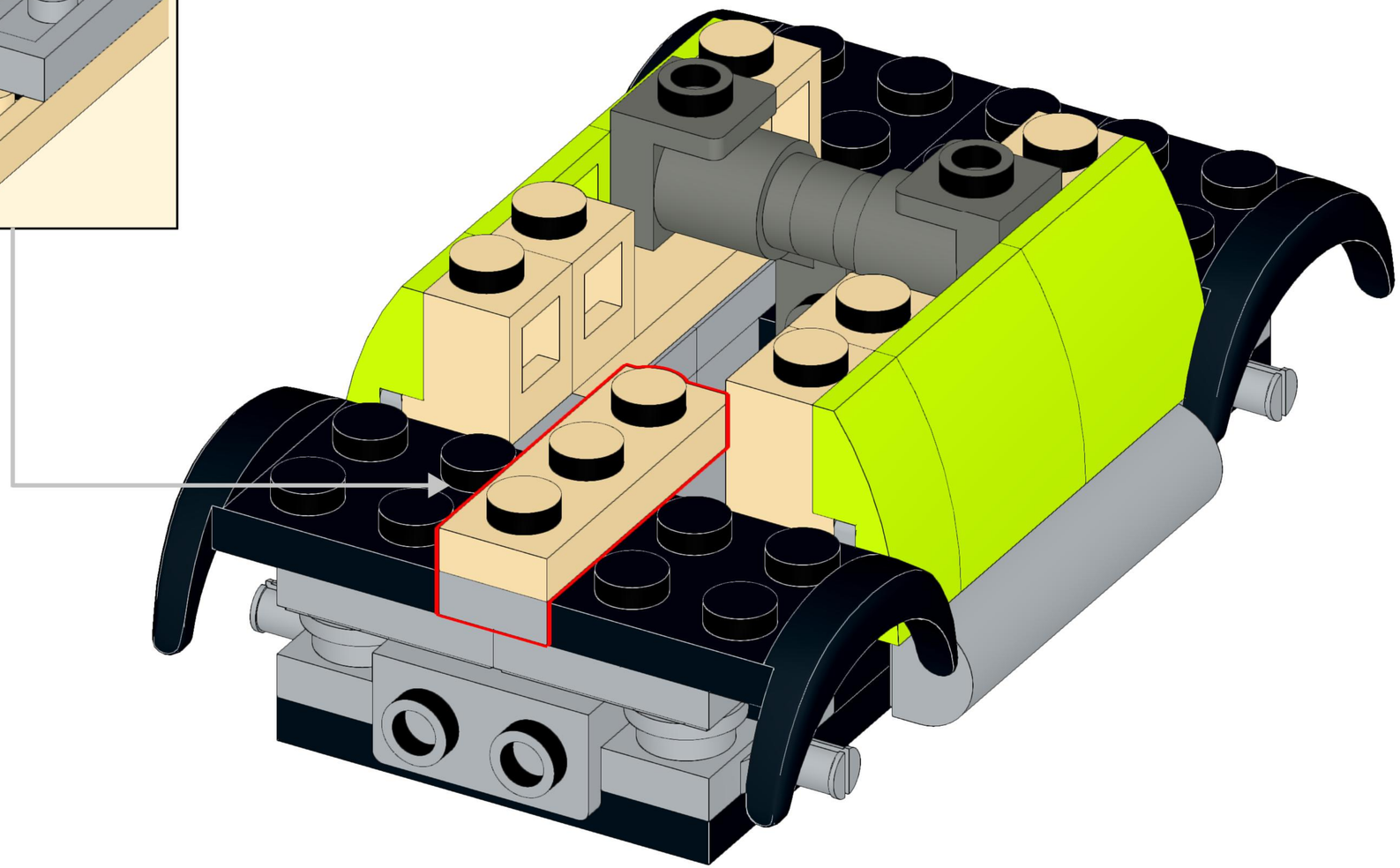

18

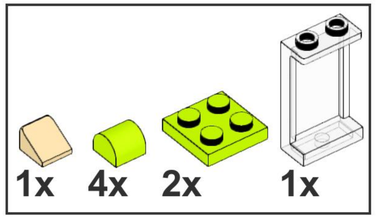

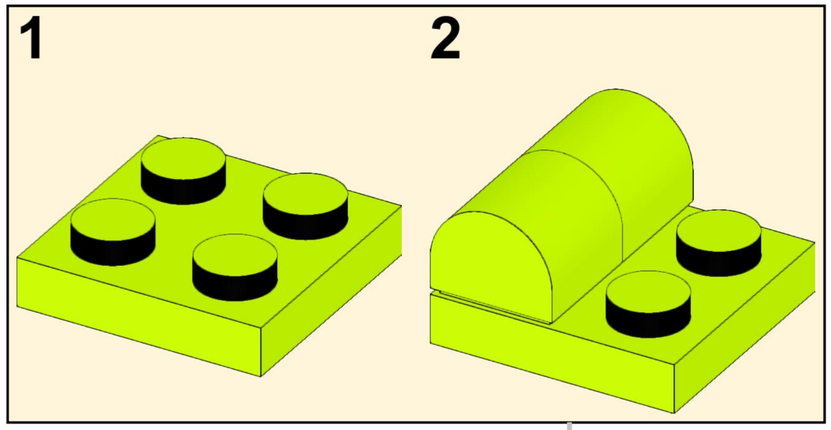

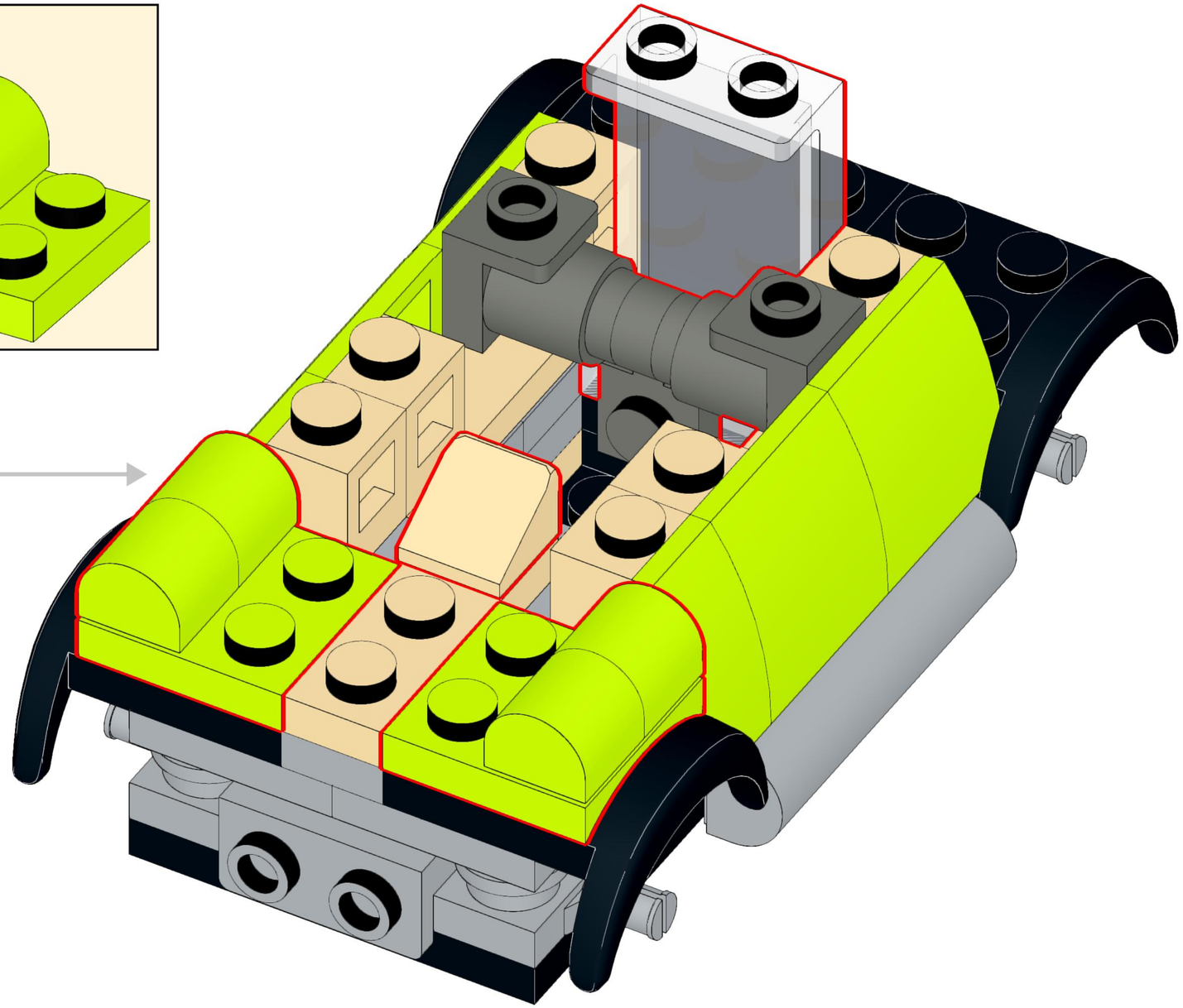

19

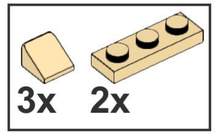

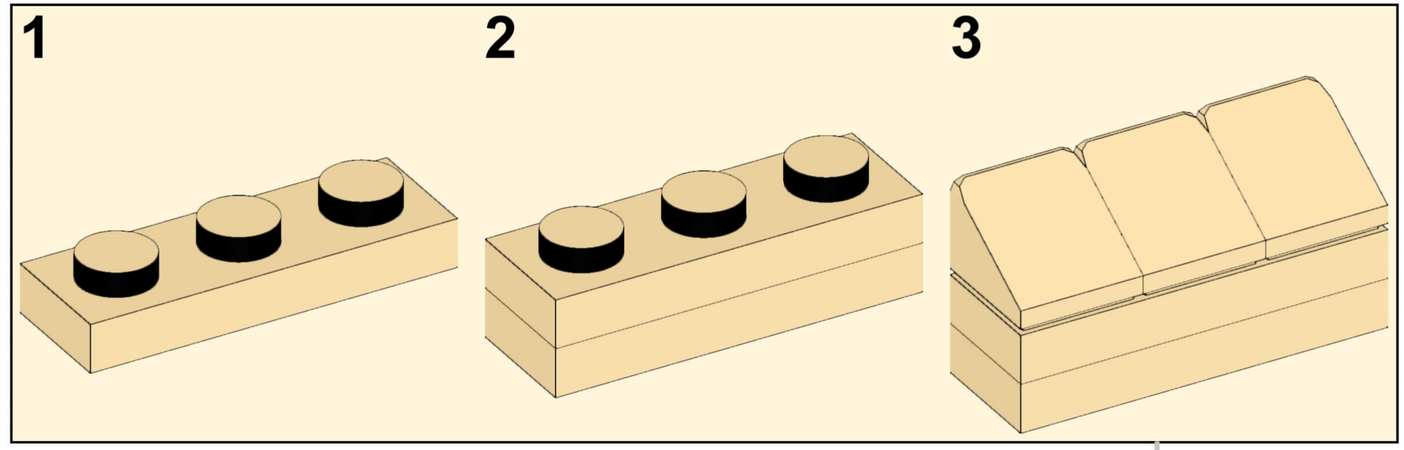

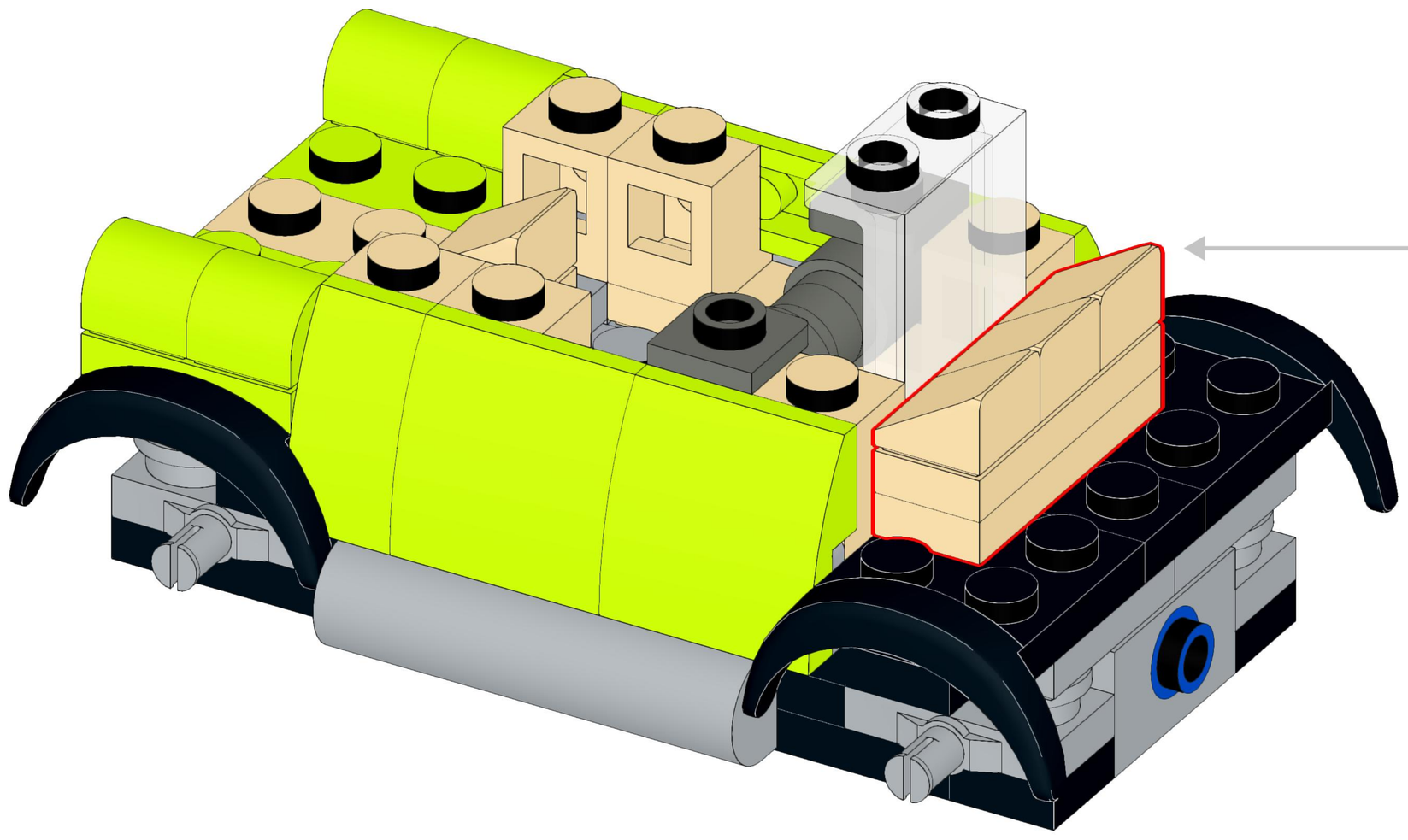

20

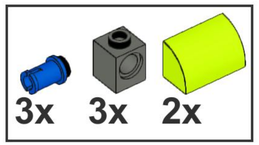

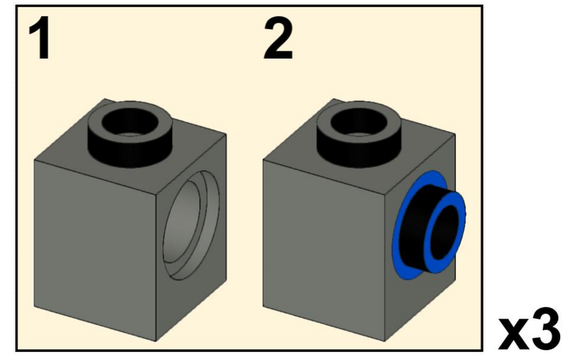

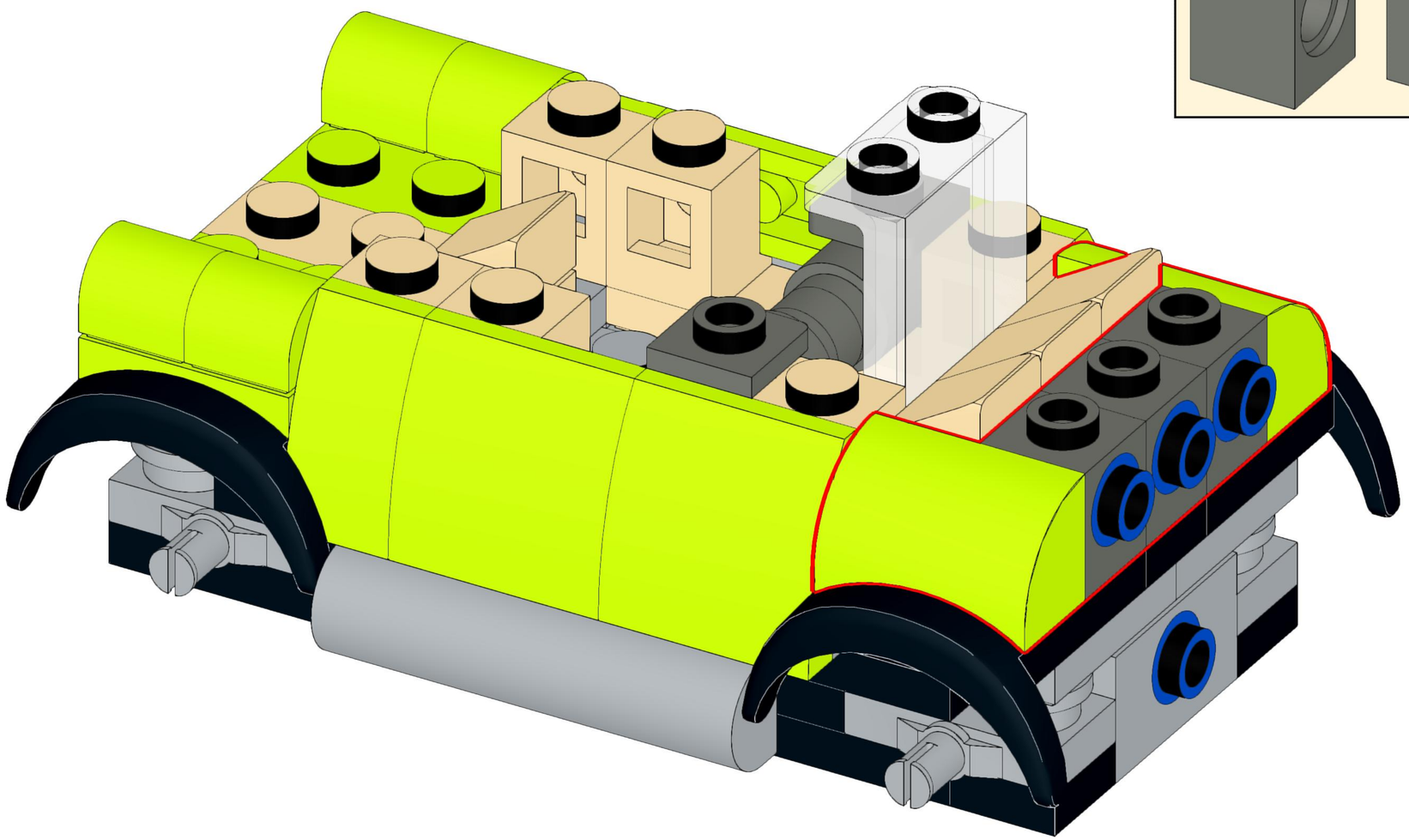

21

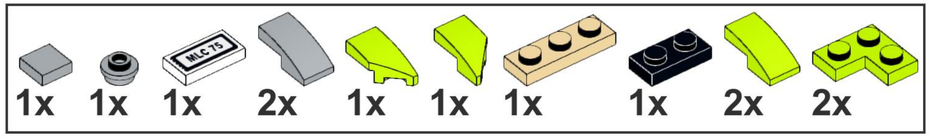

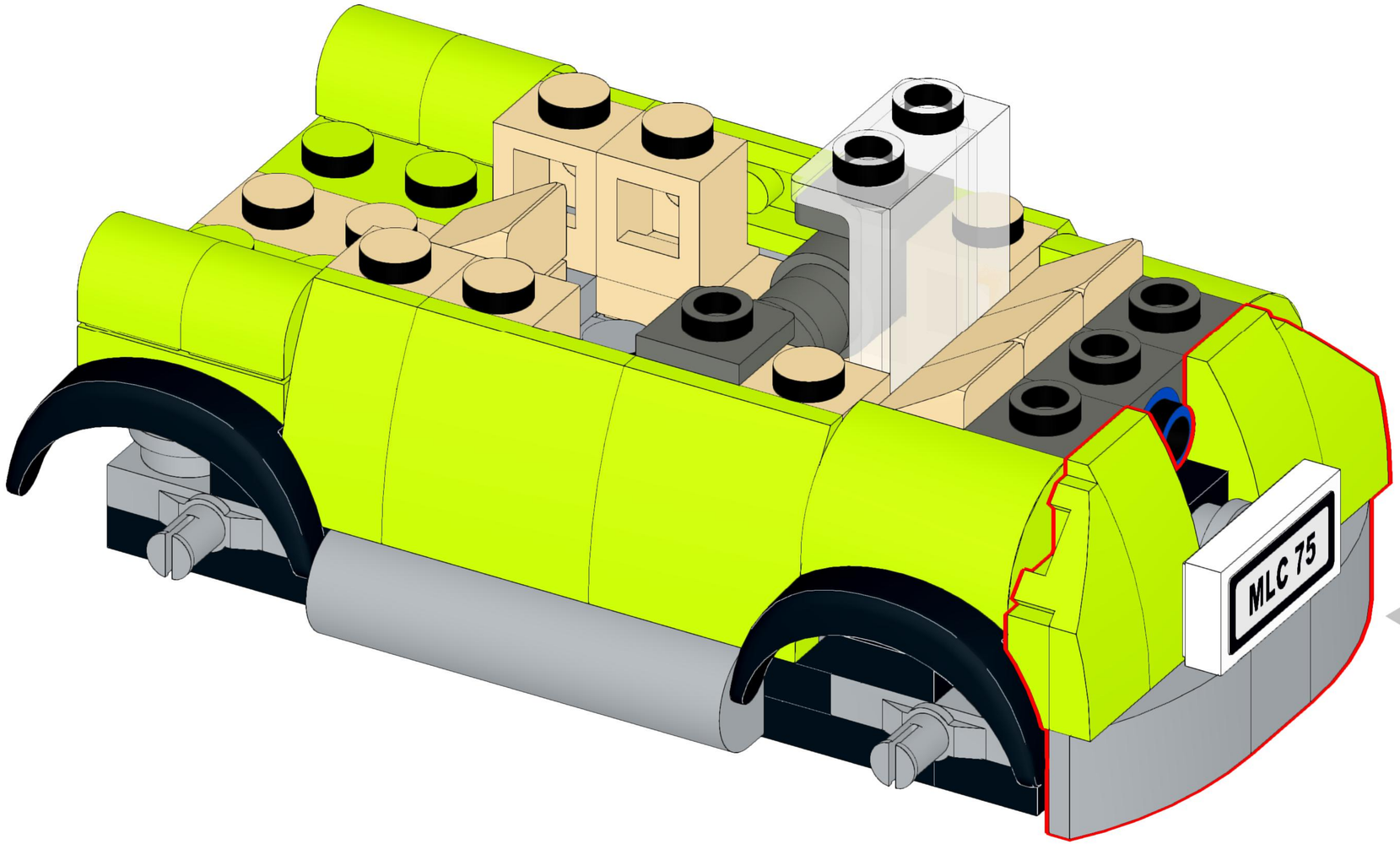

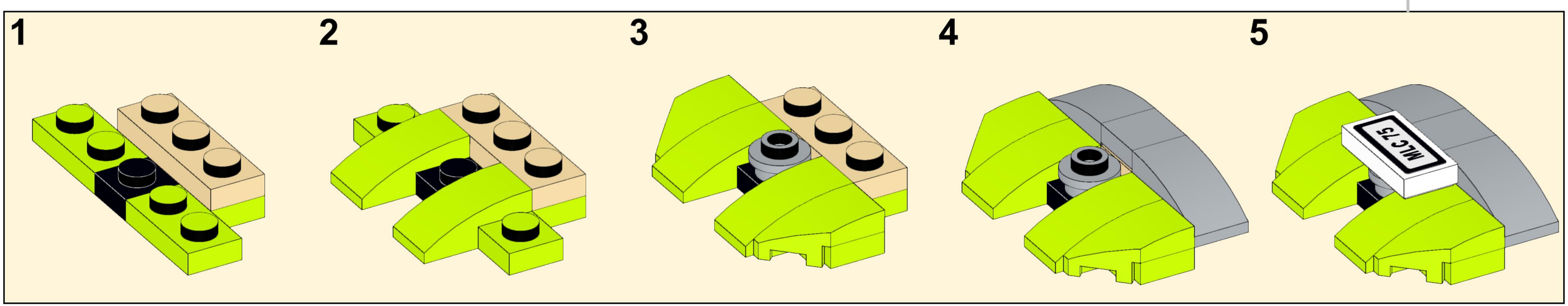

22

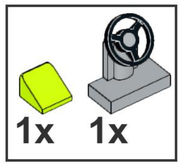

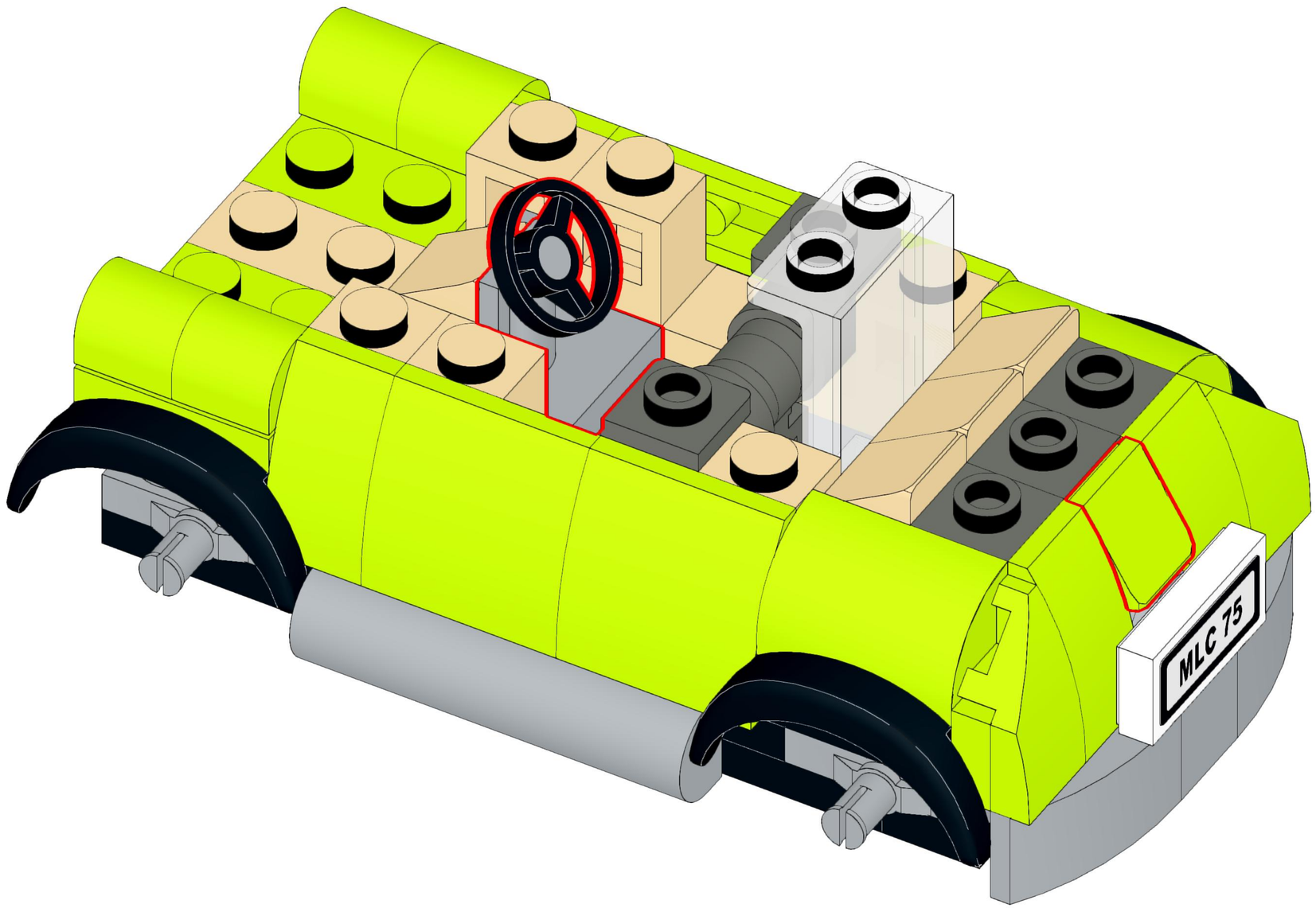

23

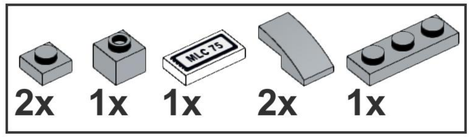

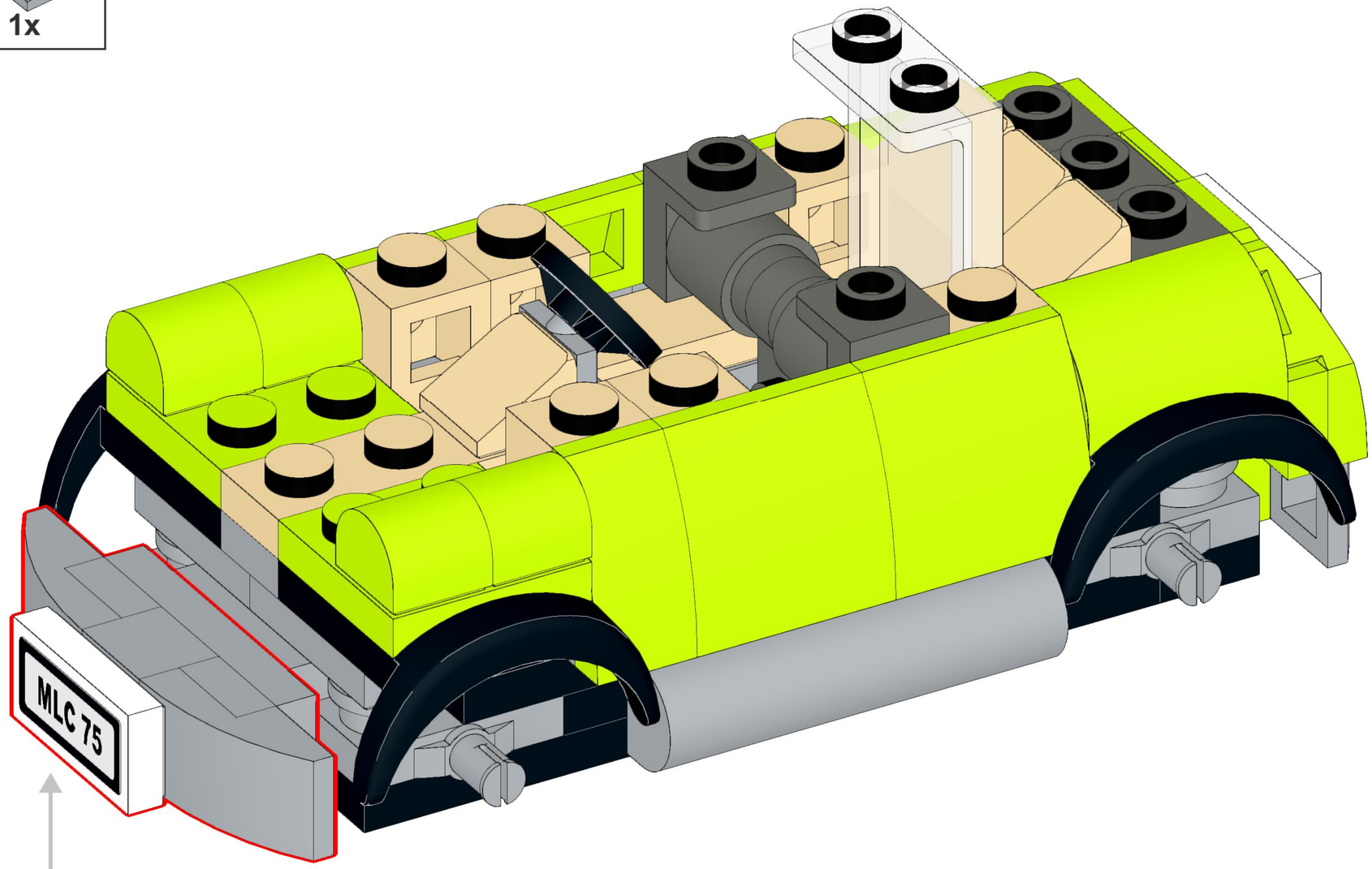

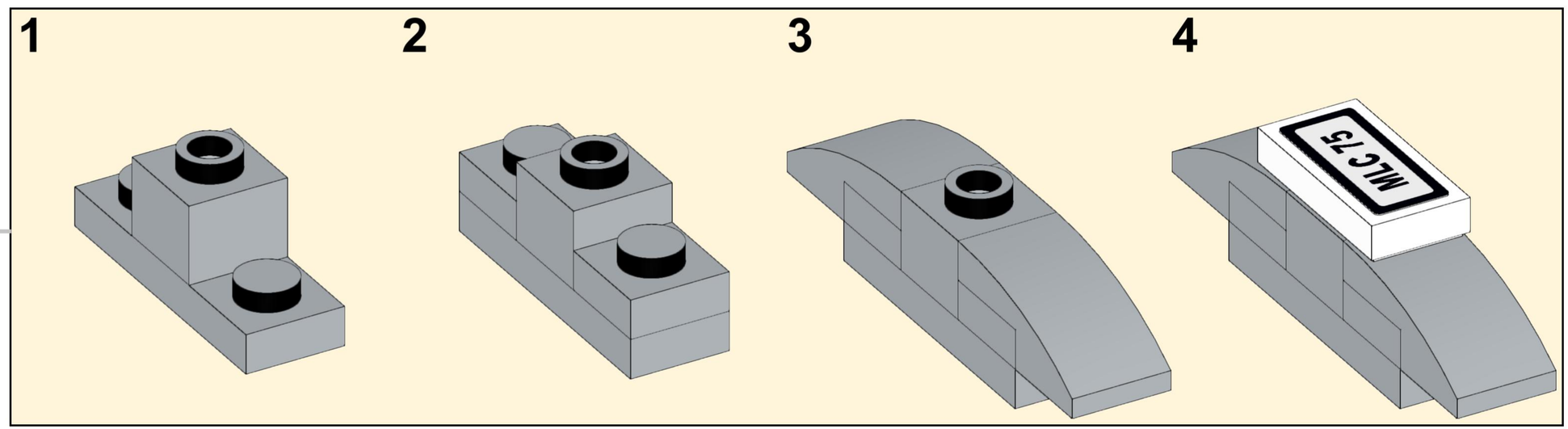

24

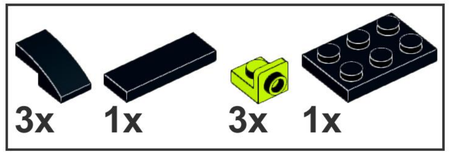

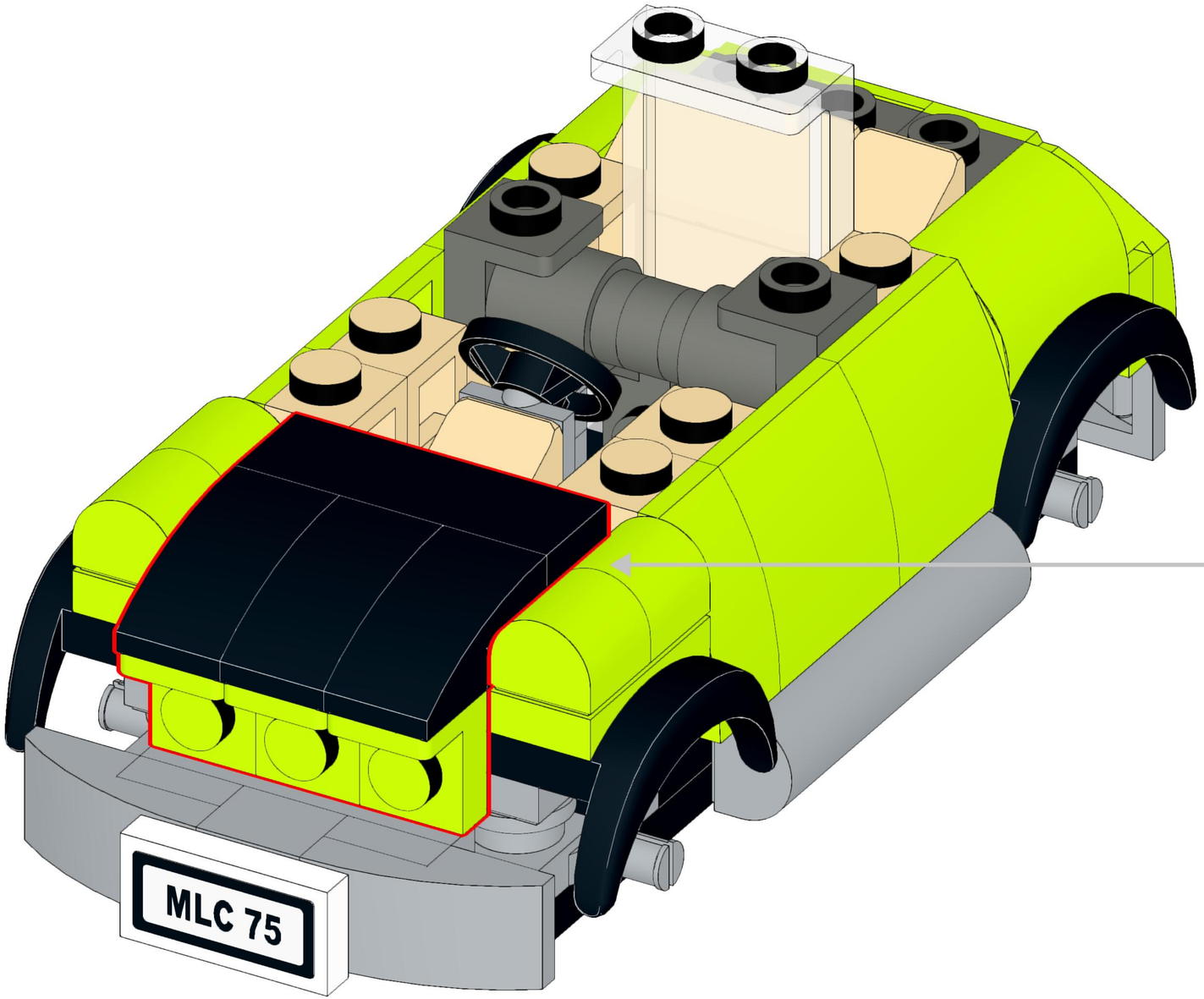

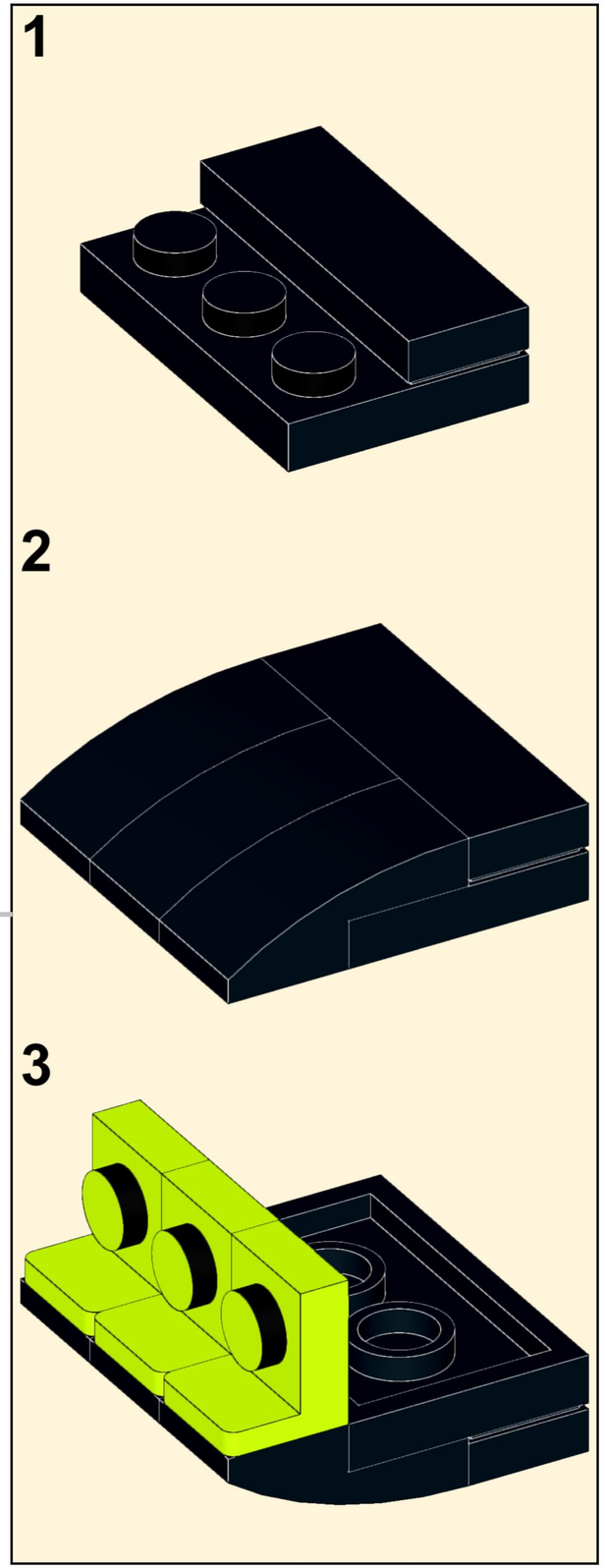

25

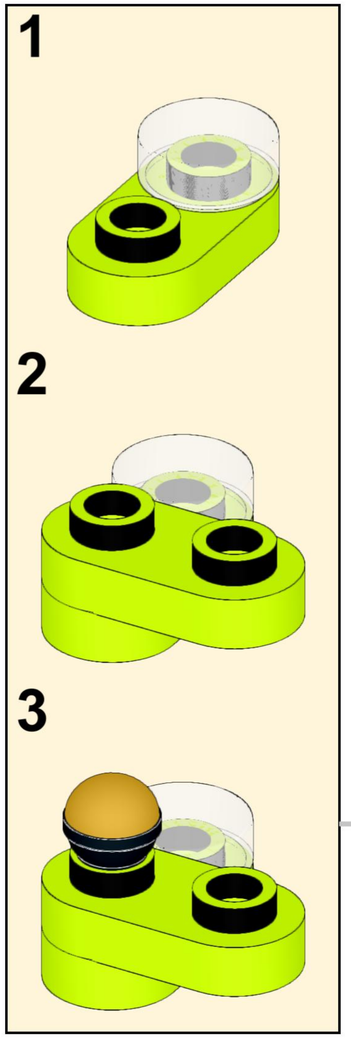

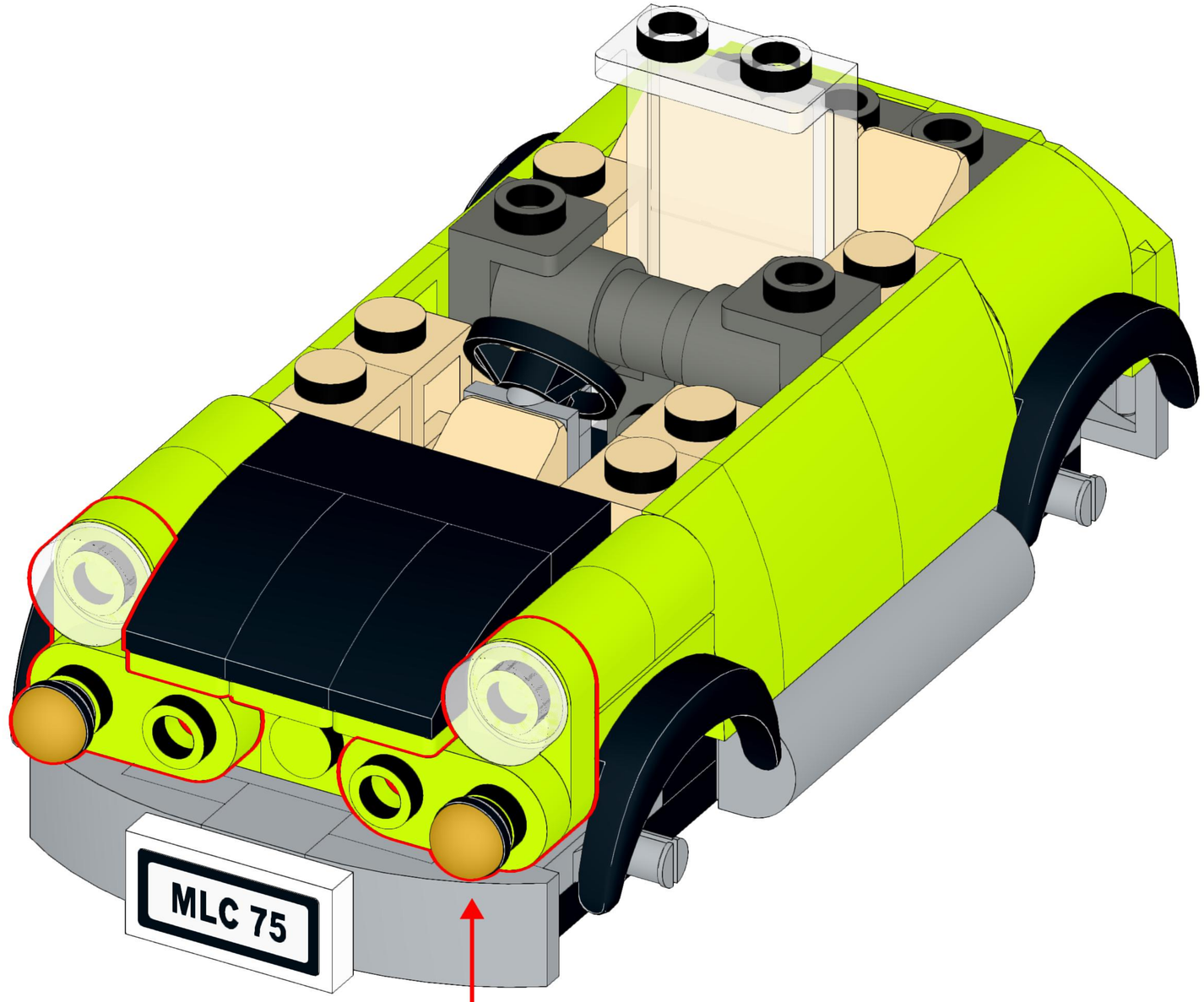

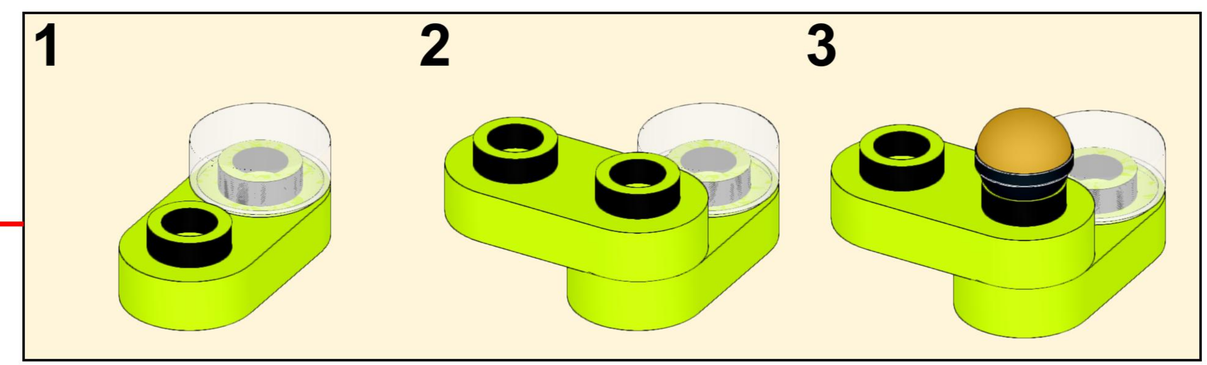

26

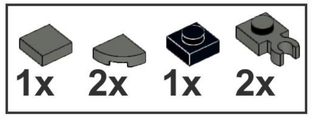

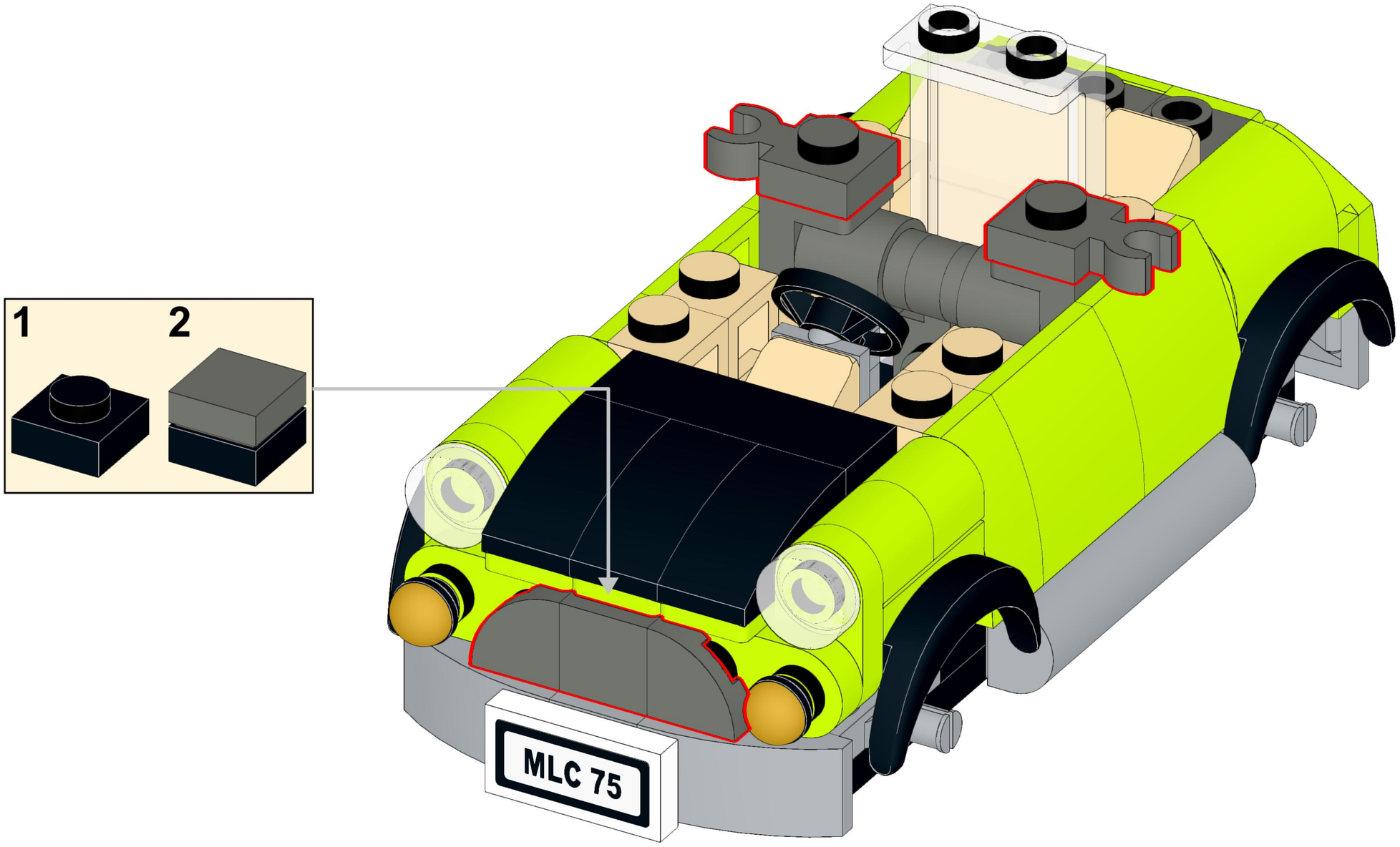

27

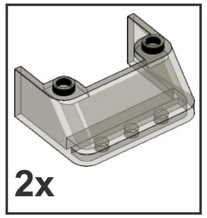

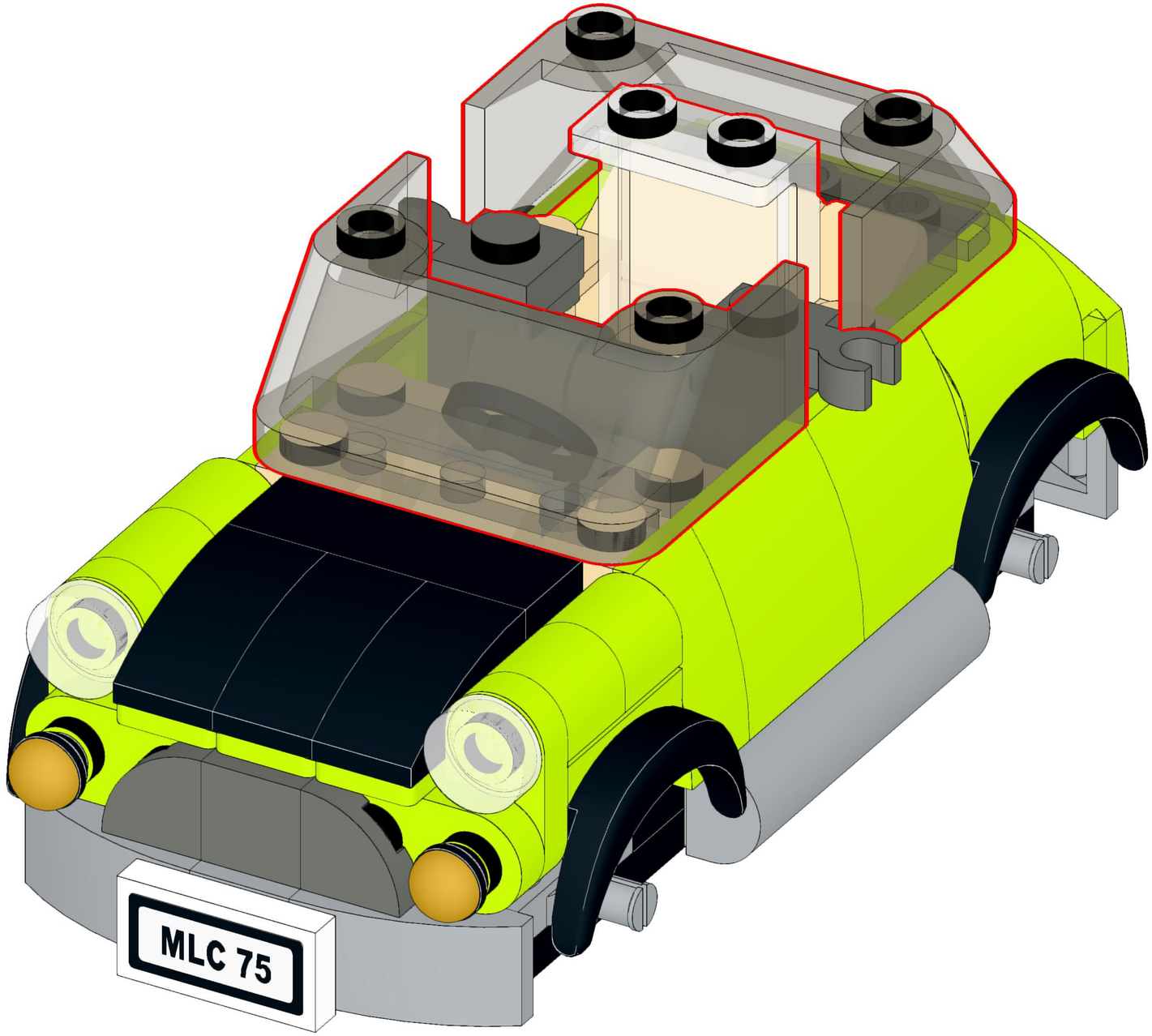

28

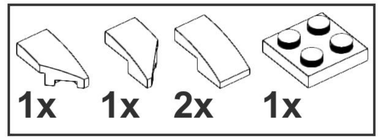

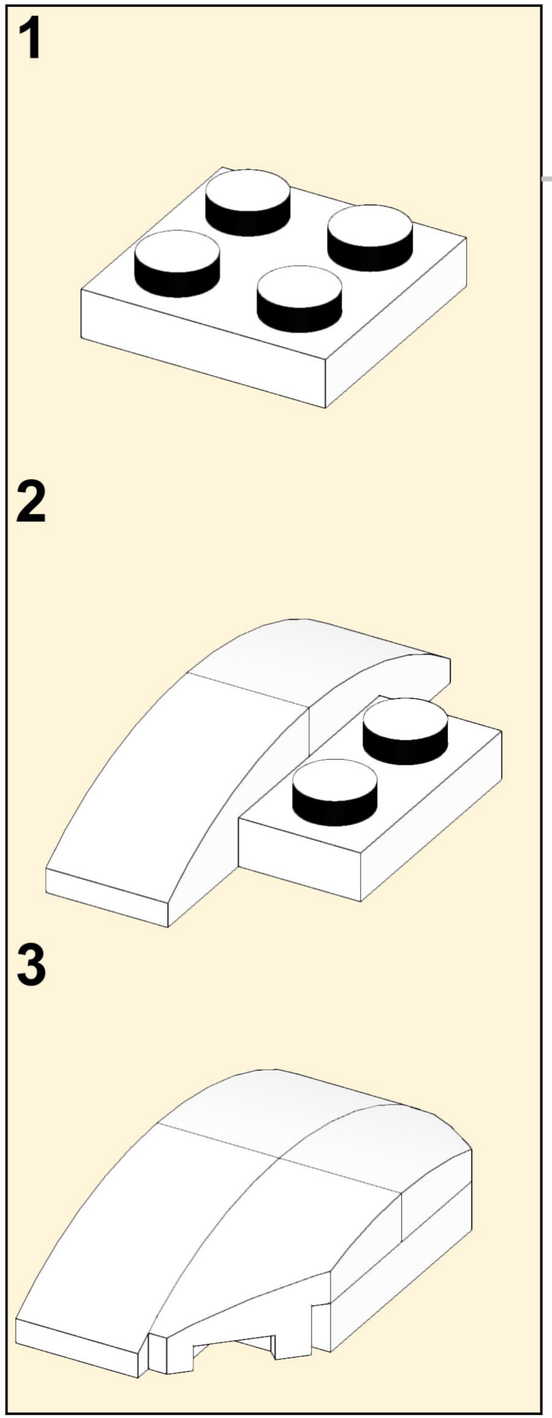

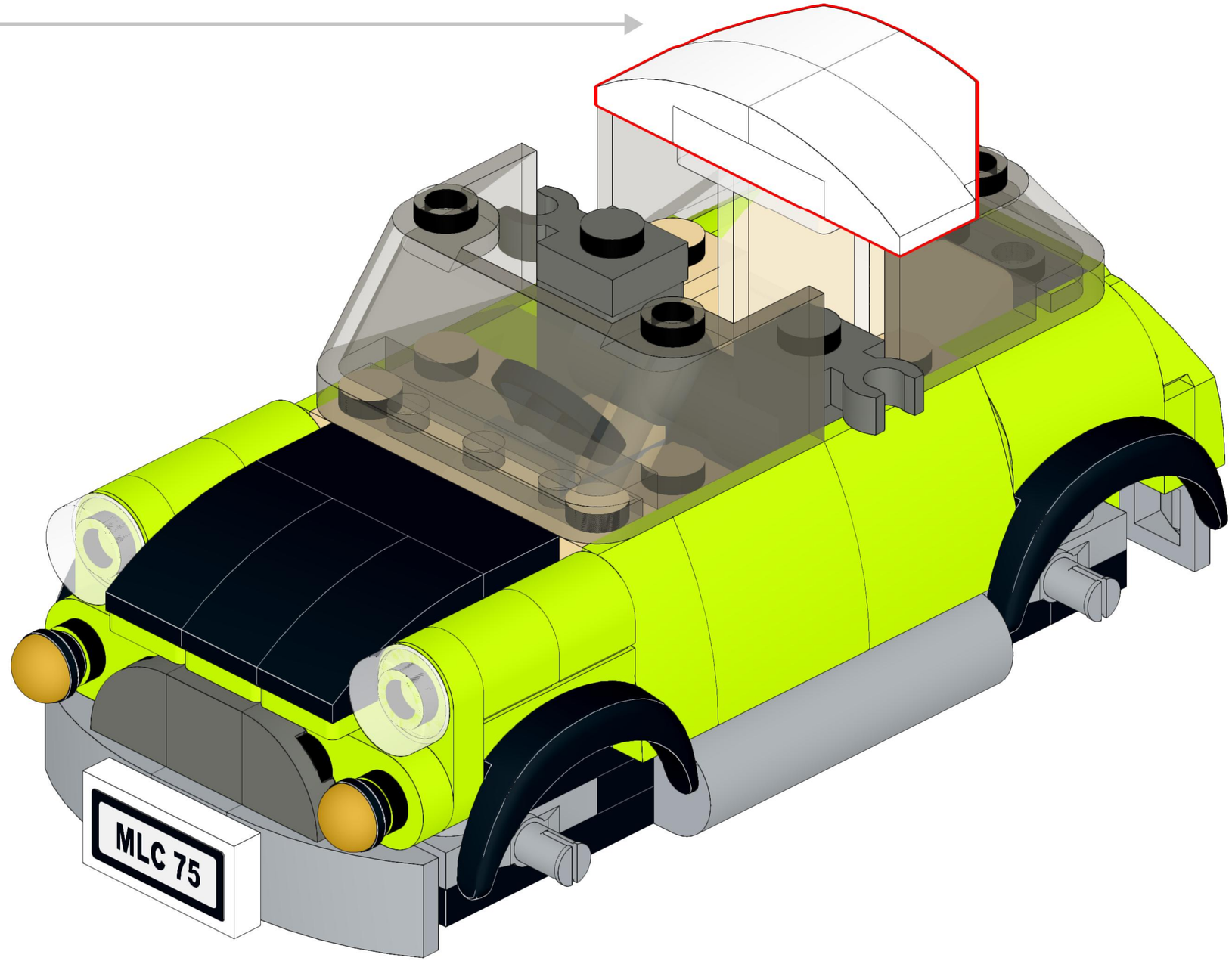

29

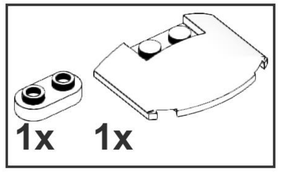

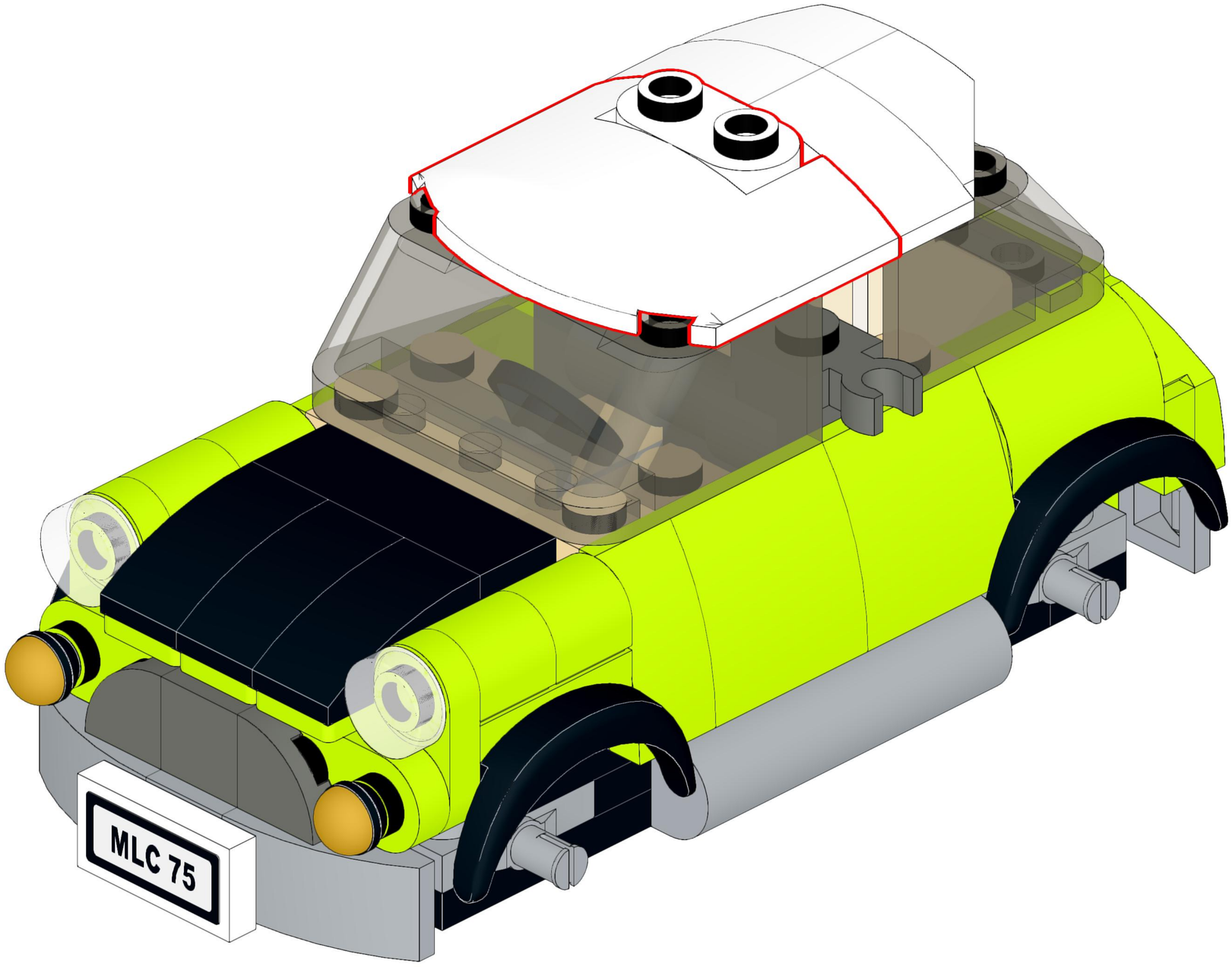

30

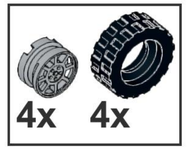

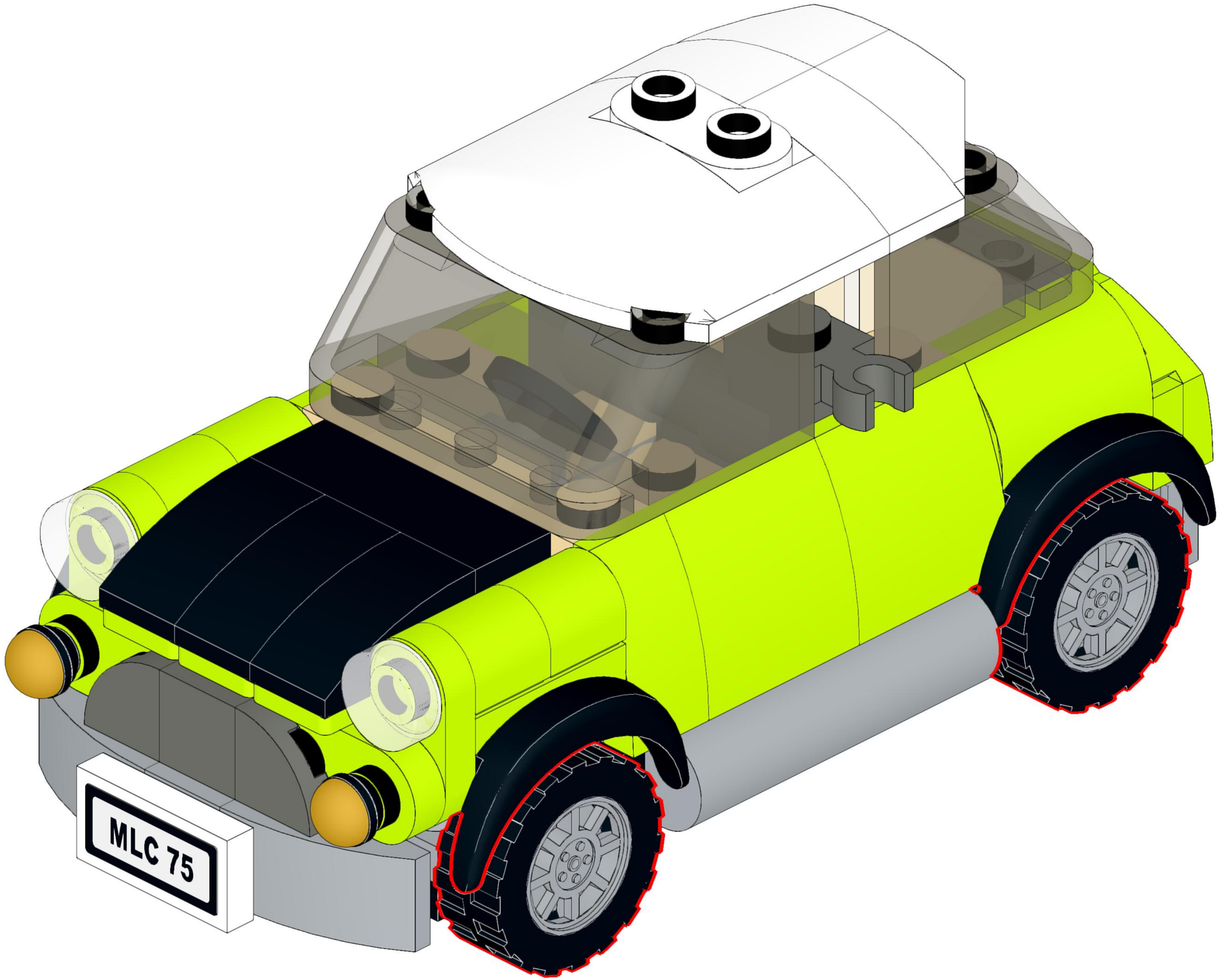

31

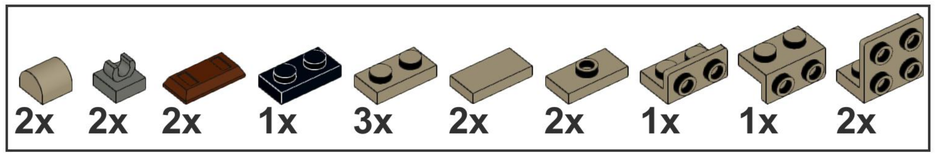

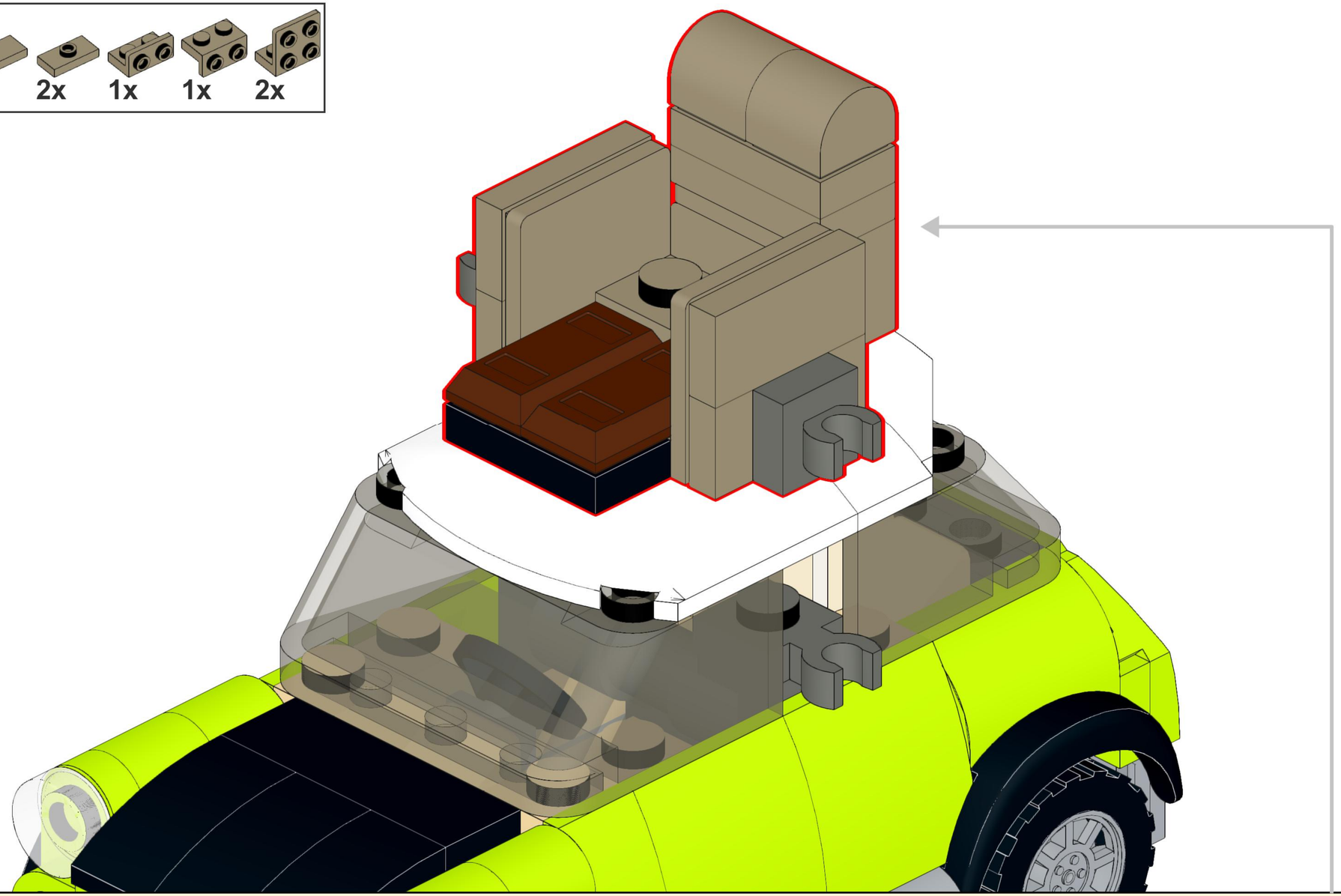

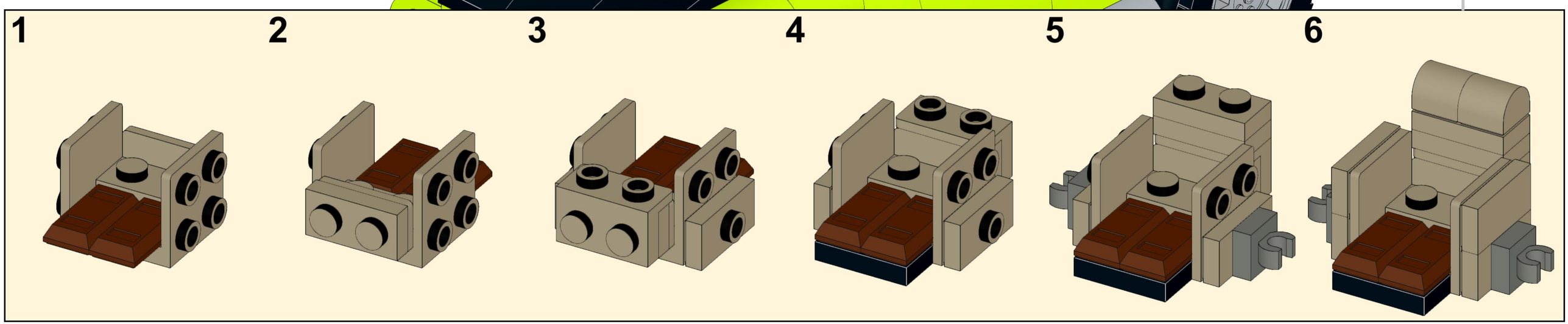

32

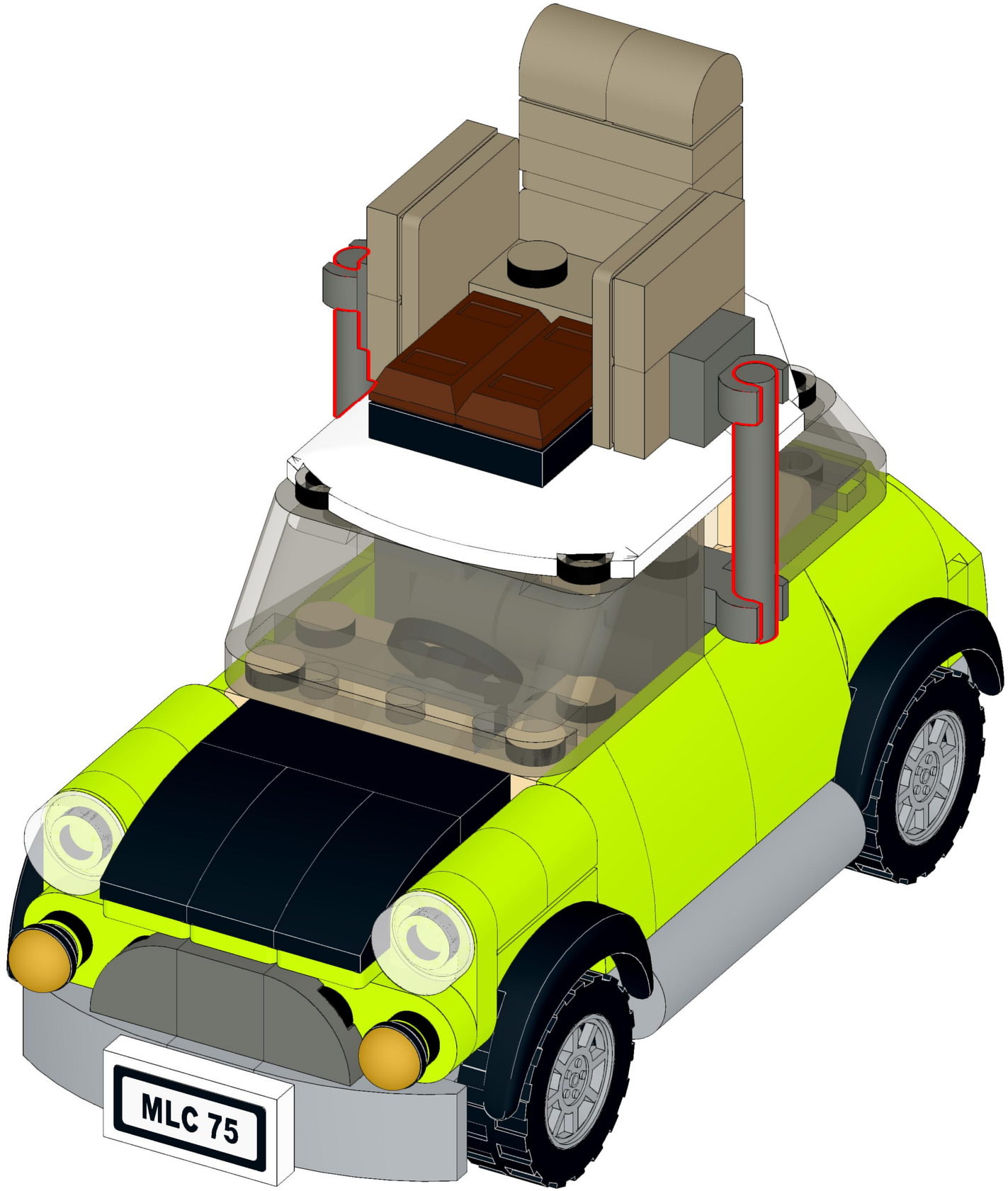

33

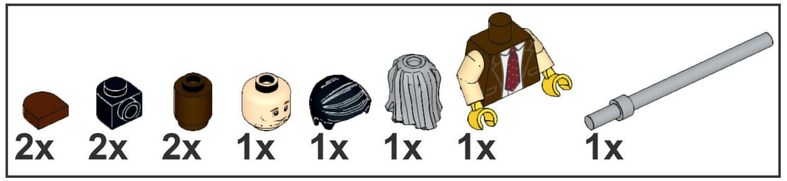

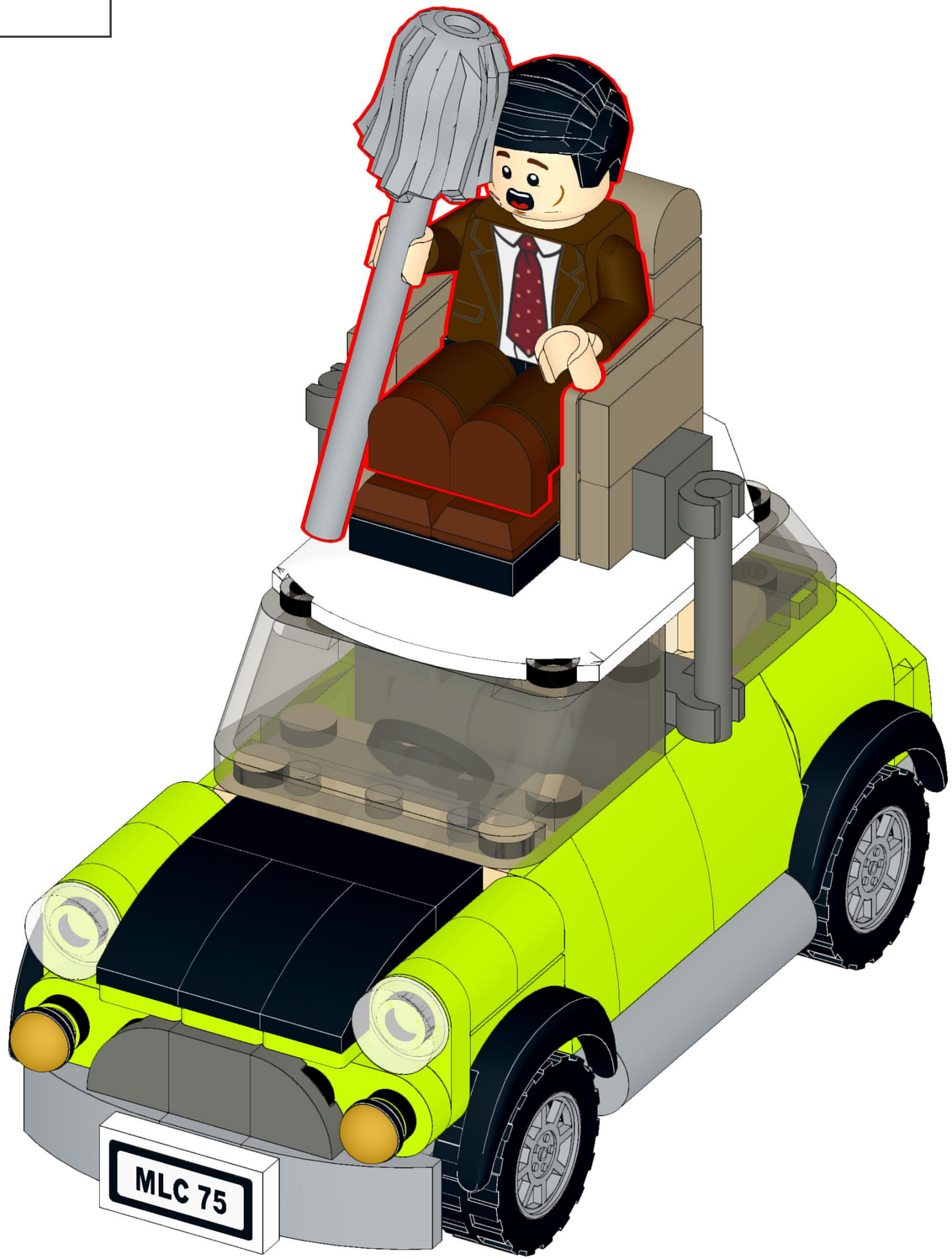

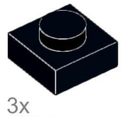

3x
3024
Black

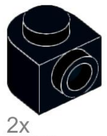

2x
3386
Black

2x
90370pb03
Black

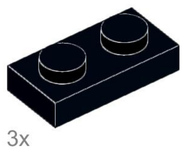

3x
3023
Black

3x
11477
Black

1x
99930
Black

1x
3022
Black

4x
92409
Black

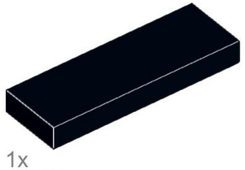

1x
63864
Black

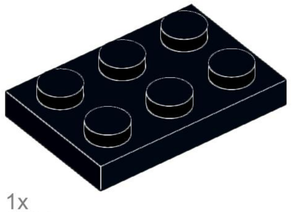

1x
3021
Black

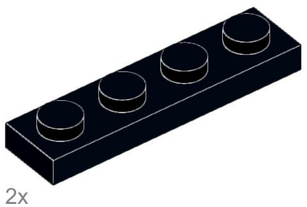

2x
3710
Black

4x
49097
Black

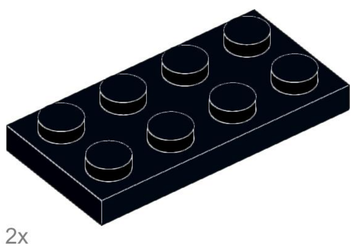

2x
3020
Black

1x
3035
Black

2x
25269
Dark Bluish Gray

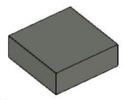

1x
3070
Dark Bluish Gray

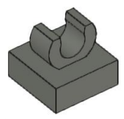

2x
15712
Dark Bluish Gray

2x
3062
Dark Bluish Gray

3x
6541
Dark Bluish Gray

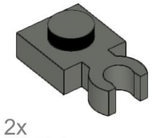

2x
4085d
Dark Bluish Gray

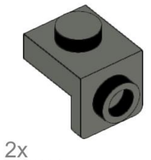

2x
36841
Dark Bluish Gray

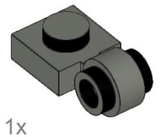

1x
4081b
Dark Bluish Gray

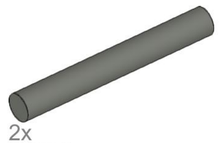

2x
87994
Dark Bluish Gray

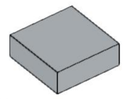

1x
3070
Light Bluish Gray

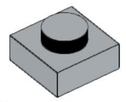

6x
3024
Light Bluish Gray

1x
85861
Light Bluish Gray

4x
4073
Light Bluish Gray

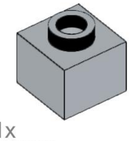

1x
86996
Light Bluish Gray

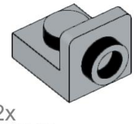

2x
36840
Light Bluish Gray

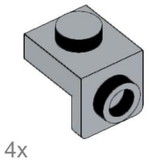

4x
36841
Light Bluish Gray

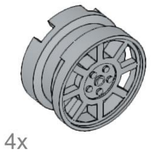

4x
93593
Light Bluish Gray

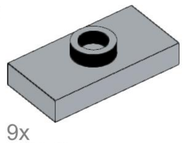

9x
15573
Light Bluish Gray

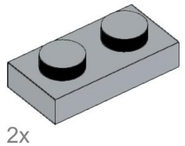

2x
3023
Light Bluish Gray

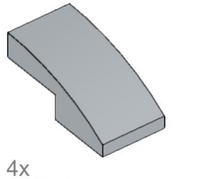

4x
11477
Light Bluish Gray

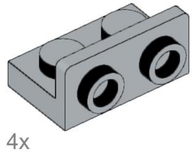

4x
99780
Light Bluish Gray

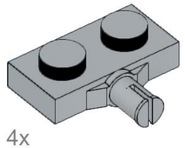

4x
21445
Light Bluish Gray

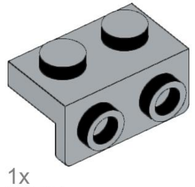

1x
99781
Light Bluish Gray

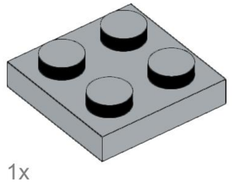

1x
3022
Light Bluish Gray

1x
24085
Light Bluish Gray

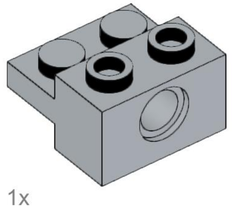

1x
73109
Light Bluish Gray

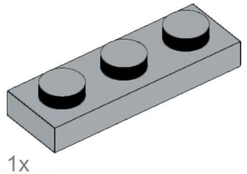

1x
3623
Light Bluish Gray

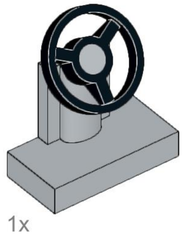

1x
3829c01
Light Bluish Gray

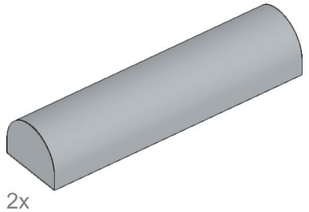

2x
79756
Light Bluish Gray

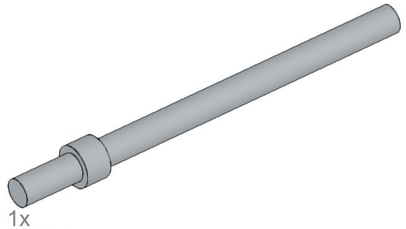

1x
63965
Light Bluish Gray

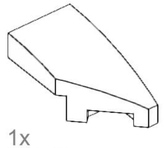

1x
29119
White

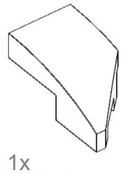

1x
29120
White

1x
35480
White

2x
3069pb0577
White

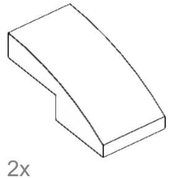

2x
11477
White

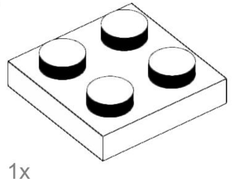

1x
3022
White

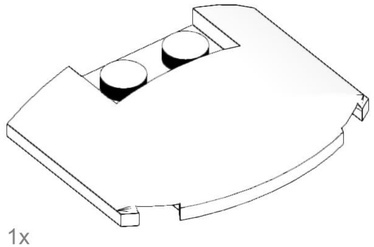

1x
93604
White

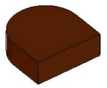

2x
24246
Reddish Brown

2x
99563
Reddish Brown

2x
3062
Dark Brown

1x
973pb4930c01
Dark Brown

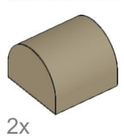

2x
49307
Dark Tan

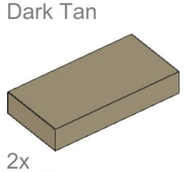

2x
3069
Dark Tan

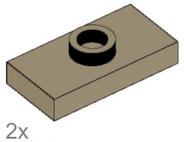

2x
3794b
Dark Tan

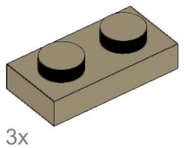

3x
3023
Dark Tan

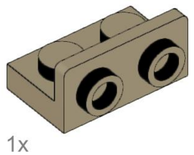

1x
99780
Dark Tan

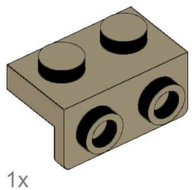

1x
99781
Dark Tan

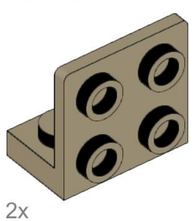

2x
99207
Dark Tan

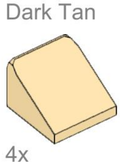

4x
54200
Tan

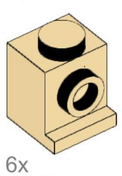

6x
4070
Tan

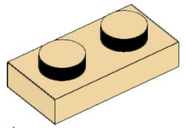

1x
3023
Tan

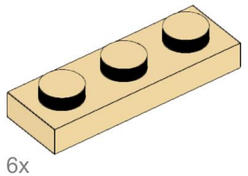

6x
3623
Tan

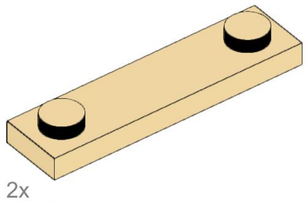

2x
41740
Tan

1x
3626cpb1123
Light Nougat

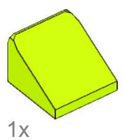

1x
54200
Lime

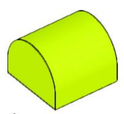

4x
49307
Lime

3x
36840
Lime

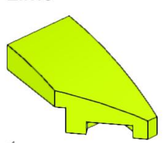

1x
29119
Lime

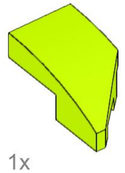

1x
29120
Lime

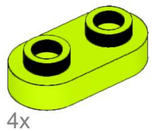

4x
35480
Lime

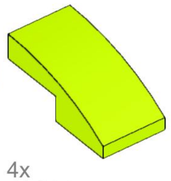

4x
11477
Lime

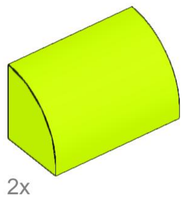

2x
37352
Lime

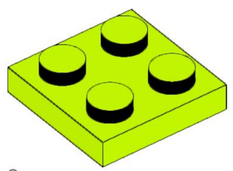

2x
3022
Lime

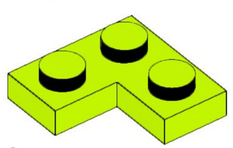

2x
2420
Lime

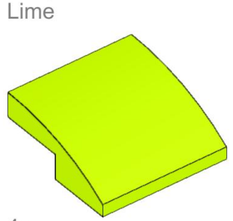

4x
15068
Lime

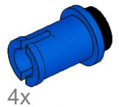

4x
4274
Blue

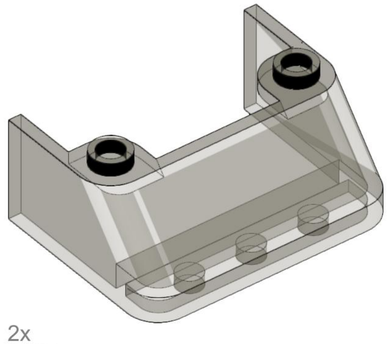

2x
2437
Trans-Brown

2x
98138
Trans-Clear

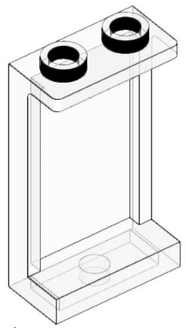

1x
87544
Trans-Clear