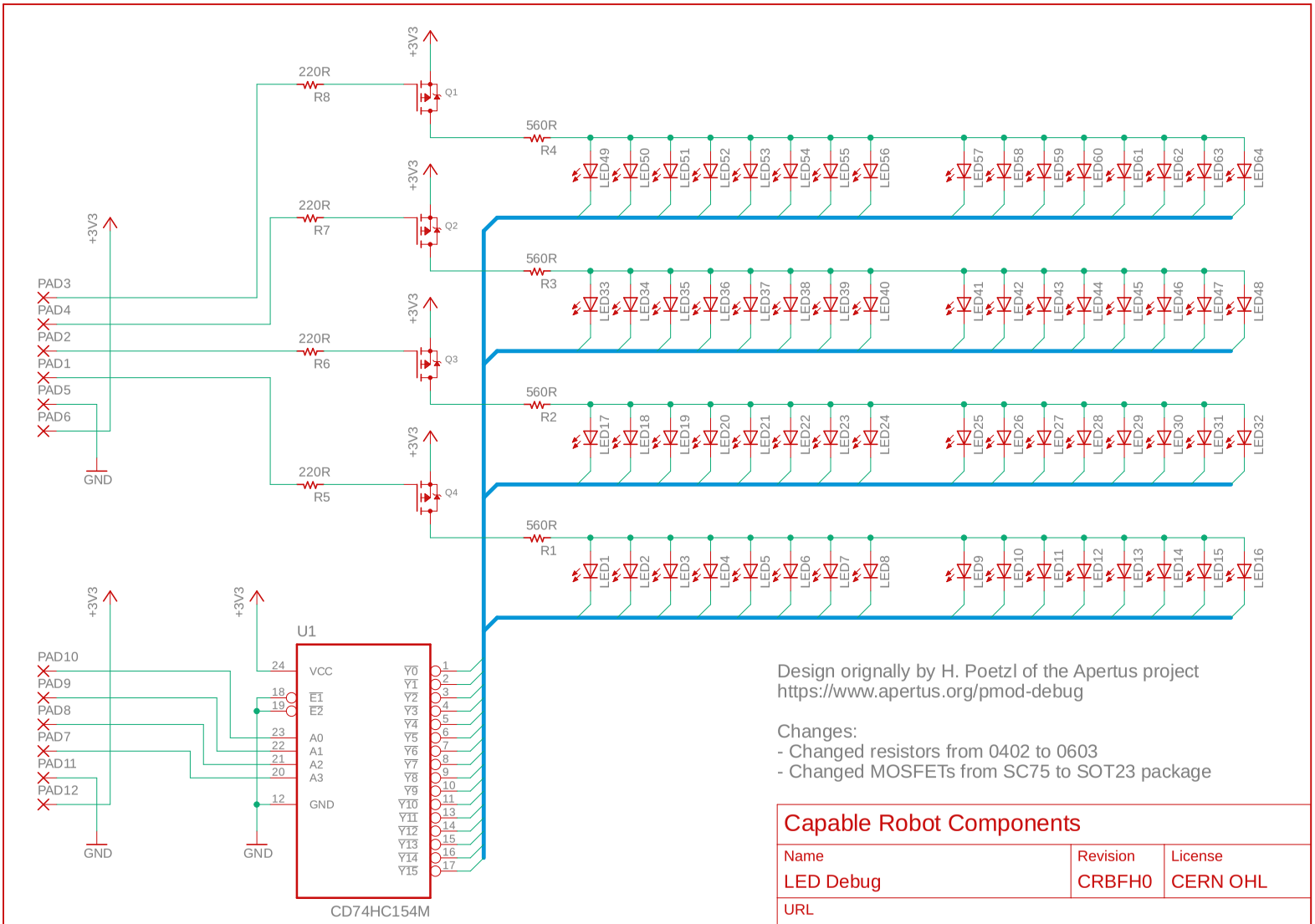

Design orignally by H. Poetzl of the Apertus project
https://www.apertus.org/pmod-debug

Changes:
- Changed resistors from 0402 to 0603
- Changed MOSFETs from SC75 to SOT23 package

Capable Robot Components		
Name LED Debug	Revision CRBFH0	License CERN OHL
URL https://github.com/CapableRobot/PMOD-Adapters		
Date 1/3/19 11:44 AM		Sheet 1/1