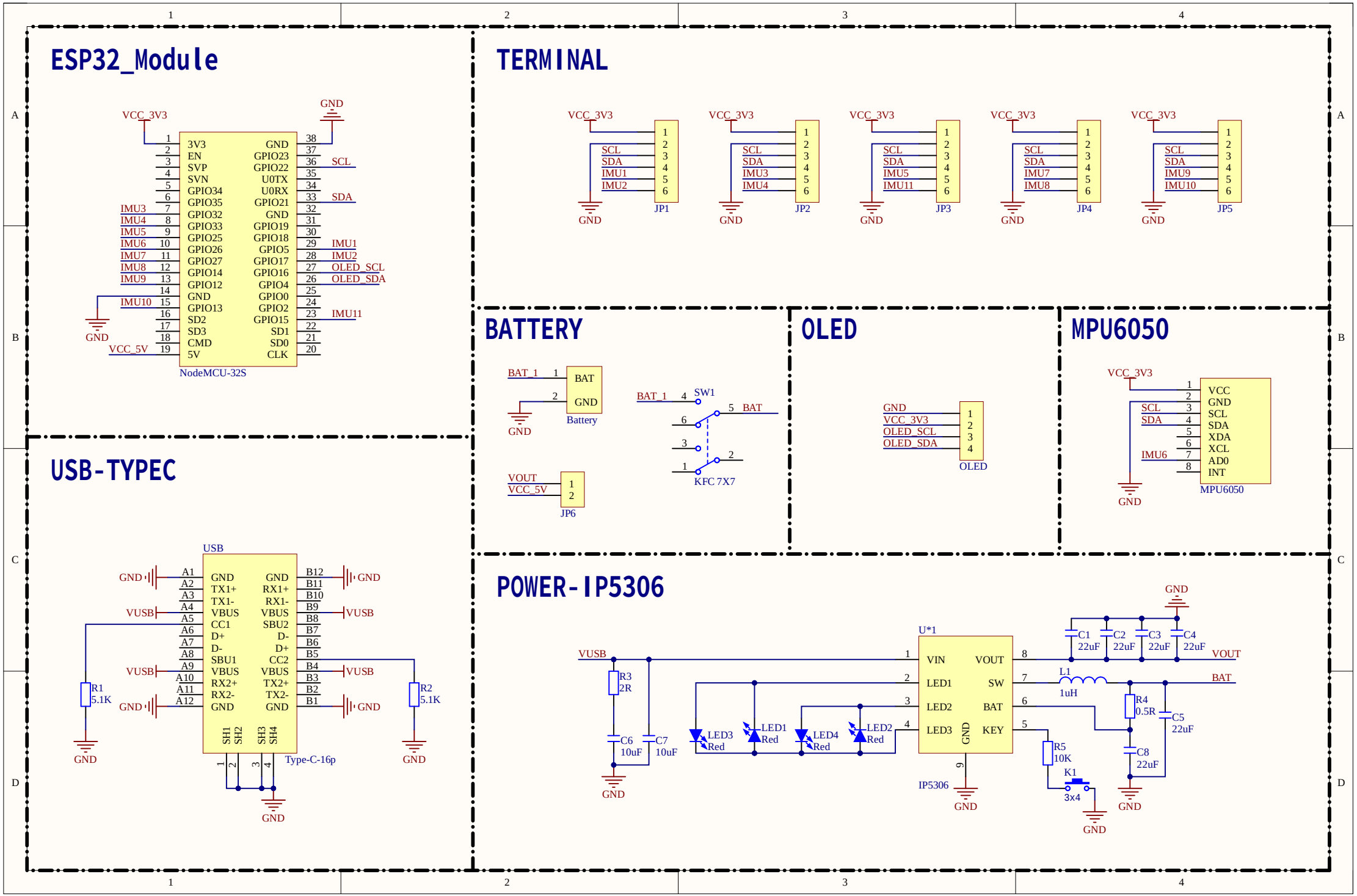
ESP32_Module
VCC_3V3
GND
3V3
EN
SVP
SVN
GPIO34
GPIO35
GPIO32
GPIO33
GPIO25
GPIO26
GPIO27
GPIO14
GPIO12
GND
GPIO13
SD2
SD3
CMD
5V
GND
GPIO23
GPIO22
U0TX
U0RX
GPIO21
GND
GPIO19
GPIO18
GPIO5
GPIO17
GPIO16
GPIO4
GPIO0
GPIO2
GPIO15
SD1
SD0
CLK
SCL
SDA
IMU1
IMU2
IMU3
IMU4
IMU5
IMU6
IMU7
IMU8
IMU9
IMU10
IMU11
OLED_SCL
OLED_SDA
VCC_5V
NodeMCU-32S
TERMINAL
JP1
JP2
JP3
JP4
JP5
IMU11
BATTERY
BAT_1
BAT
GND
Battery
SW1
KFC 7X7
VOUT
VCC_5V
JP6
OLED
VCC_3V3
OLED_SCL
OLED_SDA
OLED
MPU6050
VCC
GND
SCL
SDA
XDA
XCL
AD0
INT
IMU6
MPU6050
USB-TYPEC
USB
VUSB
R1
5.1K
R2
5.1K
SH1
SH2
SH3
SH4
Type-C-16p
POWER-IP5306
U*1
VIN
VOUT
LED1
SW
LED2
BAT
LED3
KEY
IP5306
R3
2R
C6
10uF
C7
10uF
LED3
Red
LED1
Red
LED4
Red
LED2
Red
C1
22uF
C2
22uF
C3
22uF
C4
22uF
L1
1uH
R4
0.5R
C5
22uF
C8
22uF
R5
10K
K1
3x4