ROBOT CONFIGURATOR

DESIGN REPORT · MK-1 UNIT · PRINT-MO9WRDN1

Generated: 22/04/2026, 15:56:46
Parts: 28 · Weight: 9.22 kg
Dimensions: W 55.0cm × D 85.1cm × H 26.8cm

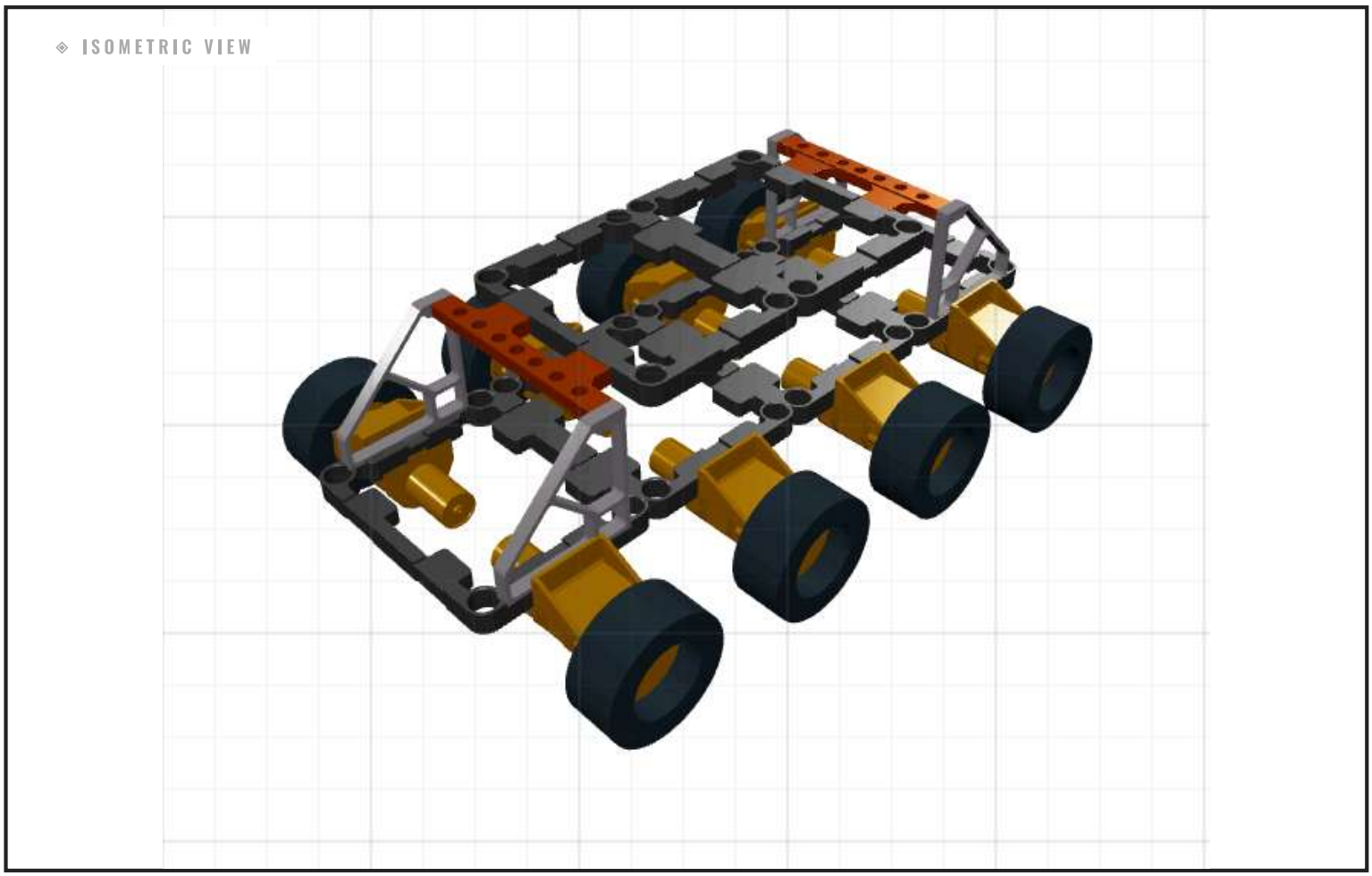

■ ORTHOGRAPHIC VIEWS WITH DIMENSIONS

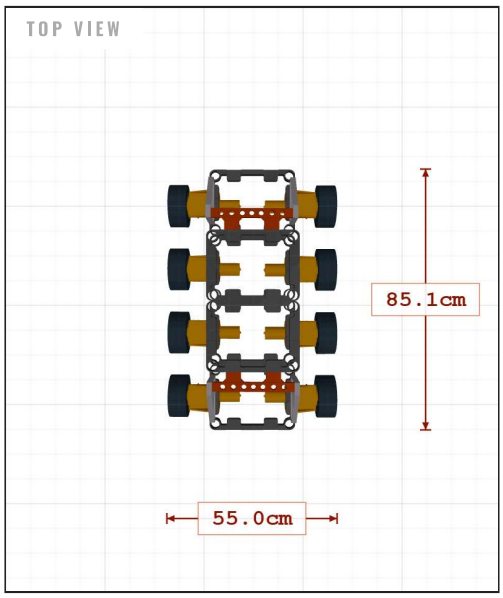

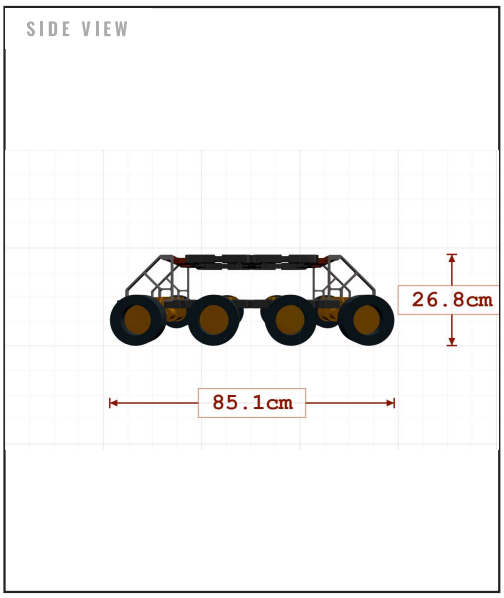

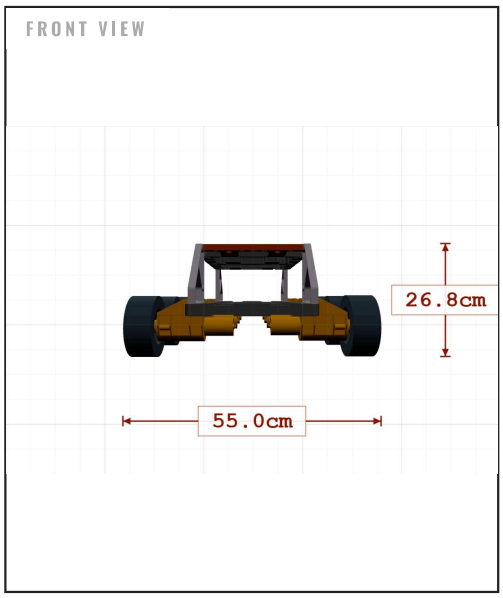

■ COMPONENT DATA

COMPONENT MANIFEST

Type	Qty	Cost
RECTANGULAR FRAME	6	₹14,160

WEIGHT BREAKDOWN

Type	Qty	Unit	Total
RECTANGULAR FRAME	6	450 g ea	2.70 kg

TRIANGULAR FRAME	4	₹9,440
MOTOR ASSEMBLY	8	₹47,200
WHEEL	8	₹59,000
STRESS BRIDGE	2	₹4,720
TOTAL COST		**₹1,34,520**

28 PARTS · 5 TYPES

TRIANGULAR FRAME	4	180 g ea	**720 g**
MOTOR ASSEMBLY	8	380 g ea	**3.04 kg**
WHEEL	8	290 g ea	**2.32 kg**
STRESS BRIDGE	2	220 g ea	**440 g**
TOTAL WEIGHT			**9.22 kg**