ROBOT CONFIGURATOR

DESIGN REPORT · MK-1 UNIT · PRINT-MO9WPLNG

Generated: 22/04/2026, 15:55:23
Parts: 18 · Weight: 5.64 kg
Dimensions: W 55.0cm × D 63.8cm × H 26.8cm

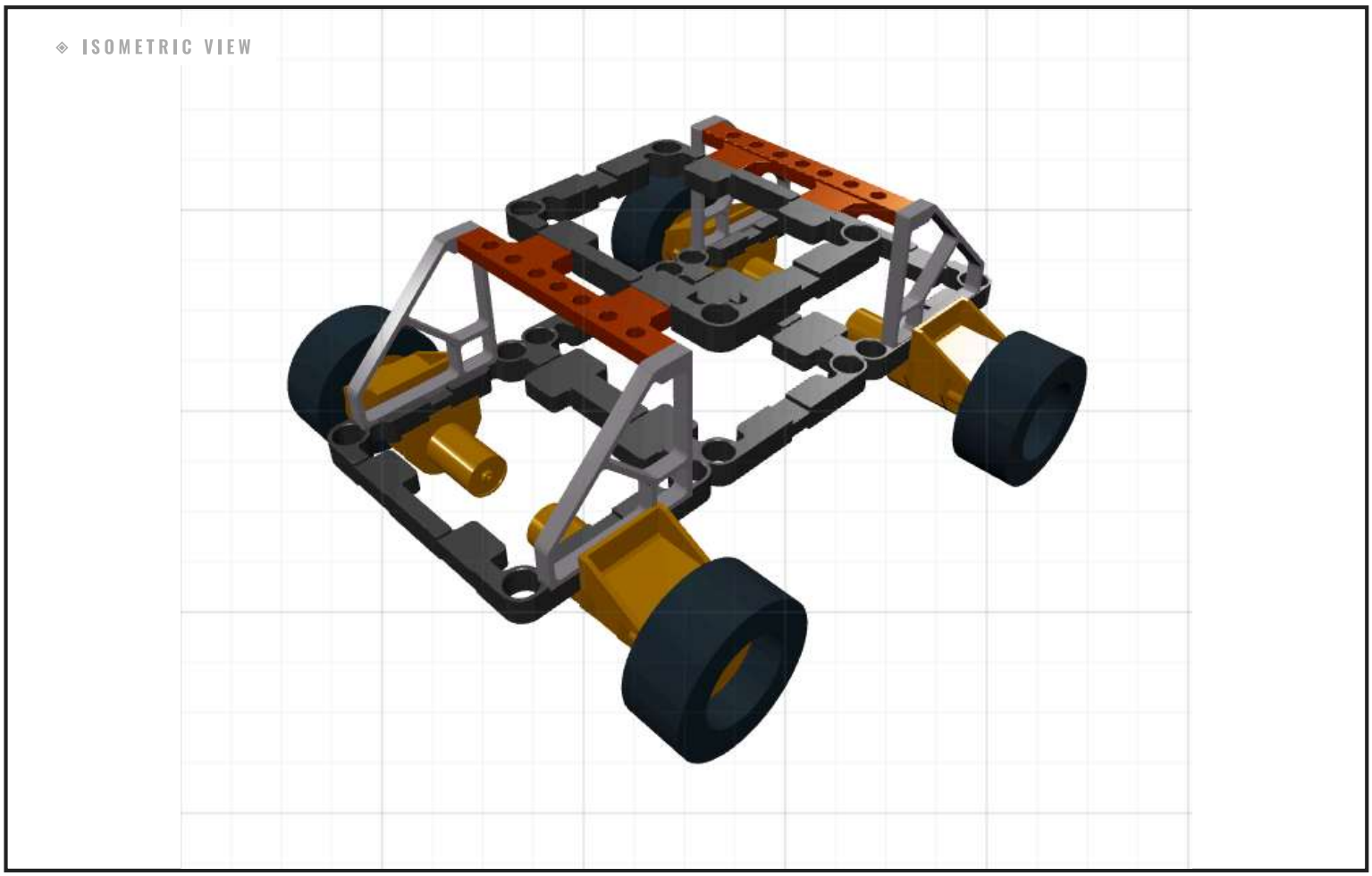

■ ORTHOGRAPHIC VIEWS WITH DIMENSIONS

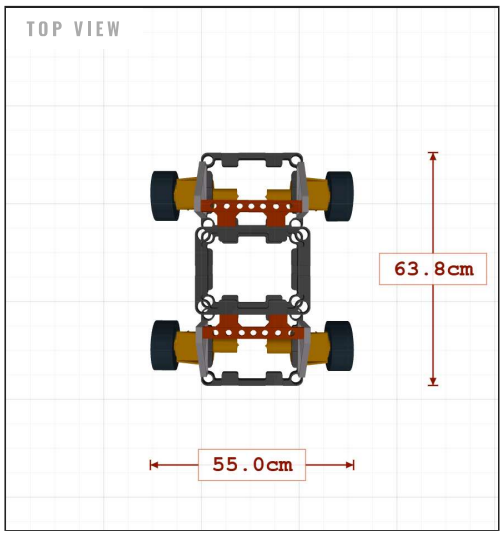

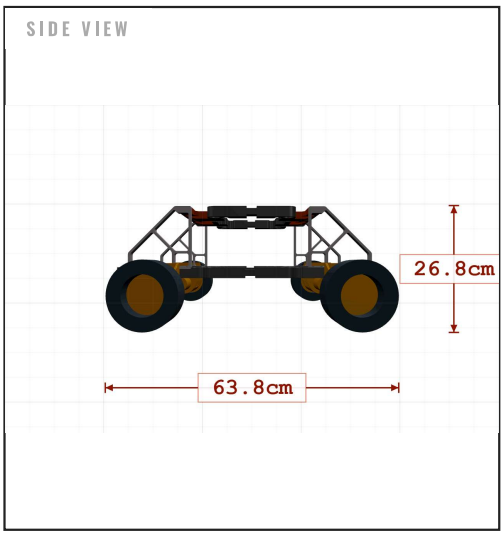

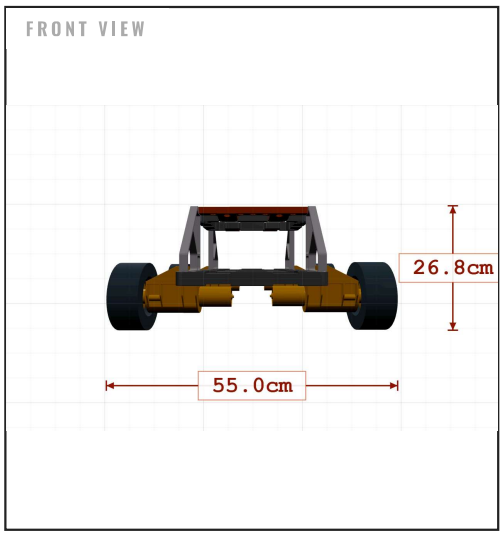

■ COMPONENT DATA

COMPONENT MANIFEST

Type	Qty	Cost
RECTANGULAR FRAME	4	₹9,440

WEIGHT BREAKDOWN

Type	Qty	Unit	Total
RECTANGULAR FRAME	4	450 g ea	1.80 kg

TRIANGULAR FRAME	4	₹9,440
STRESS BRIDGE	2	₹4,720
MOTOR ASSEMBLY	4	₹23,600
WHEEL	4	₹29,500
TOTAL COST		**₹76,700**

18 PARTS · 5 TYPES

TRIANGULAR FRAME	4	180 g ea	**720 g**
STRESS BRIDGE	2	220 g ea	**440 g**
MOTOR ASSEMBLY	4	380 g ea	**1.52 kg**
WHEEL	4	290 g ea	**1.16 kg**
TOTAL WEIGHT			**5.64 kg**