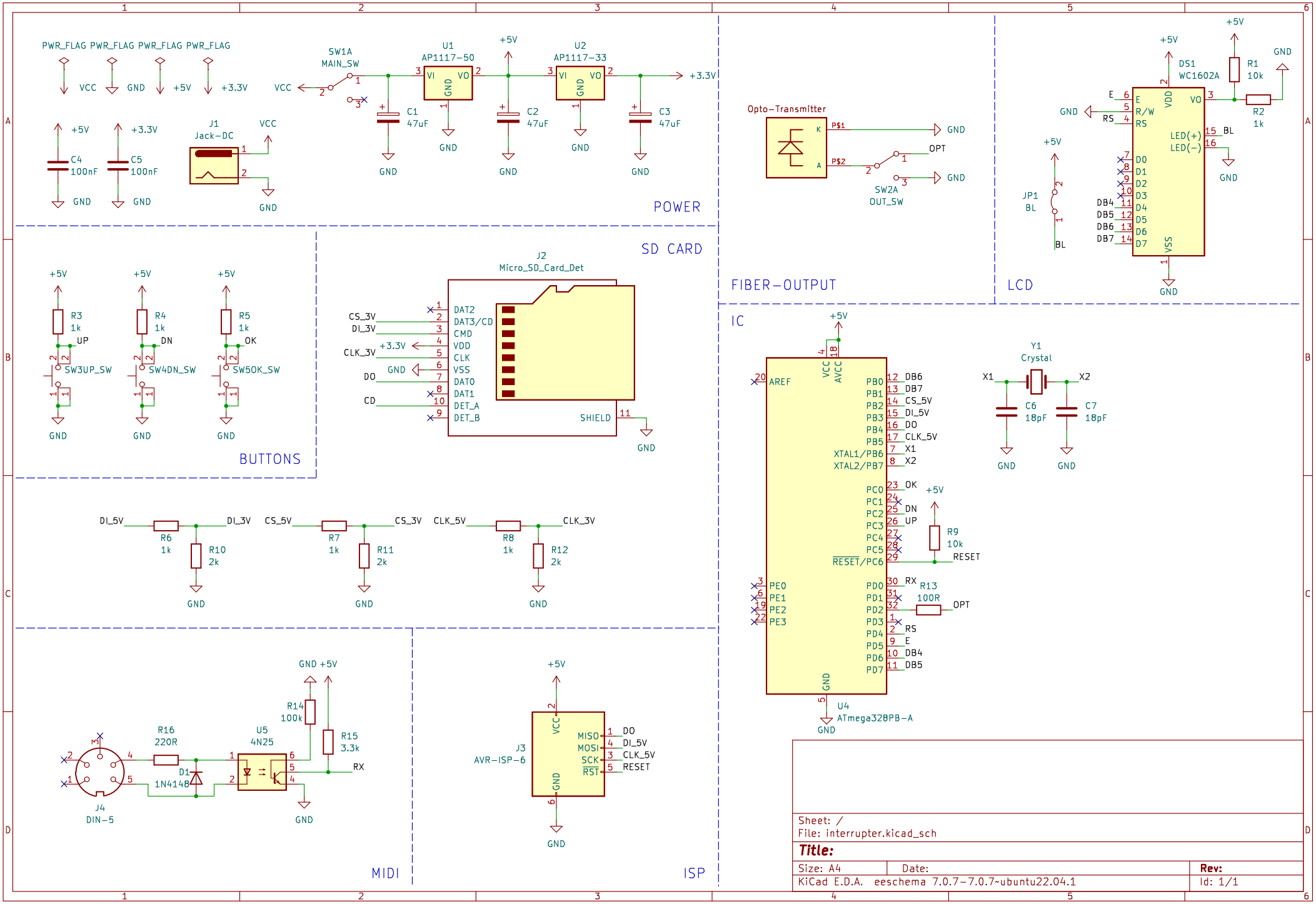
POWER
PWR_FLAG PWR_FLAG PWR_FLAG PWR_FLAG
VCC GND +5V +3.3V
SW1A
MAIN_SW
U1
AP1117-50
U2
AP1117-33
C1 47uF
C2 47uF
C3 47uF
C4 100nF
C5 100nF
J1
Jack-DC
SD CARD
J2
Micro_SD_Card_Det
DAT2
DAT3/CD
CMD
VDD
CLK
VSS
DAT0
DAT1
DET_A
DET_B
SHIELD
CS_3V
DI_3V
CLK_3V
DO
CD
BUTTONS
R3 1k
R4 1k
R5 1k
UP
DN
OK
SW3UP_SW
SW4DN_SW
SW5OK_SW
R6 1k
R10 2k
R7 1k
R11 2k
R8 1k
R12 2k
DI_5V
CS_5V
CLK_5V
MIDI
J4
DIN-5
R16 220R
D1 1N4148
U5
4N25
R14 100k
R15 3.3k
RX
ISP
J3
AVR-ISP-6
MISO
MOSI
SCK
RST
FIBER-OUTPUT
Opto-Transmitter
P$1
P$2
OPT
SW2A
OUT_SW
LCD
DS1
WC1602A
R1 10k
R2 1k
JP1
BL
E
R/W
RS
VO
LED(+)
LED(-)
DB4
DB5
DB6
DB7
IC
U4
ATmega328PB-A
AREF
VCC
AVCC
PB0
PB1
PB2
PB3
PB4
PB5
XTAL1/PB6
XTAL2/PB7
PC0
PC1
PC2
PC3
PC4
PC5
RESET/PC6
PE0
PE1
PE2
PE3
PD0
PD1
PD2
PD3
PD4
PD5
PD6
PD7
Y1
Crystal
X1
X2
C6 18pF
C7 18pF
R9 10k
R13 100R
Sheet: /
File: interrupter.kicad_sch
Title:
Size: A4
Date:
Rev:
KiCad E.D.A. eeschema 7.0.7-7.0.7~ubuntu22.04.1
Id: 1/1