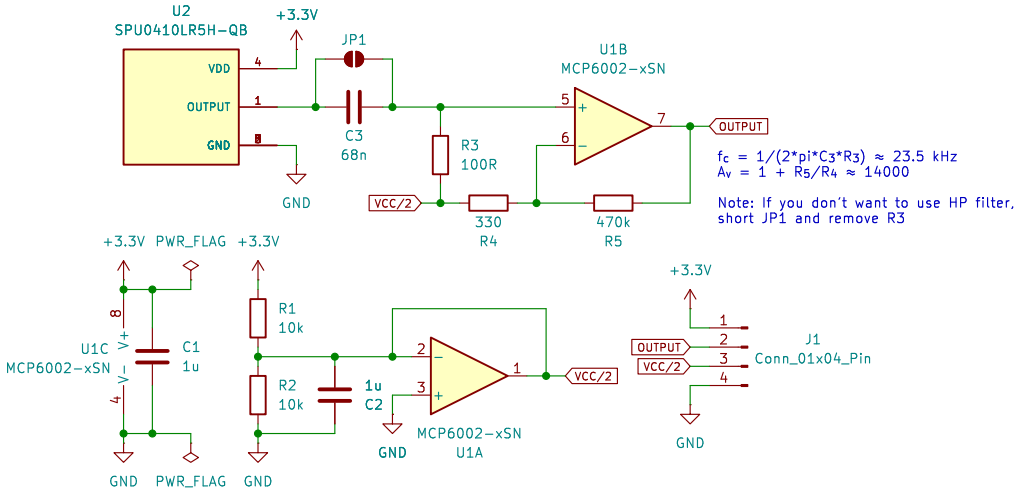

Sheet: /
File: SPU0410LR5H.kicad_sch

Title: SPU0410LR5H breakout board with HPF

Size: A5	Date:	Rev:
KiCad E.D.A. 8.0.8		Id: 1/1