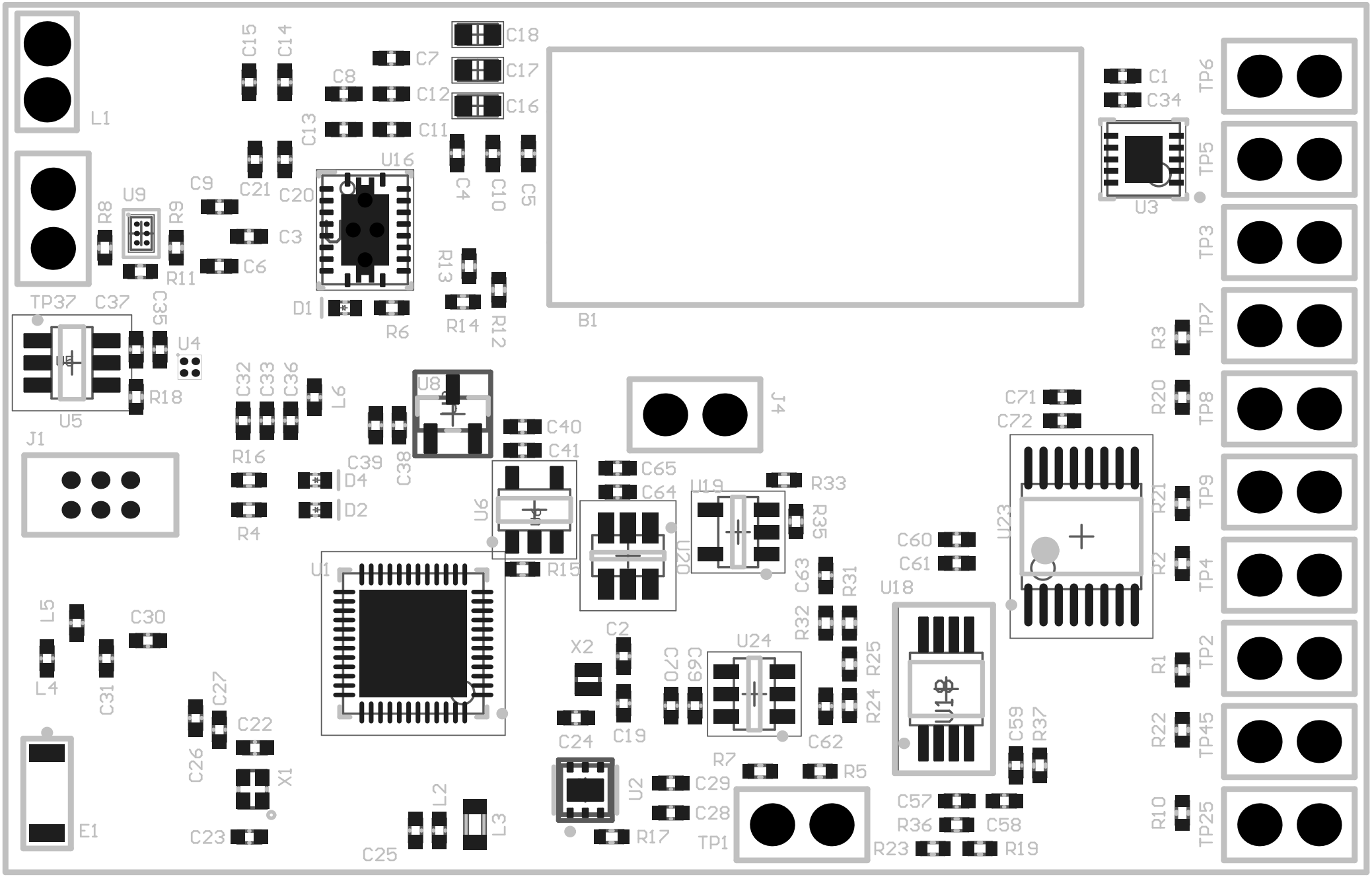
L1
C15
C14
C18
C7
C8
C17
C12
C16
C13
C11
U16
C4
C10
C5
C1
C34
TP6
TP5
U3
U9
C9
C21
C20
R8
R9
C3
C6
R11
R13
R14
R12
B1
TP37
C37
C35
D1
R6
U4
U5
R18
R3
TP7
C32
C33
C36
L6
U8
J4
C71
C72
R20
TP8
J1
R16
C39
C38
C40
C41
C65
C64
U19
R33
R35
D4
D2
U6
R4
R15
U20
U23
C60
C61
R21
TP9
U1
C63
R31
R2
TP4
U18
L5
C30
R32
C2
X2
U24
R25
R1
TP2
L4
C31
C27
C70
C69
R24
C22
C24
C19
C62
C59
R37
R22
TP45
C26
X1
R7
R5
U2
C29
C28
C57
R36
C58
R10
TP25
E1
C23
L2
L3
C25
R17
TP1
R23
R19

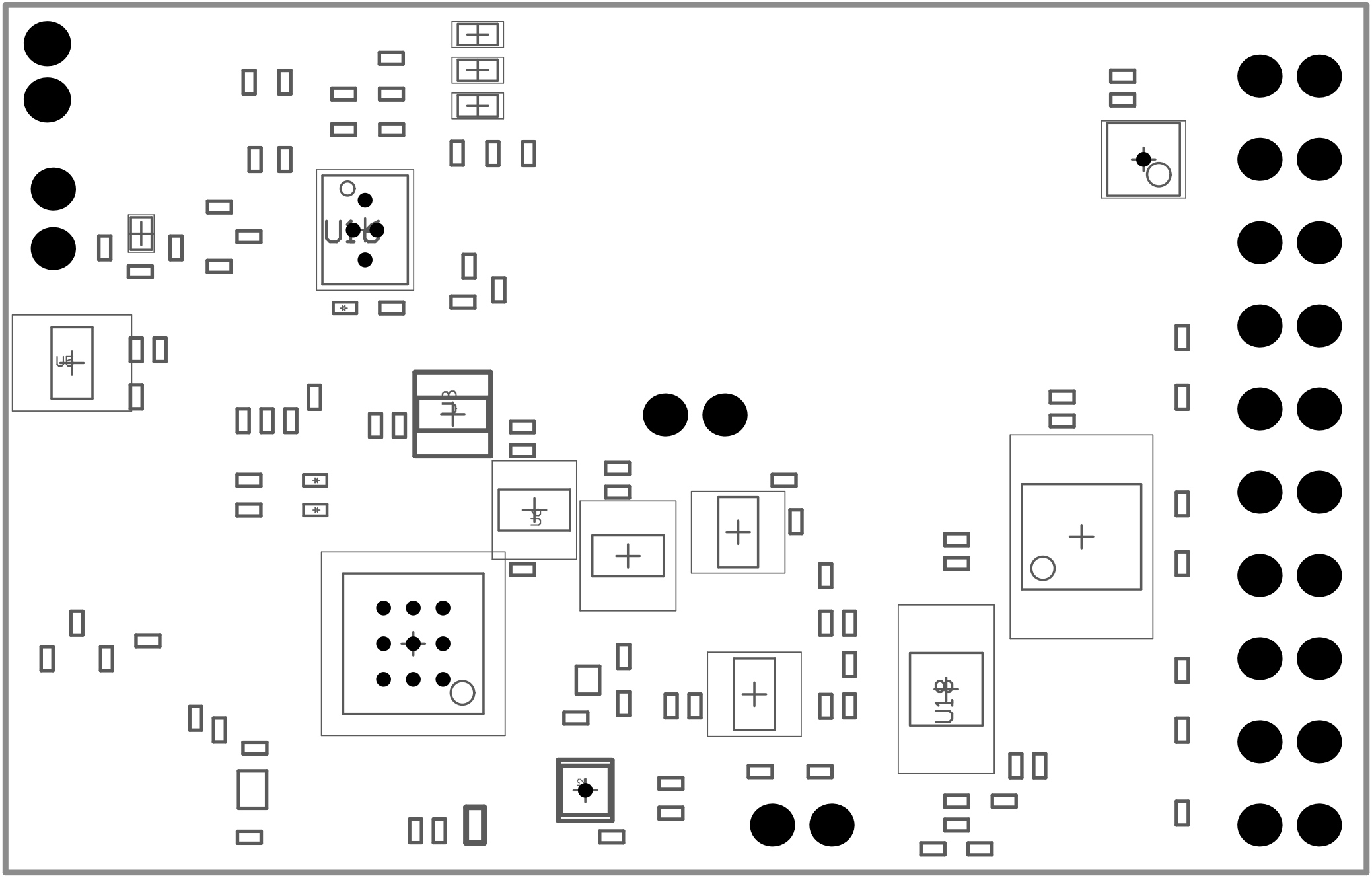
U16
U18

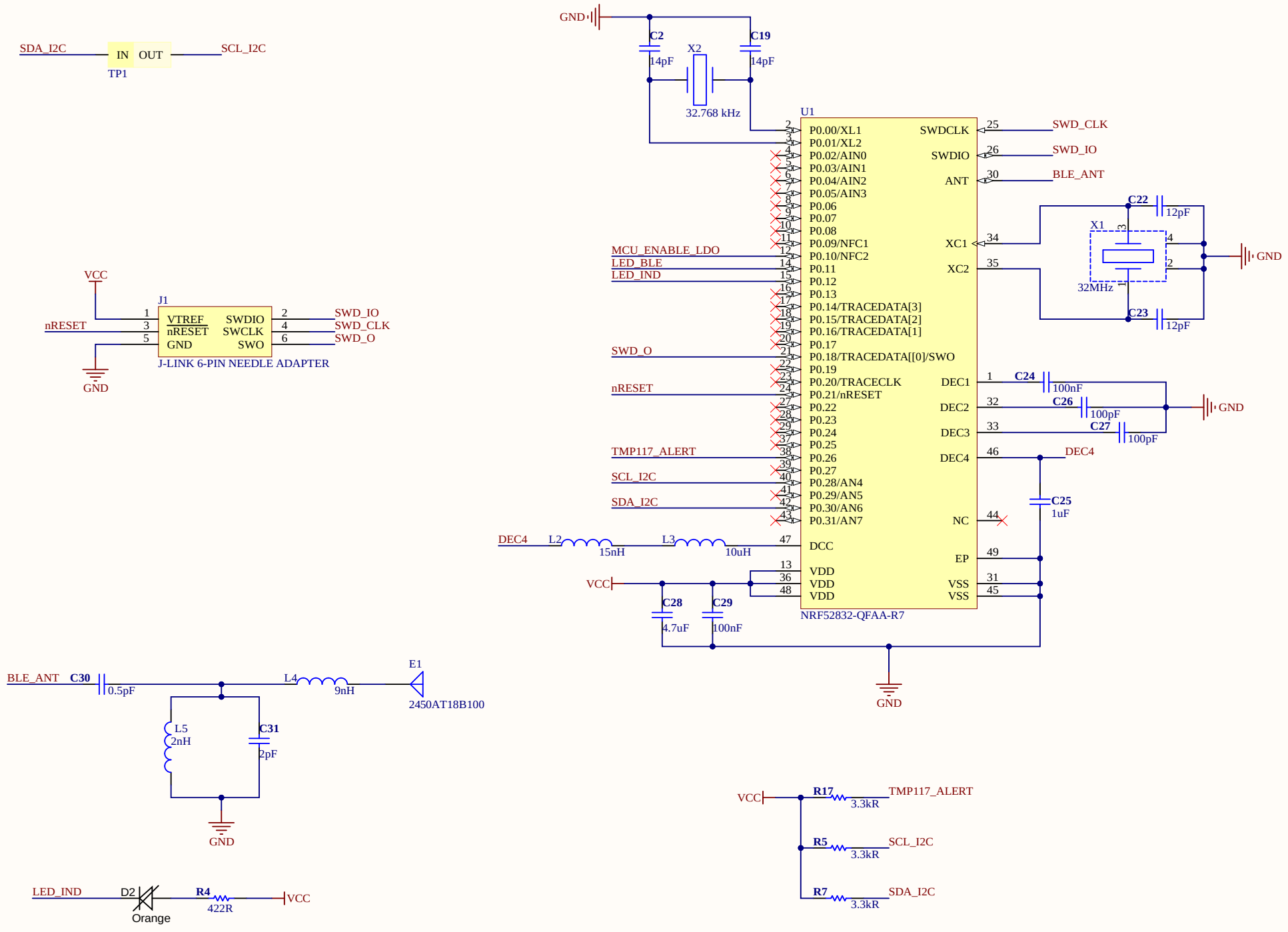
SDA_I2C
IN
OUT
SCL_I2C
TP1
GND
C2
14pF
X2
32.768 kHz
C19
14pF
U1
P0.00/XL1
P0.01/XL2
P0.02/AIN0
P0.03/AIN1
P0.04/AIN2
P0.05/AIN3
P0.06
P0.07
P0.08
P0.09/NFC1
P0.10/NFC2
P0.11
P0.12
P0.13
P0.14/TRACEDATA[3]
P0.15/TRACEDATA[2]
P0.16/TRACEDATA[1]
P0.17
P0.18/TRACEDATA[[0]/SWO
P0.19
P0.20/TRACECLK
P0.21/nRESET
P0.22
P0.23
P0.24
P0.25
P0.26
P0.27
P0.28/AN4
P0.29/AN5
P0.30/AN6
P0.31/AN7
DCC
VDD
VDD
VDD
SWDCLK
SWDIO
ANT
XC1
XC2
DEC1
DEC2
DEC3
DEC4
NC
EP
VSS
VSS
NRF52832-QFAA-R7
SWD_CLK
SWD_IO
BLE_ANT
C22
12pF
X1
32MHz
C23
12pF
GND
MCU_ENABLE_LDO
LED_BLE
LED_IND
SWD_O
nRESET
TMP117_ALERT
SCL_I2C
SDA_I2C
C24
100nF
C26
100pF
C27
100pF
DEC4
C25
1uF
DEC4
L2
15nH
L3
10uH
VCC
C28
4.7uF
C29
100nF
GND
VCC
J1
VTREF
nRESET
GND
SWDIO
SWCLK
SWO
SWD_IO
SWD_CLK
SWD_O
J-LINK 6-PIN NEEDLE ADAPTER
nRESET
GND
BLE_ANT
C30
0.5pF
L4
9nH
E1
2450AT18B100
L5
2nH
C31
2pF
GND
VCC
R17
3.3kR
TMP117_ALERT
R5
3.3kR
SCL_I2C
R7
3.3kR
SDA_I2C
LED_IND
D2
Orange
R4
422R
VCC
LED_BLE
D4
Red
R16
422R
VCC
Title MCU + BLE
Size: Letter
Number: P001
Revision: X01
Date: 10/20/2020
Time: 11:37:24 AM
Sheet 1 of 4
File: C:\Users\cdemolde\Documents\GitHub\GT-BITNG\Projects\PNW\Electrical\Sensor_Glove-X01\Sensor_Glove_Main-X01
GEORGIA TECH
NORTH AVE NW
ATLANTA, GA, 30332
Altium

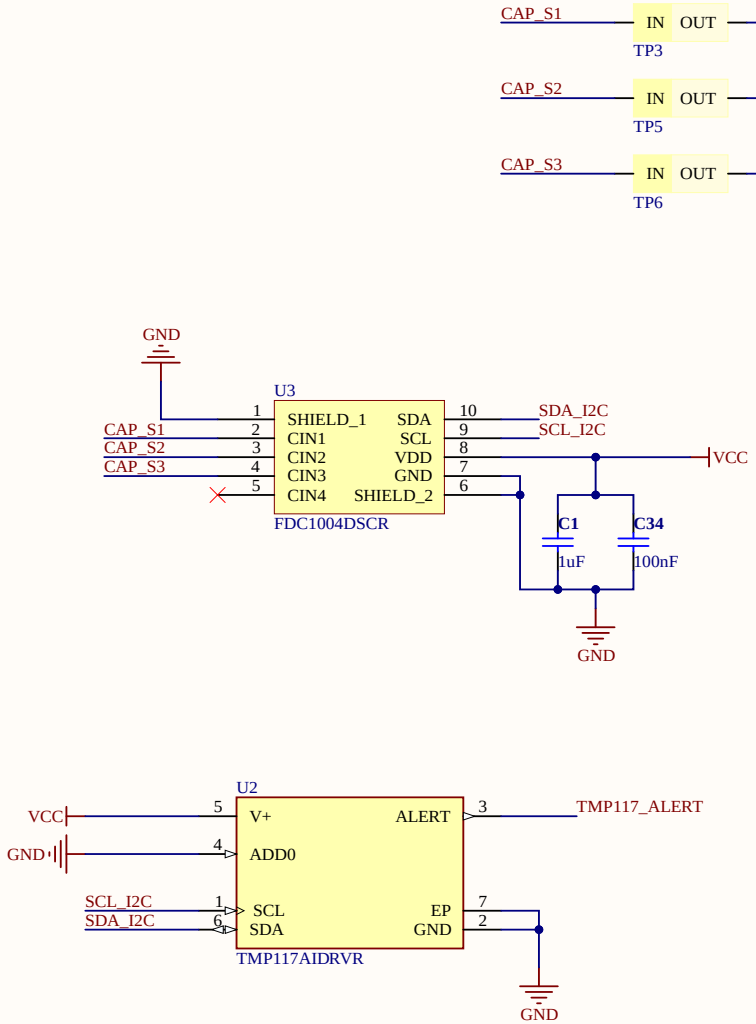

Title	***PHERIPHERALS***		*GEORGIA TECH*
Size: Letter	Number: P001	Revision: X01	*NORTH AVE NW*
Date: 10/20/2020	Time: 11:37:24 AM	Sheet 2 of 4	*ATLANTA, GA, 30332*
File: C:\Users\cdemolde\Documents\GitHub\GT-BITNG\Projects\PNW\Electrical\Sensor_Glove-X01\Sensor_Glove_Pheripher			*
			*

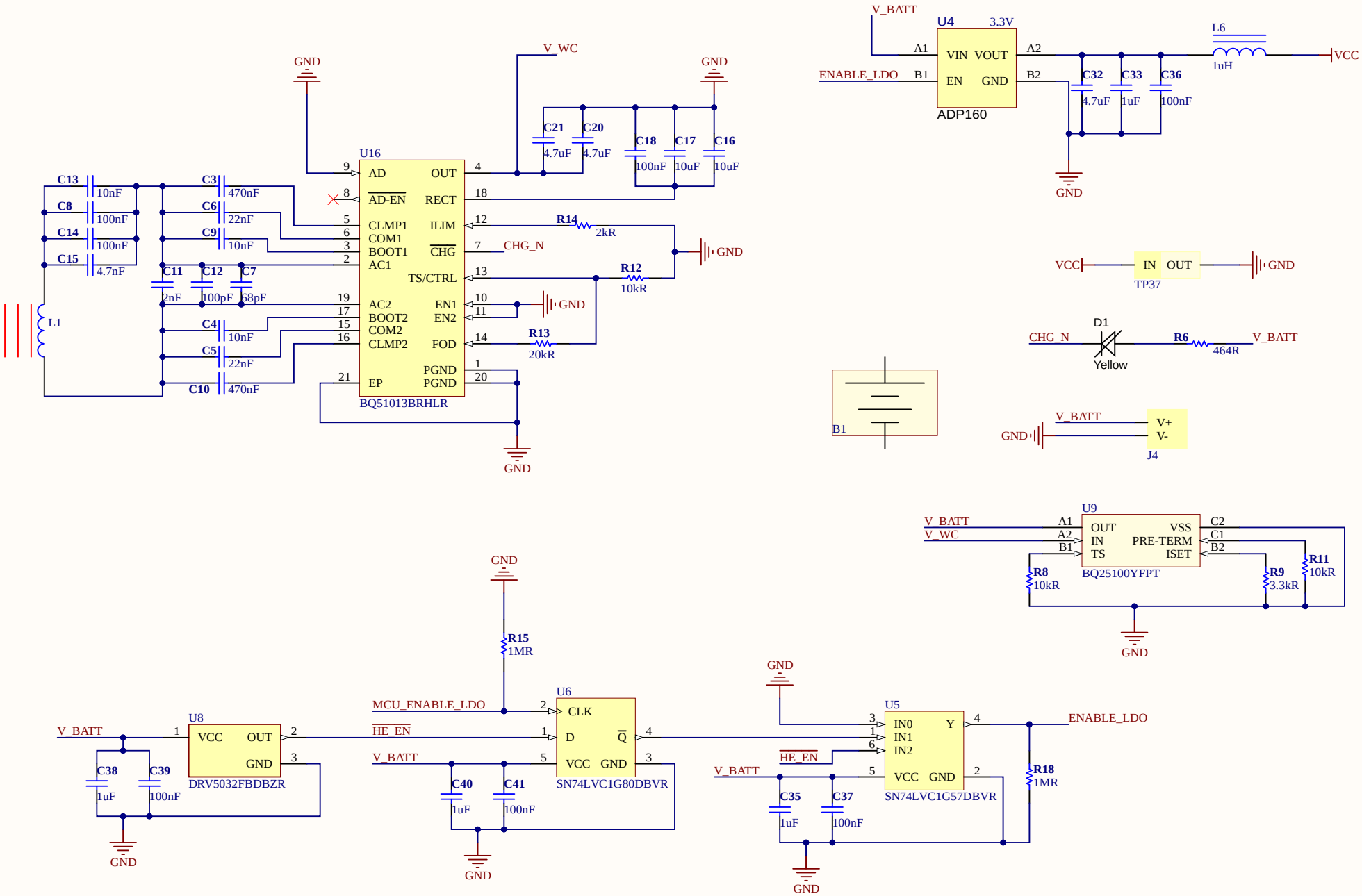

Title	SENSOR GLOVE POWER		GEORGIA TECH NORTH AVE NW ATLANTA, GA, 30332 * *
Size: Letter	Number: P001	Revision: X01	
Date: 10/20/2020	Time: 11:37:24 AM	Sheet 3 of 4	
File: C:\Users\cdemolde\Documents\GitHub\GT-BITNG\Projects\PNW\Electrical\Sensor_Glove-X01\Sensor_Glove_Power-X0			

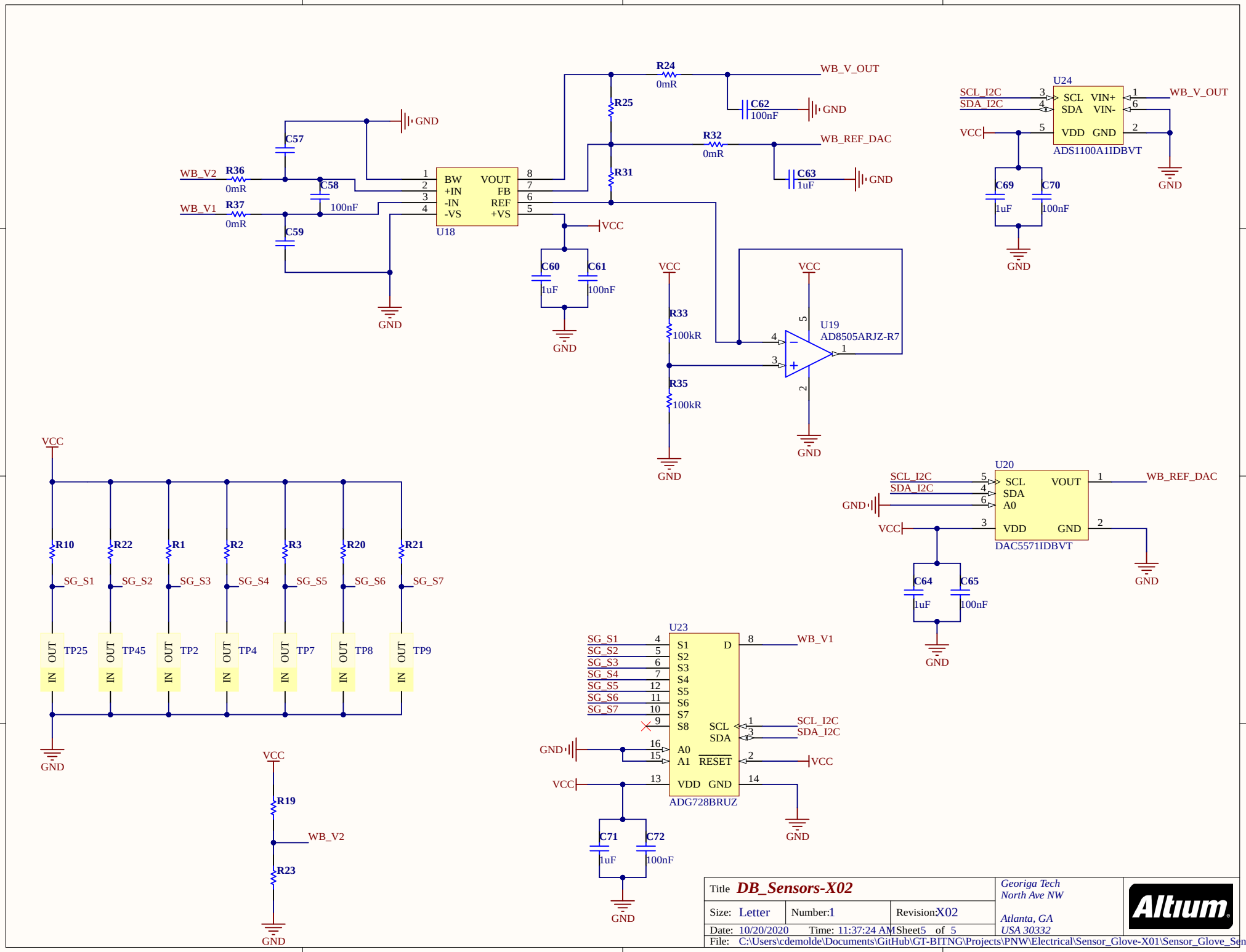

Title	DB_Sensors-X02		Georiga Tech North Ave NW Atlanta, GA USA 30332
Size: Letter	Number: 1	Revision: X02	
Date: 10/20/2020	Time: 11:37:24 AM	Sheet 5 of 5	
File: C:\Users\cdemolde\Documents\GitHub\GT-BITNG\Projects\PNW\Electrical\Sensor_Glove-X01\Sensor_Glove_Sensors-X			