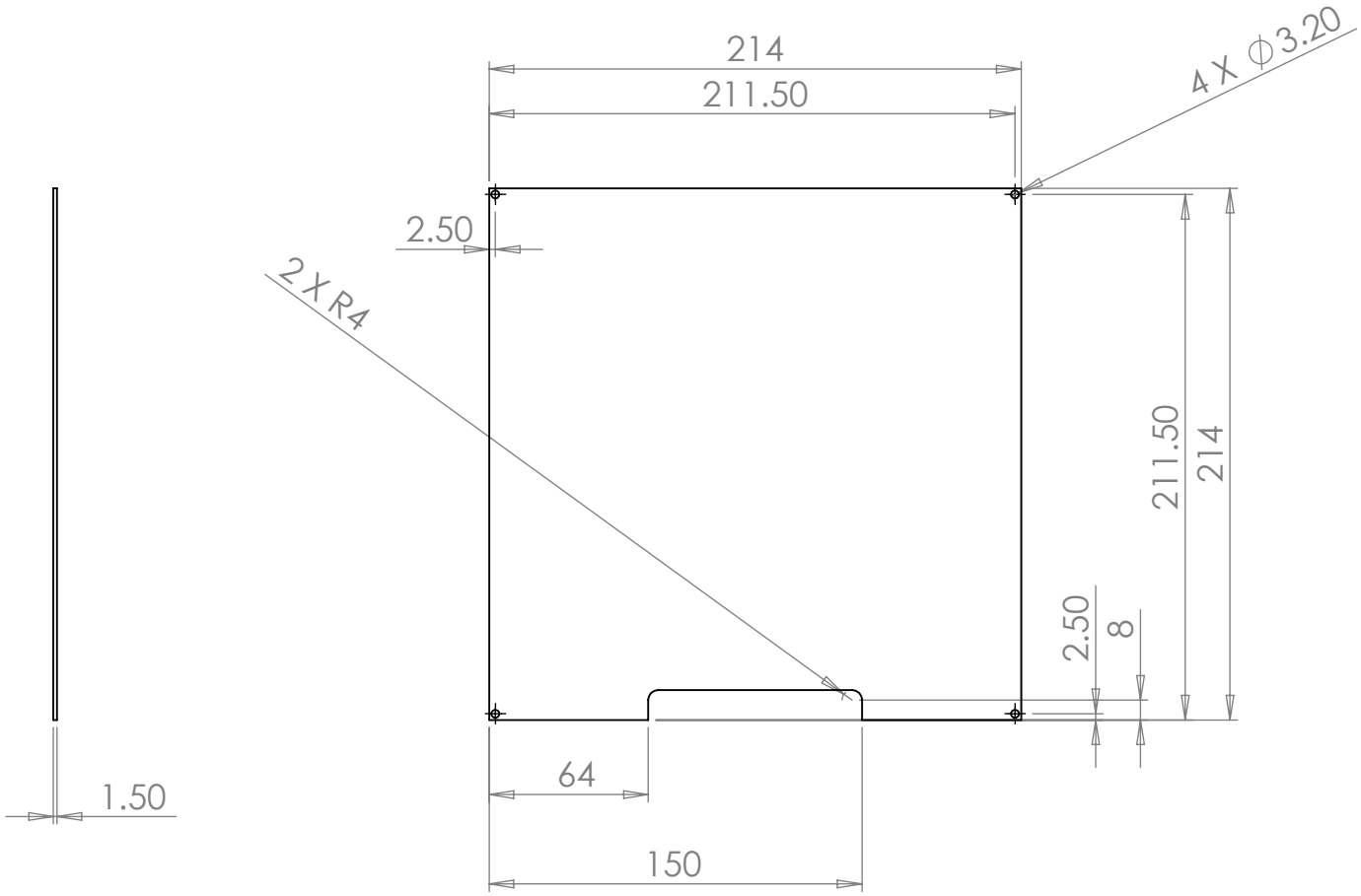

UNLESS OTHERWISE SPECIFIED: DIMENSIONS ARE IN MILLIMETERS SURFACE FINISH: TOLERANCES: LINEAR: ANGULAR:	FINISH:			DEBUR AND BREAK SHARP EDGES	DO NOT SCALE DRAWING	REVISION 2
	NAME	SIGNATURE	DATE		TITLE:	
DRAWN	JMG		Mar '14			
CHK'D						
APPV'D						
MFG						
Q.A				MATERIAL: Aluminium	DWG NO. heat-spreader	A4
				WEIGHT:	SCALE:1:3	SHEET 1 OF 1