Sigfox Access Station Nano

NAP Series (NAP3, NAP5, NAP7)

Ver. 2.1

Remote Solution
the Valuable Convenience

Revision History

Version	Date	Description	Writer
v1.0	07/12/2021	First Release	SH.Kim
V1.2	07/14/2021	Updated LTE specification	Andy Lee
V1.3	07/26/2021	Modified descriptions on NAP introduction	Andy Lee
V1.4	10/15/2021	Updated LTE module spec	SH.Kim
V1.6	07/27/2022	Updated in accordance to the latest test results	KangByungGon /D.lee
V1.7	06/09/2023	Updated Ethernet spec.	SH.Kim
V1.8	06/28/2023	Updated Ethernet spec.	SH.Kim
V1.9	07/12/2023	· Products highlights/ Supports Wi-Fi spec. · Cellular specification / Data Transmission - Misspellings · NAP Specifications – RF / Wi-Fi RF Characteristics (NAP 3 & NAP7) / Operation Channels *	SH.Kim
V2.0	07/12/2023	· Overall update · Combine RC1 and RC3 documents	SH.Kim
V2.1	08/01/2023	RC3 Max Transmit Power (EIRP) updated in NAP Specifications – RF / Sigfox Characteristics	SH.Kim

NAP Specification described in this document is subject to change without notification. RS will inform the change asap possible before it's applied spec

NAP (Nano Access Point)

Sigfox Access Station Nano Gateway

NAP is a gateway equipment that comes in three versions. These are categorized by the capability of internet connection.

NAP3 connects the Sigfox cloud platform to an wired Ethernet cable or through Wi-Fi connection.

NAP5 features a built-in Cellular module which supports LTE Cat M1 as a default capability. (LTE Cat1 is a customized option for user). NAP5 doesn't support a wired network or Wi-Fi. (only LTE support)

NAP7 connects to Sigfox Cloud via an existing LAN infrastructure (Ethernet or Wi-Fi) or cellular network.
It features the ability to automatically switch networks if encountering an issue on the network, as well as checking network backhaul to support seamless data service.

Improve coverage indoors

Easy to install

Cost efficient

Improve Sigfox Device Coverage Indoor

With the multiple backhaul capability, NAP can be installed at customer premises where Ethernet, Wi-Fi and LTE are available. This can be installed for indoor or rural outdoor with IP61 encloser such as attics, underground, warehouses, buildings, shops, farms, offices and etc.

It can be installed in a sigfox radio-shaded area that is out of signal range of existing access stations to further increase coverage.

Easy to Install

With its compact form factor and "zero touch installation" function, Sigfox Access Station Nano can be easily installed within minutes

Our built-in software is based on OpenWRT which is designed for all kinds of network environments, parameter configurations and firewall functions. Configurations and management of gateway devices are easily accessible to users through web configuration management system.

NAP web configuration is possible by automatic pairing with user's smartphone using BLE and NFC built-in NAP.

Outdoor Installation Option

NAP is equipped with IP65 protection level outdoor enclosure and can withstand hot and cold environmental operation.
Furthermore, it can be installed in a pole or a wall and has a Power-over-Ethernet (PoE) supply mode, making it convenient for installation.

ID & Technology

NAP 3/5 and 7 share one ID, but the number of antennas and LEDs vary depending on NAP series (3/5/7). Below ID is for NAP7 which has two external antenna for LTE and sigfox

External Antenna Config:
Two antenna config, includes one for Sigfox, the other for LTE
- 2 antennas for NAP5 and NAP7, 1 antenna for NAP3

LED Indicator Configurations:
- 5 LEDs for NAP3 and NAP5
- 6 LEDs for NAP7

NAP7 MODEL

Rear Interfaces:
- Antenna Input (fixed rotating)
- USB-C Power Input
- Reset switch (recessed)
- Two RJ45 ports to support either a WAN or LAN connection.

Products highlights

- Supports RC1 ~ RC7 and 1 RX / 1 TX
- Supports LTE Cat M1[1)] cellular network(for NAP5 /NAP 7) and GPS (for NAP7 / Option for NAP5)
- Supports Wi-Fi 802.11 b/g/n, 2x2 MIMO (For NAP3/NAP7)
- 100base-T Ethernet with POE (Power-over-Ethernet) and 1xWAN, 1xLAN
- Supports BLE 5.0 and NFC ISO 14443-A
- Can integrate with both private and public (TTN)
- Network Servers (RMS) [2)]
- Supports TLS V1.2 for security (IP/Cloud)
- Supports AES 128, AES 256 and No encryption

1) *LTE M1 is a default specification. LTE Cat1 is an optional spec (customization option on production)*
2) *RMS is a Remote Management System made and run by Remote Solution. It has standard and enhanced option. Standard is free of charge. Enhanced feature is a paid service.*

LED Indicators

NAP has the different number of LEDs along with models NAP3/5 and 7.
They are for Power, Wi-Fi, Ethernet, LTE and Cloud connection.
- Power : Red color
- Wi-Fi, LTE, Ethernet, Cloud : Green color

LEDs	Operation	NAP3	NAP5	NAP7
Power	Indicating Power on or Off • On : Power On successfully • Off : Power Off or No power feeding	✓	✓	✓
Cloud Connection	Indicating Cloud connection status • On : Successfully connected to Cloud • Off : No connection or Connection failure	✓	✓	✓
LTE	Indicating LTE connection status • Flashing - On 200ms, Off 1800ms : Network searching or No USIM - On 1800ms, Off 200ms : Idle - On 125ms, Off 125ms : Data Transmission • Off : No Power		✓	✓
Wi-Fi	Indicating Wi-Fi connection status • Flashing : Data Transmission • On : Wi-Fi enable & Idle • Off : Disabled*	✓		✓
Ethernet	Indicating Ethernet connection status • Flashing : Data Transmission • On : Transmission is in Ready (connection) • Off : No Connection	✓	✓	✓

** User can disable Wi-Fi function by configuration menu*

Add on features

Automotive Cigar Jack and PoE are user purchasing option in the market.

Options	Operation	NAP3	NAP5	NAP7
PoE	• PoE Adaptor & Injector. - Powered by Ethernet cable	✓	✓	✓
Automotive jack	• Cigar Jack option in vehicle - Powered by Automotive Cigar Jack,		✓	✓
GPS	• GPS/GNSS Options. - NAP5 and NAP7 have GNSS function as a default.		✓	✓

NAP Specifications – RF

Sigfox Characteristics		
RF	Standard	Sigfox Ultra Narrow Band Protocol for M2M and IoT
	Max range of operating frequencies *	RC1 Uplink : Lower 868.034 MHz ~ Upper 868.226 MHz RC1 Downlink : Lower 869.429 MHz ~ Upper 869.621 MHz RC3 Uplink : Lower 923.104 MHz ~ Upper 923.296MHz RC3 Downlink : Lower 922.104 MHz ~ Upper 922.296 MHz
	Max Receiver Sensitivity	RC1 : -115dBm±2dB @ 100bps / -99dBm±2dB @ 600bps RC3 : -115dBm±2dB @ 100bps
	Data Rate and Modulation	100 bps D-BPSK (UL), 600 bps GFSK (DL)
	Max Transmit Power(EIRP) *	RC1 : 21 dBm ± 2dB RC3 : 16 dBm ± 1dB
	Capability RX / TX	1 RX / 1 TX
	Spectrum Sharing *	RC1 : DC RC3 : LBT
	Antenna	External Patch Type
Security (IP/Cloud)		HW Crypto Engine, TLS V1.2
Credentials		Mode: AES128, AES256, No encryption
Message Filtering		Whitelist

** The maximum frequency range, power setting and spectrum can vary by country and its regulatory requirement*

Ethernet Characteristics (NAP3/NAP5/NAP7)	
Standard	IEEE 802.3 10/100 Base-T
Network Protocol	TCP/UDP over IPv4 and IPv6 (LTE Only)
OS	OpenWRT (Kernel Ver. 4.4.198)
Firewall *	MAC / IP / Port Filtering, Port Forwarding
IP Configuration	Supports Static, Dynamic, Public, Private IP
Ethernet Port	RJ-45 1 x WAN (Include PoE) 1 x LAN

** Firewall function under development*

Wi-Fi RF Characteristics (NAP 3 & NAP7)	
Standard	IEEE 802.11 b / g / n
Operating Frequency *	2,400MHz ~ 2,483.5MHz (ISM Band)
Operation Channels *	Channel 1-13
Transmit Power (The max. power may be different depending on local regulations)	802.11b : ≥ 18.5dBm(@11Mbps) 802.11g : ≥ 15dBm (@54Mbps) 802.11n : ≥ 15dBm (@HT40, MCS7)
Receiver Sensitivity	802.11b : ≤ -88dBm (@11Mbps) 802.11g : ≤ -75dBm (@54Mbps) 802.11n : ≤ -75dBm (@HT40, MCS7)
TX / RX	2 x 2 MIMO
Antenna	Internal

** The operating frequency range, operating channels can vary by country and its regulatory requirement*

Cellular specification

NAP supports multi LTE capabilities which are LTE M1 and Cat1. LTE M1 is a default specification and LTE Cat1 is an optional as an customization option. Please refer to the below spec in detail

NAP5/NAP7 Cellular Characteristics – LTE M1	
Standard	Cat M1, GSM/EDGE (3GPP Rel-14)
Frequency Bands	LTE-FDD : B1/B2/B3/B4/B5/B8/B12/B13/B18/B19 /B20/B25/B26/B27/B28/B66/B85 GSM/EDGE : B5(850)/B8(900)/B3(1800)/B2(1900)MHz
Data Transmission	Cat M1 (Max) : (DL) 588Kbps, (UL) 1,119Kbps EDGE (Max) : (DL) 296Kbps, (UL) 236.8Kbps GPRS (Max) : (DL) 107Kbps, (UL)85.6Kbps
Max Out Power *	Power class 5 (21 dBm ± 2dB / LTE Bands)
Antenna	External Patch Type
USIM	Micro USIM
Modem Module	Built-in, Size : 23.6 x 19.9 x 2.2 mm MDM9205, Qualcomm
GNSS	GPS, GLONASS, BeiDou, Galileo, QZSS
GPS ANT	Internal Antenna GNSS/GPS is a default feature at NAP7 (It is an optional at NAP5)

** The maximum Out Power varies by country and telecommunication service providers' internal regulations.*

Approval [1)]	**Carrier** : Vodafone (Global) Deutsche Telekom (Europe) Verizon/AT&T/T-Mobile/Sprint (North America) China Telecom/China Mobile/China Unicom (China) SKT (South Korea) NTT DOCOMO/SoftBank/KDDI (Japan) Telstra (Australia) **Regulatory**: GCF (Global) CE (Europe) FCC/PTCRB (North America) IC (Canada) Anatel (Brazil) SRRC/NAL/CCC (China) KC (South Korea) NCC (Taiwan, China) JATE/TELEC (Japan) RCM (Australia/New Zealand) NBTC (Thailand) IMDA (Singapore)

** Under development & Planning*

LTE Cat1 is a customized option. NAP supports EU, Australia, New Zealand, Latin America, North America, Thailand, S.Korea and Japan for LTE cat1. Depending on a region, the frequency bands listed at below table are customized on production.

NAP5/NAP7 Cellular Characteristics – LTE Cat1	
Standard	Cat 1 (3GPP Rel-11)
Frequency Bands [1)]	LTE-FDD : B1/B2/B3/B4/B5/B7/B8/B12/B13/B18/B19/B20/B26/B2BA/B28 WCDMA : B1/B2/B4/B5/B8 GSM/EDGE : B2/B3/B5/B8
Data Transmission [2)]	LTE-FDD (Max) : (DL) 10Mbps, (UL)5M bps, DC-HSPA+(Max) : (DL) 42Mbps, (UL) 5.76Mbps WCDMA (Max) : (DL)384Kbps, (UL)384Kbps EDGE(Max) : (DL) 296 Kbps, (UL) 236.8 Kbps, GPRS(Max): (DL) 107 Kbps, (UL) 85.6Kbps
Max Out Power	Power Class 3 (23dBm ± 2dB/ LTE Bands)
Antenna	External PIFA Type
USIM	Micro USIM
Modem Module	mPCIe : Size : 51 x 30 x 4.9mm Modem Chip : MDM9207-1, Qualcomm
GNSS	GPS, GLONASS, BeiDou, Galileo, QZSS
GPS ANT	Internal Antenna GNSS/GPS is a default feature at NAP7 [3)] (It is an optional at NAP5)
Approval[4)]	**Carrier** Vodafone, Deutsche Telekom, Telefónica, T&T/T-Mobile, U.S. Cellular, Rogers/Telus, Verizon, Telstra, KT/SKT, NTT DOCOMO/KDDI **Regulatory**: GCF(Global) RCM(Australia/New Zealand) FCC/PTCRB(North America) IC(Canada) Anatel(Brazil) NCC(Taiwan/China): JATE/TELEC(Japan) KC(South Korea)

1) Listed all band frequencies supporting at NAP. Actual frequency band can vary depending on a country. It's customization option on production. For example, EU region doesn't support B28 at FDD and B3,B5 at GSM either.

2) Data Transmission vary a little depending a county. It's related with a capability of frequency of bands.

3) Unit price may vary depending on regulatory and band frequencies requirements.
It's under development.

NFC Tag Characteristics (NAP 3, 5 & 7)	
Standard	ISO 14443-A
Input Frequency	13.56MHz
Carrier Modulation Index	Min 95%
Data Transmission	106Kbps

BLE Characteristics (NAP 3, 5 & 7)	
Standard	IEEE 802.15.4 Bluetooth Ver. 5.0
Operating Frequency	2,360MHz ~ 2,500MHz (ISM Band)
Data Transmission	2Mbps, 1Mbps, 500Kbps, 125Kbps
Out Power	-20 ~ 8dBm ± 1dB (Configurable in 4dB steps)
Receiver Sensitivity (0.1%, BER)	1Mbps, BLE Mode (@Packet≤37Byte) ≤ -95dBm
Antenna	Internal

** NFC Tag and BLE are for NAP setting and setting status check*

NAP Specifications – Power/Mechanical/Compliance

Power	
Power Consumption	10W max peak [1)]
Power supply (PoE Option and Support Nano 3, 7)	AC 110~220V, DC 5V/2A USB-C Type adapter Passive PoE with AC 220~110V, DC 24V adaptor

Mechanical and Environmental	
Casing dimensions (W, H, D)	160 mmx 160mm x 38mm
Operating temperatures	-20°C to +60°C
Storage temperatures	-30°C to +85°C
Ingress Protection	IP 31, IP65 (with Outdoor Enclosure)
Installation	Tabletop or Wall mounting
Casing material	Plastic ABS

Compliance[2)]	
Safety	EN 60950-1, IEC 60950-1 ; EN 62368-1, IEC 62368-1
Radio	EN 300 220-2 ; EN 300 220-1 ; FCC part 15.247 ; ARIB STD-T108
EMC	EN 301 489-3 ; EN 301 489-1 FCC Part 15 B ; FCC 15.207 and FCC 15.209

1) Max power consumption would vary depending on NAP models and its regulatory limitation.
2) Regulatory certification extends to other countries along with the market needs and priority

NAP Specifications - S/W

Category	Items	Description
LTE	BG95	LTE cat M1/NB2 LPWA module *(LTE cat1 is available as a customization option)*
	Bands	B1/B2/B3/B4/B5/B8/ B12/B13/B14/B18/B19/ B20/B25/B26/B27/B28/ B66/B85
	IPv6	IPv4/v6 dual stack
	GPS	GPS/GLONASS/BeiDou/ Galileo/QZSS
	Data Rate (Kbps)	588(DL)/1119(UL)
WAN Interface	1x WAN	10/100 Base-T Ethernet port
	IPv4	DHCP Client, Static IP
LAN Interface	1x LAN	10/100 Base-T Ethernet port
	IPv4	DHCP Server
WLAN Interface	802.11 b/g/n	2.4G 2T2R
	AP/STA dual mode *	AP Client mode support
	Auto Channel Selection	RG find best channel condition
Routing and NAT		Supported

NAP Specifications - S/W (2/2)

Category	Items	Description
Security	Firewall	Not yet supported
	Drop Invalid Packet	Check IP version, Header length, bad IP option, check 3way handshake of TCP connection, bad TCP option
	Filtering	MAC/IP/Port
	DoS	SYN flood, Ping flood, ICMP broadcast, IP loose/strict s ource routing
User Interface & Management	Embedded WEB Server	Yes
	Security	Password
	Auto log-out	5 minutes idle timeout
	S/W update	Yes
	Browser independent	Yes (over IE8.0, Chrome, Safari, Firefox)
Sigfox	Radio	RC-1 to 7 Global coverage
	Modulation	DBPSK(UL) / GFSK(DL)
	Cloud Interface	gRPC V1.34, Protobuf V3.13.0
	PKI sub-system	Yes
	Authentication	OAuth 2.0

NAP mechanical Spec details

Antennas may be oriented to facilitate mounting options and to provide optimum signal range.
The NAP Antennas may require a minimum clearance for vertical or horizontal orientation
Minimum height requirements 160mm and Width 366mm

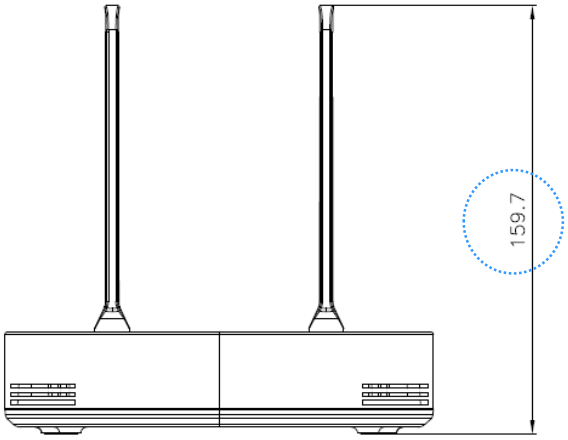

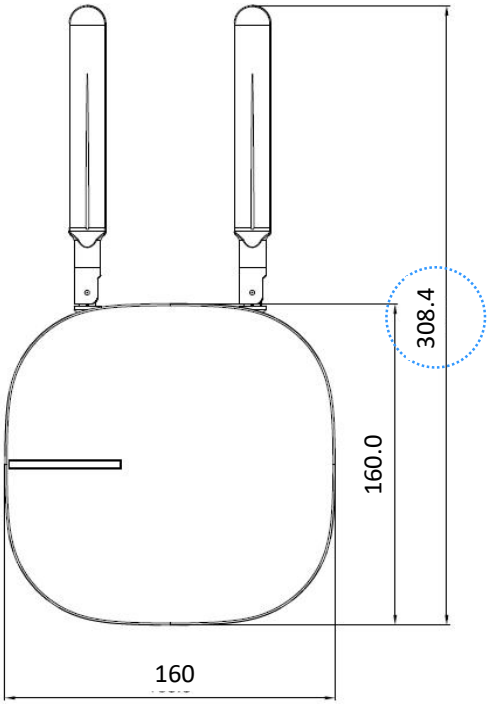

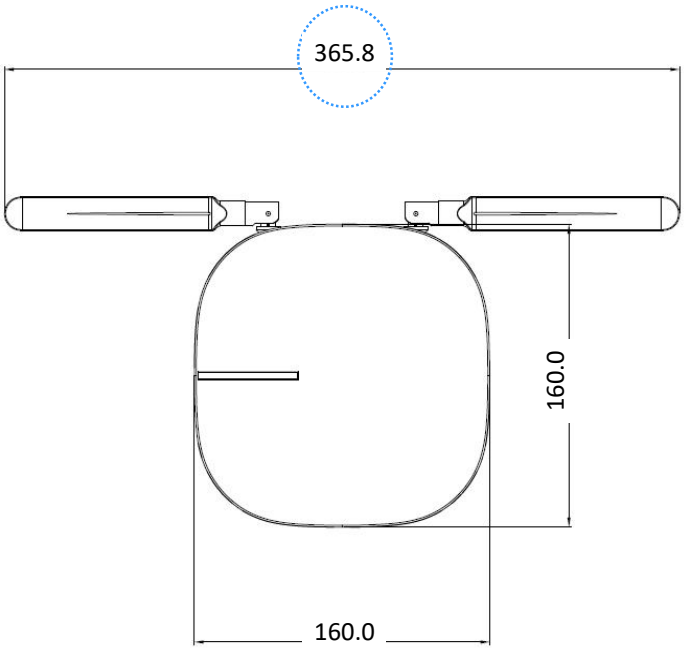

Remote Solution the Valuable Convenience

NAP Dimension with/without the mounting bracket

- Table-On type : 160 x 160 x 38mm
- Wall mounting type : 200 x 160 x 38 mm

2-detachable mounting brackets are supplied

- Screw mount assembly provided to secure brackets to the NAP, and for secure device mounting on to any surface

Wall mounting

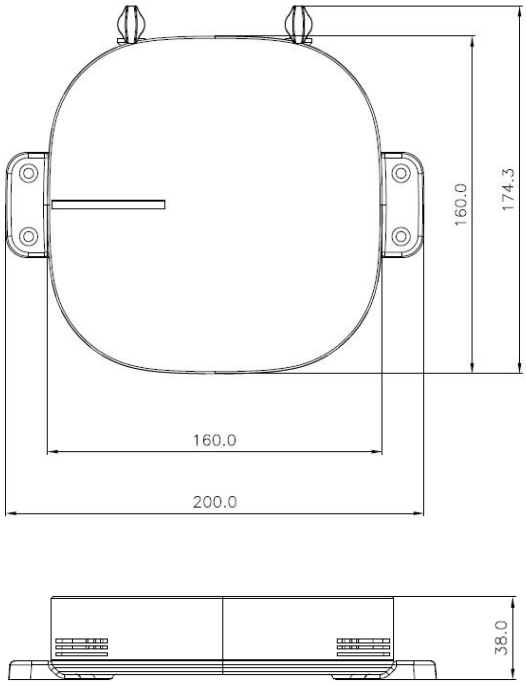

Wall mount type (with bracket)

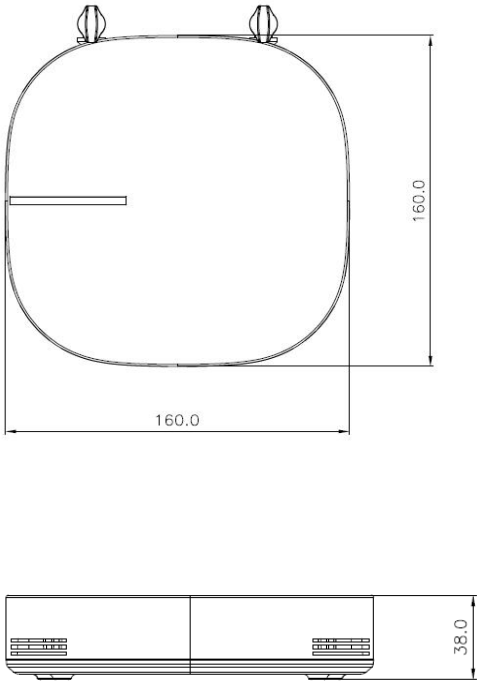

Table Type (No bracket)

Remote Solution the Valuable Convenience