UNIVERSITÀ DEGLI STUDI DI GENOVA

DIBRIS

DEPARTMENT OF COMPUTER SCIENCE AND TECHNOLOGY,
BIOENGINEERING, ROBOTICS AND SYSTEM ENGINEERING

MODELLING AND CONTROL OF MANIPULATORS

Second Assignment

Manipulator Geometry and Direct Kinematics

Author:

Surname Name

Student ID:

s0000000

Professors:

Enrico Simetti
Giorgio Cannata

Tutors:

Andrea Tiranti
Luca Tarasi
George Kurshakov

December 10, 2024

Contents

1 Assignment description **3**
1.1 Exercise 1 3

2 Exercise 1 **5**
2.1 Q1.1 5
2.2 Q1.2 6
2.3 Q1.3 7
2.4 Q1.4 7

3 Appendix **9**
3.1 Appendix A 9
3.2 Appendix B 9

Mathematical expression	Definition	MATLAB expression
$< w >$	World Coordinate Frame	w
${}^{a}_{b}R$	Rotation matrix of frame $< b >$ with respect to frame $< a >$	aRb
${}^{a}_{b}T$	Transformation matrix of frame $< b >$ with respect to frame $< a >$	aTb

Table 1: Nomenclature Table

1 Assignment description

The second assignment of Modelling and Control of Manipulators focuses on manipulators' geometry and direct kinematics.

- Download the .zip file called *template_MATLAB-assignment2* from the Aulaweb page of this course.
- Implement the code to solve the exercises on MATLAB by filling the template classes called *geometricModel* and *kinematicModel*
- Write a report motivating your answers, following the predefined format on this document.

1.1 Exercise 1

Given the following CAD model of an industrial 7 DoF manipulator:

Q1.1 Define all the model matrices, by filling the structures in the *BuildTree()* function. Be careful to define the z-axis coinciding with the joint rotation axis, and such that the positive rotation is the same as showed in the CAD model you received. Draw on the CAD model the reference frames for each link and insert it into the report.

Q1.2 Implement the method of *geometricModel* called *updateDirectGeometry()* which should compute the model matrices as a function of the joint position q. Explain the method used and comment on the results obtained.

Q1.3 Implement the method of *geometricModel* called *getTransformWrtBase()* which should compute the transformation matrix from the base to a given frame. Calculate the following transformation matrices: ${}^{b}_{e}T$, ${}^{5}_{3}T$. Explain the method used and comment on the results obtained.

Q1.4 Implement the method of *kinematicModel* called *updateJacobian()* which should compute the jacobian of a given geometric model considering the possibility of having *rotational* or *prismatic* joints. Compute the Jacobian matrix of the manipulator for the end-effector. Explain the method used and comment on the results obtained.

Remark: The methods should be implemented for a generic serial manipulator. For instance, joint types, and the number of joints should be parameters.

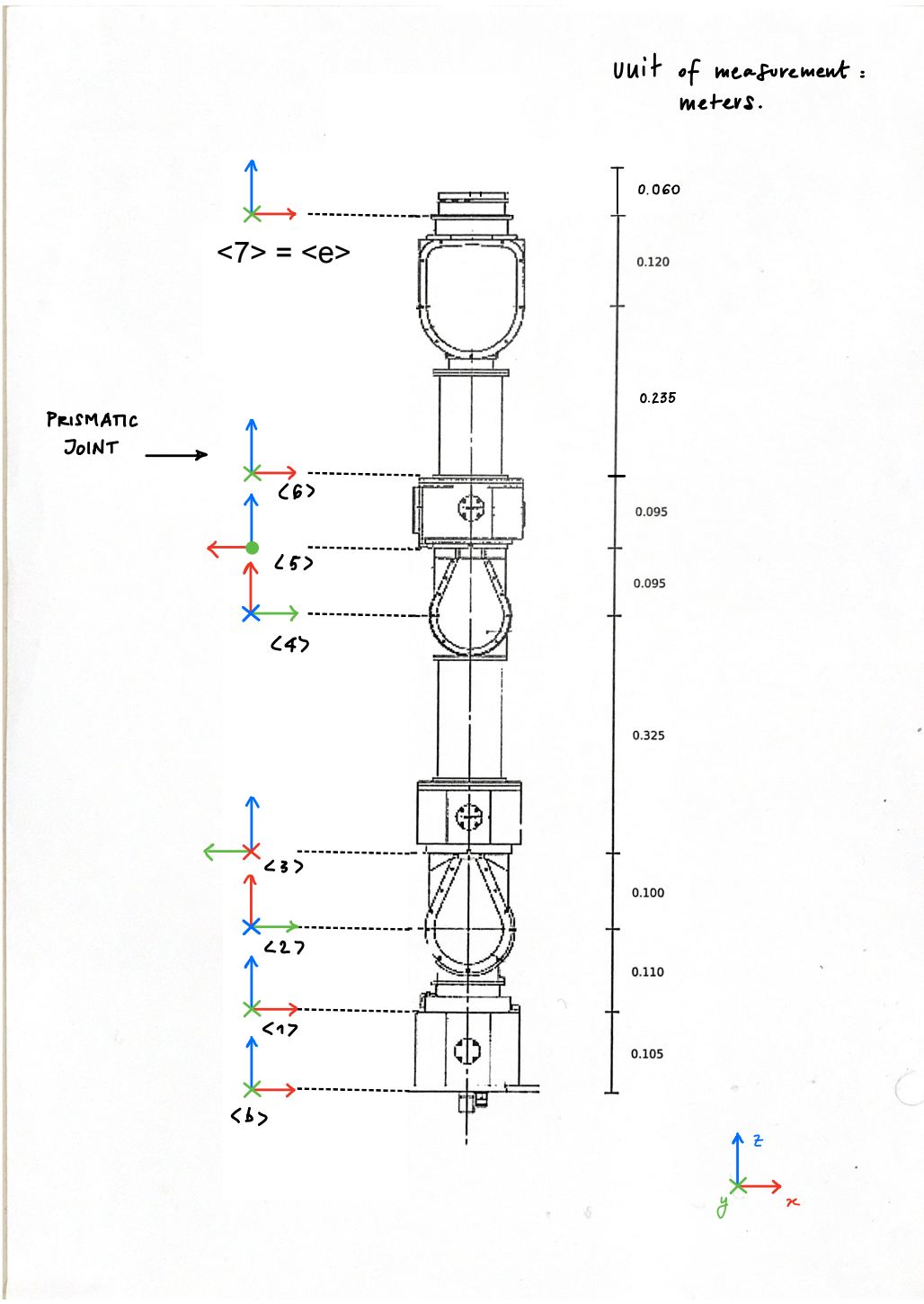

Figure 1: CAD model of the robot

2 Exercise 1

[Comment] For the last exercises include an image of the initial robot image of the final robot configuration

[Comment] For each exercise report the results obtained and provide an explanation of the result obtained (even though it might seem trivial). The matlab code is NOT an explanation of the algorithm.

2.1 Q1.1

Given the ease of representation and comprehension of serial chain pose, it is crucial to compute the transformation matrices for each joint with respect to the preceding one. For instance, the transformation matrices ${}^i_jT_0$ in the initial configuration ($\mathbf{q}_0 = \mathbf{q} = \mathbf{0}_{1\times 7}$) represent the transformation from frame $< i >$ with respect to the next consecutive frame $< j >$. It takes into account both the rotational and translational contributions:

- The rotational contribution is computed with *Yaw-Pitch-Roll* convention for rotation, which defines the sequence of rotations around the z, y, and x axes, respectively;
- The translational contribution is represented by the elements contained in the first three rows of the last column of the transformation matrix.

It's crucial to emphasize that these matrices vary based on the values of the vector $\mathbf{q}$ that contain values for uniquely determining each joint's configuration. Given the general form of the transformation matrix:

$$ {}^i_jT = \begin{pmatrix} {}^i_jR & {}^iP_j \\ \mathbf{0}_{1\times 3} & 1 \end{pmatrix} \tag{1} $$

where j is the considered chain's joint and i is the joint with respect is considered the transformation, ${}^i_jR$ is the rotation matrix that define the rotation from the frame $< i >$ to $< j >$, and ${}^i_jP$ is the position of the frame $< j >$ with respect to frame $< i >$. Taking into account $\mathbf{q} = \mathbf{0}_{1\times 7}$ the transformation matrices for the initial configuration of the chain are:

$$ {}^b_1T_0 = \begin{pmatrix} 1 & 0 & 0 & 0 \\ 0 & 1 & 0 & 0 \\ 0 & 0 & 1 & 0.105 \\ 0 & 0 & 0 & 1 \end{pmatrix} \quad {}^1_2T_0 = \begin{pmatrix} 0 & 1 & 0 & 0 \\ 0 & 0 & 1 & 0 \\ 1 & 0 & 0 & 0.110 \\ 0 & 0 & 0 & 1 \end{pmatrix} \quad {}^2_3T_0 = \begin{pmatrix} 0 & 0 & 1 & 0.100 \\ 0 & -1 & 0 & 0 \\ 1 & 0 & 0 & 0 \\ 0 & 0 & 0 & 1 \end{pmatrix} \quad {}^3_4T_0 = \begin{pmatrix} 0 & 0 & 1 & 0 \\ 0 & -1 & 0 & 0 \\ 1 & 0 & 0 & 0.325 \\ 0 & 0 & 0 & 1 \end{pmatrix} $$

$$ {}^4_5T_0 = \begin{pmatrix} 0 & 0 & 1 & 0.095 \\ -1 & 0 & 0 & 0 \\ 0 & -1 & 0 & 0 \\ 0 & 0 & 0 & 1 \end{pmatrix} \quad {}^5_6T_0 = \begin{pmatrix} -1 & 0 & 0 & 0 \\ 0 & -1 & 0 & 0 \\ 0 & 0 & 1 & 0.095 \\ 0 & 0 & 0 & 1 \end{pmatrix} \quad {}^6_eT_0 = \begin{pmatrix} 1 & 0 & 0 & 0 \\ 0 & 1 & 0 & 0 \\ 0 & 0 & 1 & 0.355 \\ 0 & 0 & 0 & 1 \end{pmatrix} $$

where:

- ${}^b_1T_0$ describes solely a translation along the x axis of $0.105\,m$, then ${}^b_1R_0 = \mathbf{I}_{3\times 3}$ and ${}^bP_1 = (0,\, 0,\, 0.105)^T$;
- ${}^1_2T_0$ represents two $\frac{\pi}{2}$ rotations, one around z and one other around y, both clockwise. There is also a translation component along the z axis of $0.110\,m$, then ${}^1_2R_0 = R_z(-\frac{\pi}{2}) \cdot R_y(-\frac{\pi}{2})$ and ${}^1P_2 = (0,\, 0,\, 0.110)^T$;
- ${}^2_3T_0$, as ${}^1_2T_0$, has two clockwise rotations around z of π and y of $\frac{\pi}{2}$ and a translation along x of $0.100\,m$. Formally it means ${}^2_3R_0 = R_z(-\pi) \cdot R_y(-\frac{\pi}{2})$ and ${}^2P_3 = (0.100,\, 0,\, 0)^T$;
- ${}^3_4T_0$ describes an counterclockwise rotations around z of π and a clockwise rotation$y$ of $\frac{\pi}{2}$ and a translation along z of $0.325\,m$. Formally it means ${}^3_4R_0 = R_z(\pi) \cdot R_y(-\frac{\pi}{2})$ and ${}^3P_4 = (0,\, 0,\, 0.325)^T$;
- ${}^4_5T_0$ represents two clockwise rotations around z and x of $\frac{\pi}{2}$ and a translation along x of $0.325\,m$. Formally it means ${}^4_5R_0 = R_z(-\frac{\pi}{2}) \cdot R_y(-\frac{\pi}{2})$ and ${}^4P_5 = (0.095,\, 0,\, 0)^T$;
- ${}^5_6T_0$ express a counterclockwise rotation around z of π and a translation along z of $0.095\,m$. Then ${}^5_6R_0 = R_z(\pi)$ and ${}^5P_6 = (0,\, 0,\, 0.095)^T$;
- ${}^6_eT_0$ highlight the presence of a translation along z of $0.335\,m$. Then ${}^6_eR_0 = \mathbf{I}_{3\times 3}$ and ${}^6P_e = (0,\, 0,\, 0.335)^T$.

2.2 Q1.2

When the chain's pose changes a good method to update the initial configuration is through the transformation matrix:

$$ {}^{i}_{j}T = {}^{i}_{j}T_0 \cdot T_{\text{joint},\, j} \tag{2} $$

where ${}^{i}_{j}T$ is defined as the transformation matrix for the new pose, and $T_{\text{joint},\, j}$ is the transformation matrix that accounts for the joint's change of configuration:

$$ T_{\text{joint},\, j} = \begin{pmatrix} R_z(q_j) & P_j(q_j) \\ \mathbf{0_{1x3}} & 1 \end{pmatrix} \tag{3} $$

The joint j, since the z axis is defined coinciding with the joint's rotation axis, can either rotates $R_z(q_j)$ or translates $P_z(q_j)$ along z on whether it is:

- A rotational joint: Only the rotational part of the transformation matrix contribute to the new configuration. The rotation is along along the z-axis and the new $T_{\text{joint},\, j}$ is:

$$ T_{\text{joint},\, j} = \begin{pmatrix} \cos(q_j) & -\sin(q_j) & 0 & 0 \\ \sin(q_j) & \cos(q_j) & 0 & 0 \\ 0 & 0 & 1 & 0 \\ 0 & 0 & 0 & 1 \end{pmatrix} $$

- A translational joint: In this case, there is only a translation along the z-axis, then $T_{\text{joint},\, j}$ becomes:

$$ T_{\text{joint},\, j} = \begin{pmatrix} 1 & 0 & 0 & 0 \\ 0 & 1 & 0 & 0 \\ 0 & 0 & 1 & q_j \\ 0 & 0 & 0 & 1 \end{pmatrix} $$

For instance, given the vector $\mathbf{q} = (\frac{\pi}{4},\, -\frac{\pi}{4},\, 0,\, -\frac{\pi}{4},\, 0,\, 0.150,\, \frac{\pi}{4})$, the updated transformation matrices ${}^{i}_{j}T$ are:

$$ {}^{b}_{1}T = \begin{pmatrix} 0.7071 & -0.7071 & 0 & 0 \\ 0.7071 & 0.7071 & 0 & 0 \\ 0 & 0 & 1 & 0.1050 \\ 0 & 0 & 0 & 1 \end{pmatrix} \quad {}^{1}_{2}T = \begin{pmatrix} -0.7071 & 0.7071 & 0 & 0 \\ 0 & 0 & 1 & 0 \\ 0.7071 & 0.7071 & 0 & 0.1100 \\ 0 & 0 & 0 & 1 \end{pmatrix} \quad {}^{2}_{3}T = \begin{pmatrix} 0 & 0 & 1 & 0.1000 \\ 0 & -1 & 0 & 0 \\ 1 & 0 & 0 & 0 \\ 0 & 0 & 0 & 1 \end{pmatrix} $$

$$ {}^{3}_{4}T = \begin{pmatrix} 0 & 0 & 1 & 0 \\ 0.7071 & -0.7071 & 0 & 0 \\ 0.7071 & 0.7071 & 0 & 0.3250 \\ 0 & 0 & 0 & 1 \end{pmatrix} \quad {}^{4}_{5}T = \begin{pmatrix} 0 & 0 & 1 & 0.0950 \\ -1 & 0 & 0 & 0 \\ 0 & -1 & 0 & 0 \\ 0 & 0 & 0 & 1 \end{pmatrix} \quad {}^{5}_{6}T = \begin{pmatrix} -1 & 0 & 0 & 0 \\ 0 & -1 & 0 & 0 \\ 0 & -0 & 1 & 0.2450 \\ 0 & 0 & 0 & 1 \end{pmatrix} $$

$$ {}^{6}_{e}T = \begin{pmatrix} 0.7071 & -0.7071 & 0 & 0 \\ 0.7071 & 0.7071 & 0 & 0 \\ 0 & 0 & 1 & 0.3550 \\ 0 & 0 & 0 & 1 \end{pmatrix} $$

- ${}^{b}_{1}T$, where $q_1 = \frac{\pi}{4}$, represent only a counterclockwise rotation around the z-axis with respect to initial configuration. The result can be verified by comparing the new matrix ${}^{1}_{b}T$ with ${}^{b}_{1}T_0$ in Subsection 2.1. It is evident that there is a variation of the $R_z(q_1)$ component, while $P_z(q_1)$ remains unchanged;
- ${}^{1}_{2}T$, as in the previous case, has $R_z(q_2)$ contribute to the new configuration, while the translational part remains unchanged;
- ${}^{2}_{3}T$, since q_3 is zero, the configuration remains unchanged. It is evident that ${}^{2}_{3}T = {}^{2}_{3}T_0$;
- ${}^{3}_{4}T$ reflects that $q_4 = -\frac{\pi}{4}$. Indeed, there is only a rotational contribution along the z-axis and no translation;
- ${}^{4}_{5}T$ similar to ${}^{2}_{3}T$, is due to q_5 equals zero. Consequently, no rotations or variations take place. The resulting matrix is equivalent to the initial matrix, ${}^{4}_{5}T_0$;
- ${}^{5}_{6}T$ exhibits a translational contribution, on account of $q_6 = 0.15$. The rotational component of the matrix remains unchanged from the initial configuration. However, $P_z(q_6)$ is modified due to the translation along the z-axis.
- ${}^{6}_{7}T$ shows, coherently with $q_7 = \frac{\pi}{4}$, a rotation around the z-axis. This means that the translational part, $P_z(q_7)$, remains unchanged. As result, the new transformation matrix ${}^{6}_{7}T$ will differ from the initial configuration matrix ${}^{6}_{7}T_0$ only in its rotational component.

2.3 Q1.3

The computation of the transformation matrices from the base frame $< b >$ to a given frame $< i >$ is directly governed by the following property:

$$ {}^{b}_{e}T = \prod_{j=1}^{e} {}^{i}_{j}T \Big|_{i=j-1} \tag{4} $$

where generally the base frame $< b >$ has the value $i = 0$. For instance, it is possible to compute ${}^{b}_{e}T$ for the new transformation matrices:

$$ {}^{b}_{e}T = \begin{pmatrix} -0.5000 & -0.5000 & -0.7071 & -0.7039 \\ 0.5000 & 0.5000 & -0.7071 & -0.7039 \\ 0.7071 & -0.7071 & 0 & 0.5155 \\ 0 & 0 & 0 & 1 \end{pmatrix} $$

or, applying the property ${}^{i}_{j}T = {}^{k}_{i}T^{-1} \cdot {}^{k}_{j}T$ it is possible to compute

$$ {}^{5}_{3}T = \begin{pmatrix} 0 & 0.7071 & -0.7071 & 0.2298 \\ -1 & 0 & 0 & 0 \\ 0 & 0.7071 & 0.7071 & -0.3248 \\ 0 & 0 & 0 & 1 \end{pmatrix} $$

2.4 Q1.4

The Jacobian matrix of the manipulator's end-effector, which derives from a specified geometric model, comprises two distinct components: an angular contribution matrix ${}^{b}J^{A}_{e}$ and a linear contribution matrix ${}^{b}J^{L}_{e/b}$. It is defined as:

$$ {}^{b}J_{e/b} = \begin{pmatrix} {}^{b}J^{A}_{e} \\ {}^{b}J^{L}_{e/b} \end{pmatrix} \tag{5} $$

These contributions are computed based on the type of joint considered (i.e., prismatic or rotational), using the following relationships:

$$ {}^{b}J^{A}_{e} = \begin{cases} {}^{b}k_z & \text{for rotational joint} \\ \mathbf{0} & \text{for prismatic joint} \end{cases} \quad {}^{b}J^{L}_{e/b} = \begin{cases} {}^{b}(k_z \times r_{e/b}) & \text{for rotational joint} \\ {}^{b}k_z & \text{for prismatic joint} \end{cases} \tag{6} $$

where $\mathbf{k_z}$ is the unit vector along the joint axis (i.e., the z-axis, as the z axis coincides with the joint's rotation axis), and $r_{e/b}$ is the position vector from the base to the end-effector. Notice that ${}^{b}r_{e/b} = {}^{b}_{j}T \cdot (0,\, 0,\, 0,\, 1)^T$, then the Jacobian for the manipulator's end-effector given $\mathbf{q} = (\frac{\pi}{4},\, -\frac{\pi}{4},\, 0,\, -\frac{\pi}{4},\, 0,\, 0.150,\, \frac{\pi}{4})$ is:

$$ {}^{b}J_{e/b} = \begin{pmatrix} 0 & 0 & 0 & 0 & 0 & 0 & 0 \\ 0 & 0 & 0 & 0 & 0 & 0 & 0 \\ 1 & 1 & 1 & 1 & 1 & 0 & 1 \\ 0 & 0 & 0.0500 & 0.2125 & 0.2797 & 0 & 0.7039 \\ 0 & 0 & -0.0500 & -0.2125 & -0.2797 & 0 & -0.7039 \\ 0 & 0 & 0 & 0 & 0 & 1 & 0 \end{pmatrix} $$

As evidence of the validity of the methods described thus far, a movement simulation is provided, see Figure 2. The serial chain movement commences with configuration $\mathbf{q}_i = (\frac{\pi}{4},\, -\frac{\pi}{4},\, 0,\, -\frac{\pi}{4},\, 0,\, 0.150,\, \frac{\pi}{4})$ and terminates with configuration $\mathbf{q}_f = (\frac{\pi}{4} + \frac{\pi}{6},\, -\frac{\pi}{4},\, 0,\, -\frac{\pi}{4},\, 0,\, 0.150,\, \frac{\pi}{4})$, as depicted in Figure 4. This means that the first joint rotate counterclockwise around z-axis of $\frac{\pi}{6}$ with respect to $q_{i,\,1}$ as shown in Figure 3.

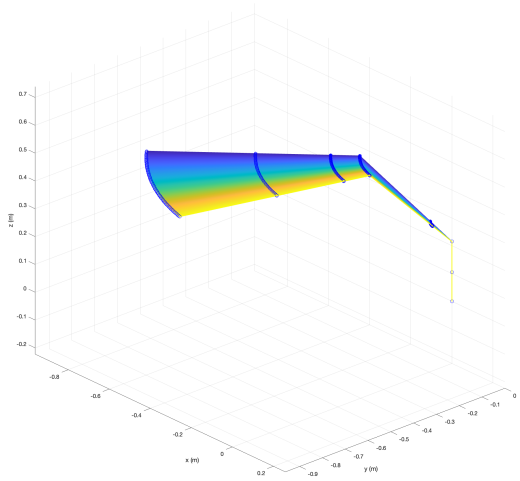

Figure 2: Description of the manipulator's simulation motion in a three-dimensional graph. The horizontal axes, denoted by x and y, represent the horizontal motion, while the vertical axis, denoted by z, represents the vertical motion. The measurement units for all three axes are meters.

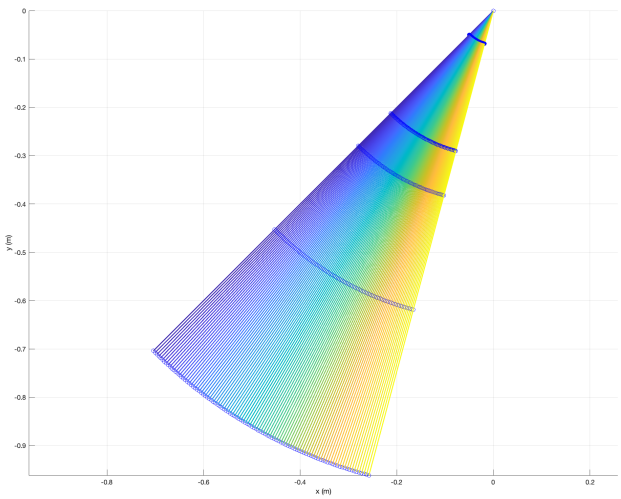

Figure 3: Representation of the manipulator's simulated motion on the Cartesian plane (x, y). The measurement units for the three axes are meters.

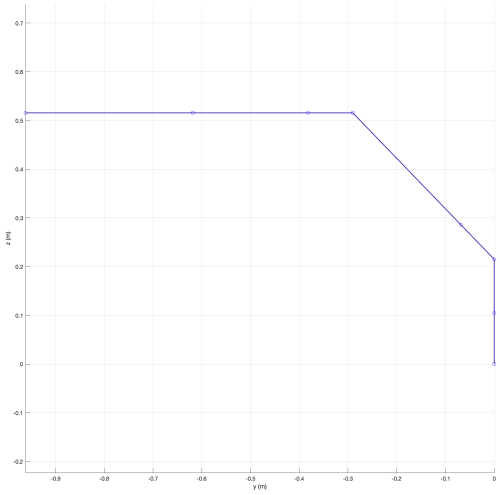

Figure 4: Final configuration of the robot during simulated motion on the Cartesian plane (y, z). The measurement units for the three axes are meters.

3 Appendix

[Comment] Add here additional material (if needed)

3.1 Appendix A

3.2 Appendix B