UNIVERSITÀ DEGLI STUDI DI GENOVA

DIBRIS

DEPARTMENT OF COMPUTER SCIENCE AND TECHNOLOGY,
BIOENGINEERING, ROBOTICS AND SYSTEM ENGINEERING

MODELLING AND CONTROL OF MANIPULATORS

Second Assignment

Manipulator Geometry and Direct Kinematics

Author:

Balia Gian Marco
Salterini Filippo
Polese Carolina

Student ID:

s4398275
s4516129
s4862903

Professors:

Enrico Simetti
Giorgio Cannata

Tutors:

Andrea Tiranti
Luca Tarasi
George Kurshakov

December 8, 2024

Contents

1 Assignment description **3**
1.1 Exercise 1 3

2 Exercise 1 **5**

3 Appendix **9**
3.1 Appendix A 9
3.2 Appendix B 9

Mathematical expression	Definition	MATLAB expression
$< w >$	World Coordinate Frame	w
${}^{a}_{b}R$	Rotation matrix of frame $< b >$ with respect to frame $< a >$	aRb
${}^{a}_{b}T$	Transformation matrix of frame $< b >$ with respect to frame $< a >$	aTb

Table 1: Nomenclature Table

1 Assignment description

The second assignment of Modelling and Control of Manipulators focuses on manipulators' geometry and direct kinematics.

- Download the .zip file called *template_MATLAB-assignment2* from the Aulaweb page of this course.
- Implement the code to solve the exercises on MATLAB by filling the template classes called *geometricModel* and *kinematicModel*
- Write a report motivating your answers, following the predefined format on this document.

1.1 Exercise 1

Given the following CAD model of an industrial 7 DoF manipulator:

Q1.1 Define all the model matrices, by filling the structures in the *BuildTree()* function. Be careful to define the z-axis coinciding with the joint rotation axis, and such that the positive rotation is the same as showed in the CAD model you received. Draw on the CAD model the reference frames for each link and insert it into the report.

Q1.2 Implement the method of *geometricModel* called *updateDirectGeometry()* which should compute the model matrices as a function of the joint position q. Explain the method used and comment on the results obtained.

Q1.3 Implement the method of *geometricModel* called *getTransformWrtBase()* which should compute the transformation matrix from the base to a given frame. Calculate the following transformation matrices: ${}^{b}_{e}T$, ${}^{5}_{3}T$. Explain the method used and comment on the results obtained.

Q1.4 Implement the method of *kinematicModel* called *updateJacobian()* which should compute the jacobian of a given geometric model considering the possibility of having *rotational* or *prismatic* joints. Compute the Jacobian matrix of the manipulator for the end-effector. Explain the method used and comment on the results obtained.

Remark: The methods should be implemented for a generic serial manipulator. For instance, joint types, and the number of joints should be parameters.

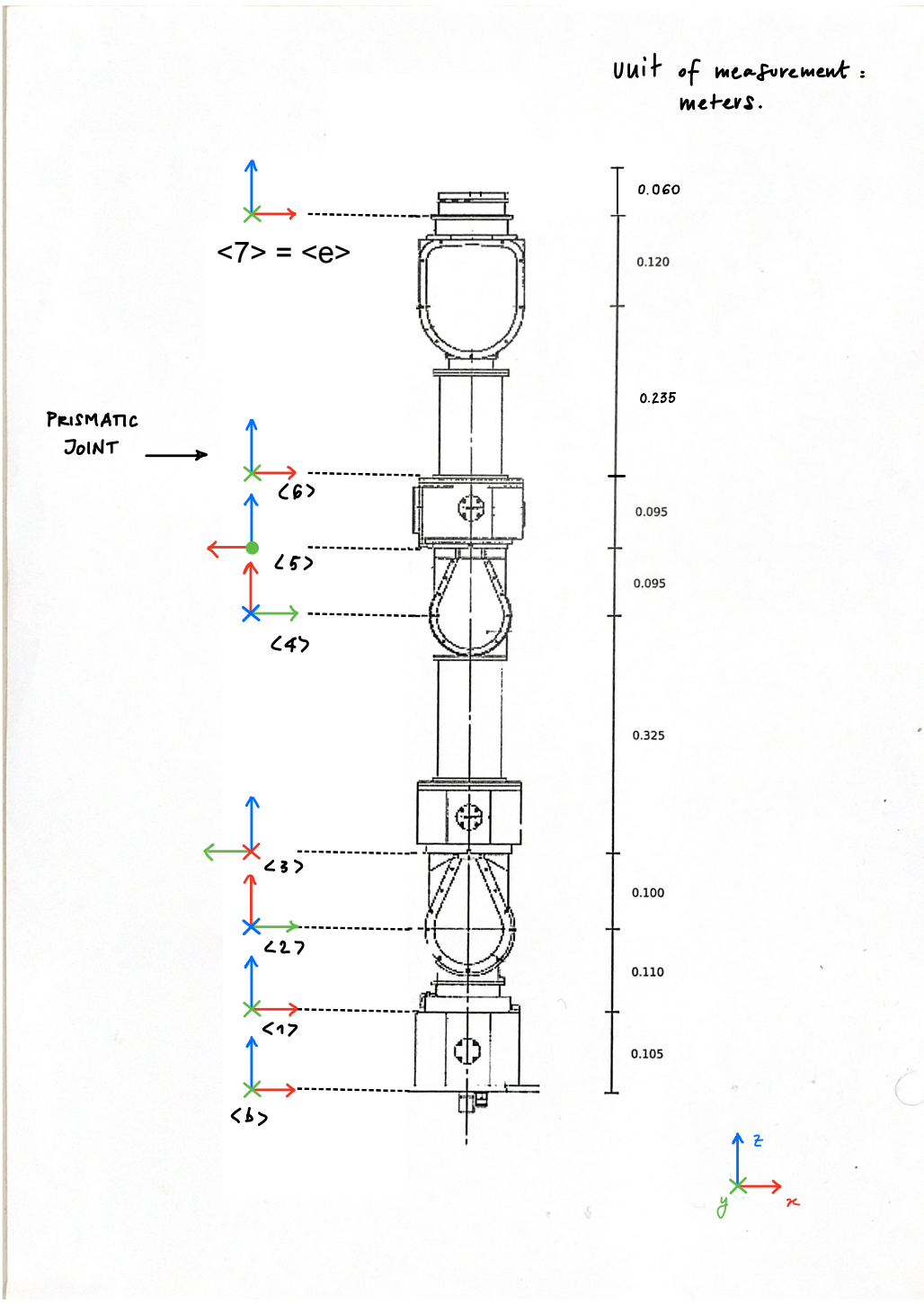

Figure 1: CAD model of the robot

2 Exercise 1

[Comment] For the last exercises include an image of the initial robot image of the final robot configuration

[Comment] For each exercise report the results obtained and provide an explanation of the result obtained (even though it might seem trivial). The matlab code is NOT an explanation of the algorithm.

Q1.1

The calculation of each transformation matrix ${}^{\mathbf{i}}_{\mathbf{j}}\mathbf{T_0}$, which represents the transformation from frame $< i >$ to the next frame $< j >$ in the initial configuration ($\mathbf{q} = 0$), takes into account both the rotational and translational contributions.

- **Rotational Contribution**: The rotational part is computed with Yaw-Pitch-Roll convention for rotation, which defines the sequence of rotations around the z, y, and x axes, respectively.
- **Translational Contribution**: The translational part is represented by the elements contained in the first three rows of the fourth column of the transformation matrix.

Given the general form of the trasformation matrix:

$$ {}^{i}_{j}T_0 = \begin{pmatrix} {}^{i}_{j}R_0 & {}^{i}_{j}P_0 \\ 0_{3x3} & 1 \end{pmatrix} $$

where j is the current frame of the chain and i is the joint that connect the rigid body where is the j-th joint to the base's reference frame. Instead, ${}^{i}_{j}R_0$ is the rotation matrix that define the rotation from the frame $< i >$ to $< j >$ and the point ${}^{i}_{j}P_0$ indicate the position of the frame $< j >$ with respect to frame $< i >$. All those rappresentations are at the istant $\mathbf{q} = 0$. Below the results of calculated transformations with detailed explanations:

$$ {}^{b}_{1}T_0 = \begin{pmatrix} 1 & 0 & 0 & 0 \\ 0 & 1 & 0 & 0 \\ 0 & 0 & 1 & 0.105 \\ 0 & 0 & 0 & 1 \end{pmatrix} \quad {}^{1}_{2}T_0 = \begin{pmatrix} 0 & 1 & 0 & 0 \\ 0 & 0 & 1 & 0 \\ 1 & 0 & 0 & 0.110 \\ 0 & 0 & 0 & 1 \end{pmatrix} \quad {}^{2}_{3}T_0 = \begin{pmatrix} 0 & 0 & 1 & 0.100 \\ 0 & -1 & 0 & 0 \\ 1 & 0 & 0 & 0 \\ 0 & 0 & 0 & 1 \end{pmatrix} \quad {}^{3}_{4}T_0 = \begin{pmatrix} 0 & 0 & 1 & 0 \\ 0 & -1 & 0 & 0 \\ 1 & 0 & 0 & 0.325 \\ 0 & 0 & 0 & 1 \end{pmatrix} $$

$$ {}^{4}_{5}T_0 = \begin{pmatrix} 0 & 0 & 1 & 0.095 \\ -1 & 0 & 0 & 0 \\ 0 & -1 & 0 & 0 \\ 0 & 0 & 0 & 1 \end{pmatrix} \quad {}^{5}_{6}T_0 = \begin{pmatrix} -1 & 0 & 0 & 0 \\ 0 & -1 & 0 & 0 \\ 0 & 0 & 1 & 0.095 \\ 0 & 0 & 0 & 1 \end{pmatrix} \quad {}^{6}_{7}T_0 = \begin{pmatrix} 1 & 0 & 0 & 0 \\ 0 & 1 & 0 & 0 \\ 0 & 0 & 1 & 0.355 \\ 0 & 0 & 0 & 1 \end{pmatrix} $$

- ${}^{\mathbf{b}}_{\mathbf{1}}\mathbf{T_0}$: The first configuration has not rotational contribution. The only contribution is given by traslation along z-axis with a values of 0.105 metres.

$$ {}^{b}_{1}R = I_{3x3}, \quad {}^{b}_{1}P = \begin{pmatrix} 0 \\ 0 \\ 0.105 \end{pmatrix} $$

- ${}^{\mathbf{1}}_{\mathbf{2}}\mathbf{T_0}$: In this case, the rotation matrix ${}^{\mathbf{1}}_{\mathbf{2}}\mathbf{R}$ is composed of two contributions: a first rotation around the z-axis by $-90°$ and a second rotation around the y-axis by $-90°$. The translational contribution, on the other hand, is along the z-axis with a value of 0.110 metres.

$$ {}^{1}_{2}R = R_z(-90°)R_y(-90°), \quad {}^{1}_{2}P = \begin{pmatrix} 0 \\ 0 \\ 0.110 \end{pmatrix} $$

- ${}^{\mathbf{2}}_{\mathbf{3}}\mathbf{T_0}$: Similar to the previous case, the total rotation matrix is composed of a first contribution around the z-axis (in this configuration equal to $-180°$) and a second contribution around the y-axis by $-90°$. However, the translational contributio acts along the x-axis with a value of 0.100 metres.

$$ {}^{2}_{3}R = R_z(-180°)R_y(-90°), \quad {}^{2}_{3}P = \begin{pmatrix} 0.100 \\ 0 \\ 0 \end{pmatrix} $$

- $\mathbf{^3_4T_0}$: The fourth case is characterized by one rotation around the z-axis by $180°$ and a second rotation around the y-axis by $-90°$. The translational contribution is along the z-axis with a value of 0.325 metres.

$$^3_4R = R_z(180°)R_y(-90°), \quad ^3_4P = \begin{pmatrix} 0 \\ 0 \\ 0.325 \end{pmatrix}$$

- $\mathbf{^4_5T_0}$: In this configuration, there are two different rotations, both of $-90°$: the first around the z-axis and the second one around the x-axis. Additionally, there is a translation of 0.095 metres along the x-axis.

$$^4_5R = R_z(-90°)R_x(-90°), \quad ^4_5P = \begin{pmatrix} 0.095 \\ 0 \\ 0 \end{pmatrix}$$

- $\mathbf{^5_6T_0}$: In this case, the rotation matrix consists of a single rotation around the z-axis with a value of $180°$. The translation is along the z-axis with a value of 0.095 metres.

$$^5_6R = R_z(180°), \quad ^5_6P = \begin{pmatrix} 0 \\ 0 \\ 0.095 \end{pmatrix}$$

- $\mathbf{^6_7T_0}$: In the last case, there is no rotational contribution. The translation is along the z-axis with a value of 0.335 metres.

$$^6_7R = I_{3x3}, \quad ^6_7P = \begin{pmatrix} 0 \\ 0 \\ 0.355 \end{pmatrix}$$

Q1.2

For this exercise, we consider two distinct configurations for each pair of generic frames $< i >$ and $< j >$ as defined before:

- Configuration q_{t-1}: In this configuration, the transformation matrix of frame $< j >$ with respect to frame $< i >$ is expressed as:

$$^i_jT(q_{t-1}) = \begin{pmatrix} ^i_jR(q_{t-1}) & ^i_jP(q_{t-1}) \\ 0_{3x3} & 1 \end{pmatrix}$$

- Configuration q_t: both frames independently undergo rotations and traslations. Frame $< j >$ could either rotates according to $R_j(q_t)$ and traslates by $t_j(q_t)$, then the updated transformation matrix $^i_jT(q_t)$ between $< i >$ and $< j >$ in configuration q_t is given by:

$$^i_jT(q_t) = \quad ^i_jT(q_{t-1}) \cdot T_{joint}(q_t) \tag{1}$$

  where the update of

$$T_{joint}(q_t) = \begin{pmatrix} R_z(q_t) & P_z(q_t) \\ 0_{3x3} & 1 \end{pmatrix}$$

  depends on the type of joint being considered:

  - Rotational Joint: then only the rotational part of the transformation matrix contribute to the new configuration. The rotation is along along the z-axis and the new $T_{joint}(q_t)$ is:

$$T_{joint}(q_t) = \begin{pmatrix} \cos(q) & -\sin(q) & 0 & 0 \\ \sin(q) & \cos(q) & 0 & 0 \\ 0 & 0 & 1 & 0 \\ 0 & 0 & 0 & 1 \end{pmatrix}$$

  - Traslational Joint: in this case, there is only a translation along the z-axis, then $T_{joint}(q_t)$ becomes:

$$T_{joint}(q_t) = \begin{pmatrix} 1 & 0 & 0 & 0 \\ 0 & 1 & 0 & 0 \\ 0 & 0 & 1 & q \\ 0 & 0 & 0 & 1 \end{pmatrix}$$

As shown in the Equation (1), the computation of ${}^{i}_{j}T(q_t)$ is based on updating the configuration q_{t-1} by incorporating the incremental transformation from q_{t-1} to q_t. In particular, this approach enables the iterative calculation of transformation matrices for any pair of generic frames where ${}^{i}_{j}T(q_{t-1})$ represents the initial transformation, and $T_{joint}(q_t)$ takes into account changes in configuration.

$$ {}^{b}_{1}T(q_t) = \begin{pmatrix} 0.7071 & -0.7071 & 0 & 0 \\ 0.7071 & 0.7071 & 0 & 0 \\ 0 & 0 & 1.0000 & 0.1050 \\ 0 & 0 & 0 & 1.0000 \end{pmatrix} \quad {}^{1}_{2}T(q_t) = \begin{pmatrix} -0.7071 & 0.7071 & 0 & 0 \\ 0 & 0 & 1.0000 & 0 \\ 0.7071 & 0.7071 & 0 & 0.1100 \\ 0 & 0 & 0 & 1.0000 \end{pmatrix} $$

$$ {}^{2}_{3}T(q_t) = \begin{pmatrix} 0 & 0 & 1.0000 & 0.1000 \\ 0 & -1.0000 & 0 & 0 \\ 1.0000 & 0 & 0 & 0 \\ 0 & 0 & 0 & 1.0000 \end{pmatrix} \quad {}^{3}_{4}T(q_t) = \begin{pmatrix} 0 & 0 & 1.0000 & 0 \\ 0.7071 & -0.7071 & 0 & 0 \\ 0.7071 & 0.7071 & 0 & 0.3250 \\ 0 & 0 & 0 & 1.0000 \end{pmatrix} $$

$$ {}^{4}_{5}T(q_t) = \begin{pmatrix} 0 & 0 & 1.0000 & 0.0950 \\ -1.0000 & 0 & 0 & 0 \\ 0 & -1.0000 & 0 & 0 \\ 0 & 0 & 0 & 1.0000 \end{pmatrix} \quad {}^{5}_{6}T(q_t) = \begin{pmatrix} -1.0000 & 0 & 0 & 0 \\ 0 & -1.0000 & 0 & 0 \\ 0 & -0 & 1.0000 & 0.2450 \\ 0 & 0 & 0 & 1.0000 \end{pmatrix} $$

$$ {}^{6}_{7}T(q_t) = \begin{pmatrix} 0.7071 & -0.7071 & 0 & 0 \\ 0.7071 & 0.7071 & 0 & 0 \\ 0 & 0 & 1.0000 & 0.355 \\ 0 & 0 & 0 & 1.0000 \end{pmatrix} $$

- ${}^{b}_{1}T(q_t)$: in this case, the value of q is $\frac{\pi}{4}$, so there is only a rotation around the z-axis. The result can be verified by comparing the new matrix ${}^{1}_{b}T(q_t)$ with ${}^{b}_{1}T_0$ calculated in exercise 1. It is evident that there is a variation only in the $R_z(q)$ component, while $P_z(q)$ remains unchanged.
- ${}^{1}_{2}T(q_t)$: for this configuration, the value of q is $-\frac{\pi}{4}$. As in the previous case, only $R_z(q)$ contributes to the new configuration, while the traslational part remains unchanged. The value present in the last column derives from the initial configuration.
- ${}^{2}_{3}T(q_t)$: in this case, since q is zero, the configuration remains unchanged. It is evident that ${}^{2}_{3}T(q_t) = {}^{2}_{3}T_0$.
- ${}^{3}_{4}T(q_t)$: the value of q in this configuration is $-\frac{\pi}{4}$. As a result, there is only a rotational contribution along the z-axis and no translation.
- ${}^{4}_{5}T(q_t)$: the value of q, as in the case of ${}^{2}_{3}T(q_t)$, is zero. Therefore, no rotations or variations occur. The resulting matrix is equivalent to the initial matrix, ${}^{4}_{5}T_0$.
- ${}^{5}_{6}T(q_t)$: this configuration is characterized by a translational contribution, with q equal to 0.15. The matrix remains unchanged from the initial configuration in terms of the rotational component, while $P_z(q)$ is affected by the traslation along the z-axis.
- ${}^{6}_{7}T(q_t)$: in the final configuration, the value of q is $\frac{\pi}{4}$, corresponding to a rotation around the z-axis. This means that the translational part, $P_z(q)$, remains unchanged. As a result, the new transformation matrix ${}^{6}_{7}T(q_t)$ will differ from the initial configuration matrix ${}^{6}_{7}T_0$ only in its rotational component, specifically in the elements of the R_z sub-matrix that encode the rotation about the z-axis.

Q1.3

For this part of the assignment, we used the following equation to compute the transformation matrix from the base to a given frame:

$$ {}^{i}_{e}T = \prod_{i=1}^{e} {}^{i-1}_{i}T $$

The task required computing the transformation matrices for two different configurations:

$$ {}^{b}_{e}T = \begin{pmatrix} -0.5000 & -0.5000 & -0.7071 & -0.7039 \\ 0.5000 & 0.5000 & -0.7071 & -0.7039 \\ 0.7071 & -0.7071 & 0.0000 & 0.5155 \\ 0 & 0 & 0 & 1.0000 \end{pmatrix} $$

This matrix describe the final configuration of the manipulator after the simulation. The traslational's result along z axes can be verified with Fig.3: it is evident that the total traslation is 0.5155 metres; while the Fig.4 display the traslation's result, along y and x with the same value of -0.7039.
${}^{5}_{3}T$ =

Q1.4

In the last exercise, it is required to compute the Jacobian matrix of a manipulator for the end-effector, based on a given geometric model.
The basic Jacobian matrix, which consists of two components: an angular contribution matrix ${}^{b}J_{e}^{A}$, and a linear contribution matrix ${}^{b}J_{e/b}^{L}$. The basic Jacobian is expressed as:

$$ {}^{b}J_{e/b} = \begin{pmatrix} {}^{b}J_{e}^{A} \\ {}^{b}J_{e/b}^{L} \end{pmatrix} $$

These contributions are computed based on the type of joint (prismatic or rotational) considered, using the following relationships:

$$ \begin{array}{l} \text{Rotational joint} \\ \text{Prismatic joint} \end{array} \quad {}^{b}J_{e}^{A} = \begin{cases} k_z \\ \mathbf{0} \end{cases} \quad {}^{b}J_{e/b}^{L} = \begin{cases} k_z \times r_{e/b} \\ k_z \end{cases} \tag{2} $$

where $\mathbf{k_z}$ is the unit vector along the joint axis, and $r_{e/b}$ is the position vector from the base to the end-effector. We obtain the Jacobian for the manipulator's end-effector, which reflects both the joint contributions and the rigid-body effects:

$$ {}^{b}J_{e/b} = \begin{pmatrix} 0 & 0 & 0 & 0 & 0 & 0 & 0 \\ 0 & 0 & 0 & 0 & 0 & 0 & 0 \\ 1.0000 & 1.0000 & 1.0000 & 1.0000 & 1.0000 & 0 & 1.0000 \\ 0 & 0 & 0.0500 & 0.2125 & 0.2797 & 0 & 0.7039 \\ 0 & 0 & -0.0500 & -0.2125 & -0.2797 & 0 & -0.7039 \\ 0 & 0 & 0 & 0 & 0 & 1.0000 & 0 \end{pmatrix} $$

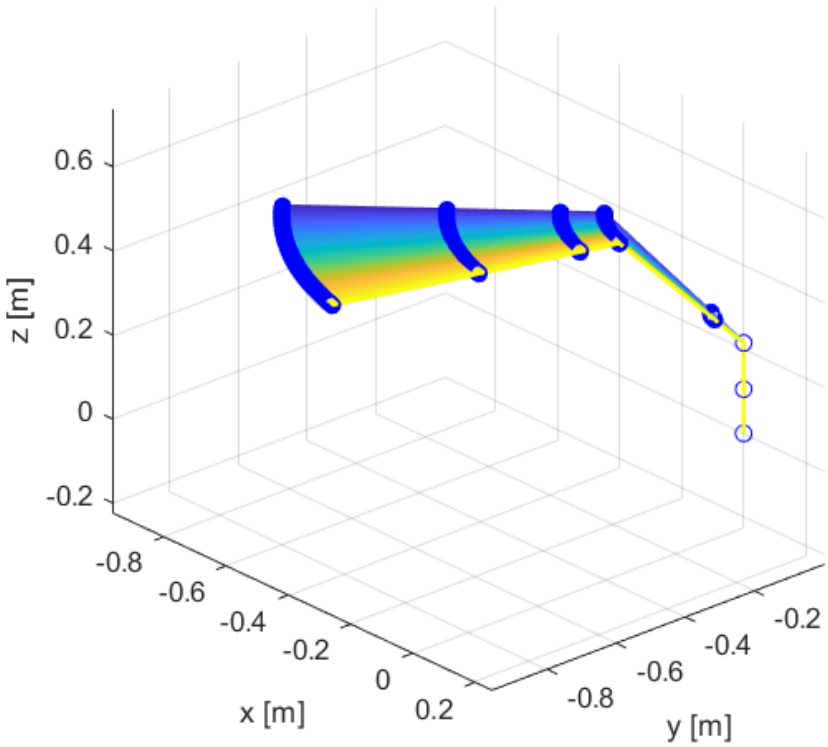

Figure 2: Descritpion of the manipulator's motion with a 3 dimentional graph. x and y are horizontal axis, while z is vertical axes. Measurement's unit for the three axis is meters.

3 Appendix

[Comment] Add here additional material (if needed)

3.1 Appendix A

3.2 Appendix B

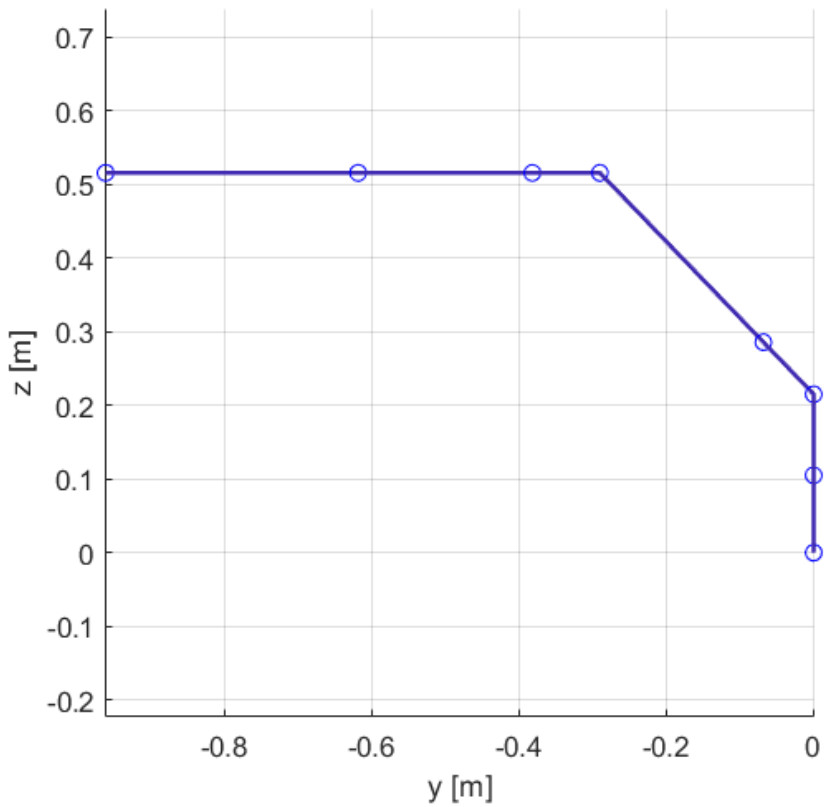

Figure 3: Configuration of the manipulator at the simulation's end. Measurement's unit for each axis is meters.

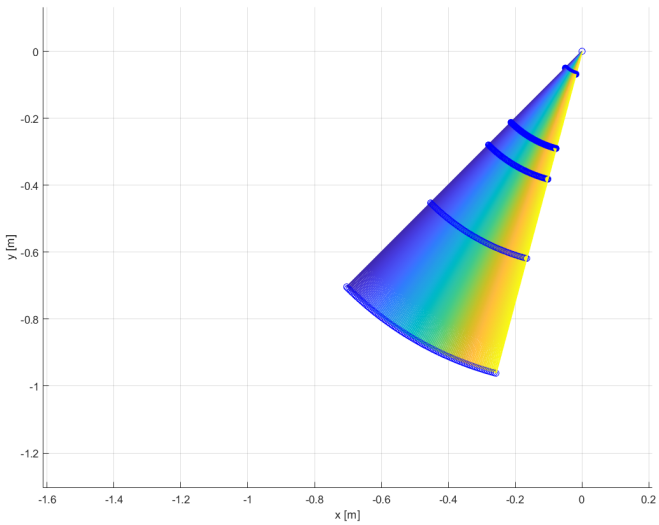

Figure 4: Fig.2 on plane xy