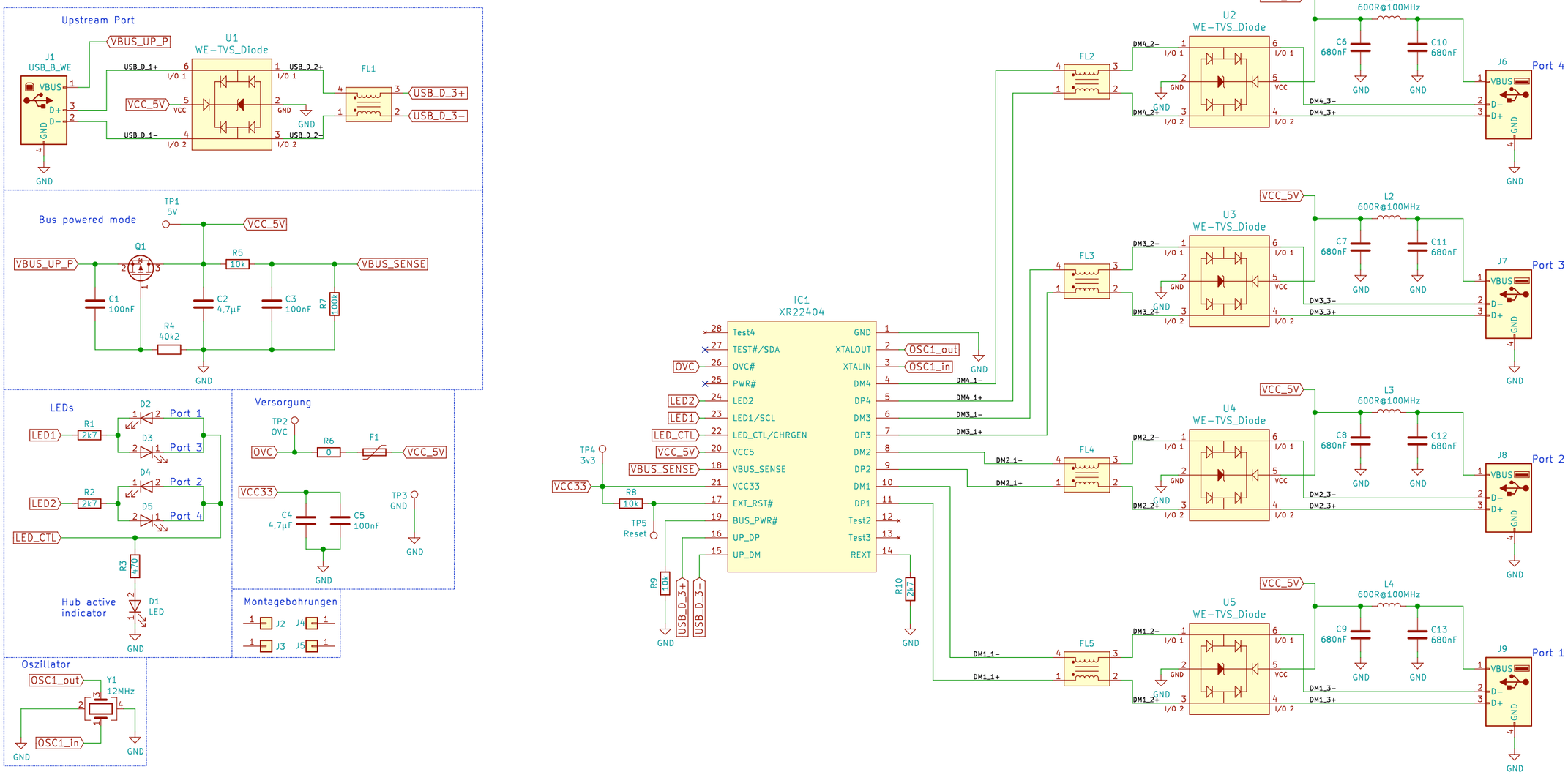

Copyright Caroline Brix 2017.
This documentation describes Open Hardware and is licensed under the CERN OHL v. 1.2.
You may redistribute and modify this documentation under the terms of the CERN OHL v.1.2. (http://ohwr.org/cernohl). This documentation is distributed WITHOUT ANY EXPRESS OR IMPLIED WARRANTY, INCLUDING OF MERCHANTABILITY, SATISFACTORY QUALITY AND FITNESS FOR A PARTICULAR PURPOSE. Please see the CERN OHL v.1.2 for applicable conditions

DK1CMB Lang Txt1 Name_1

Chip: Exar XR22404

Caroline Brix DK1CMB

Sheet: /
File: USB-Hub V2.0.sch

Title: 4 Port 2.0 USB-Hub

Size: A3	Date: 2017-10-23	**Rev: a**
KiCad E.D.A. kicad (2017-10-17 revision 537804b)-master		Id: 1/1