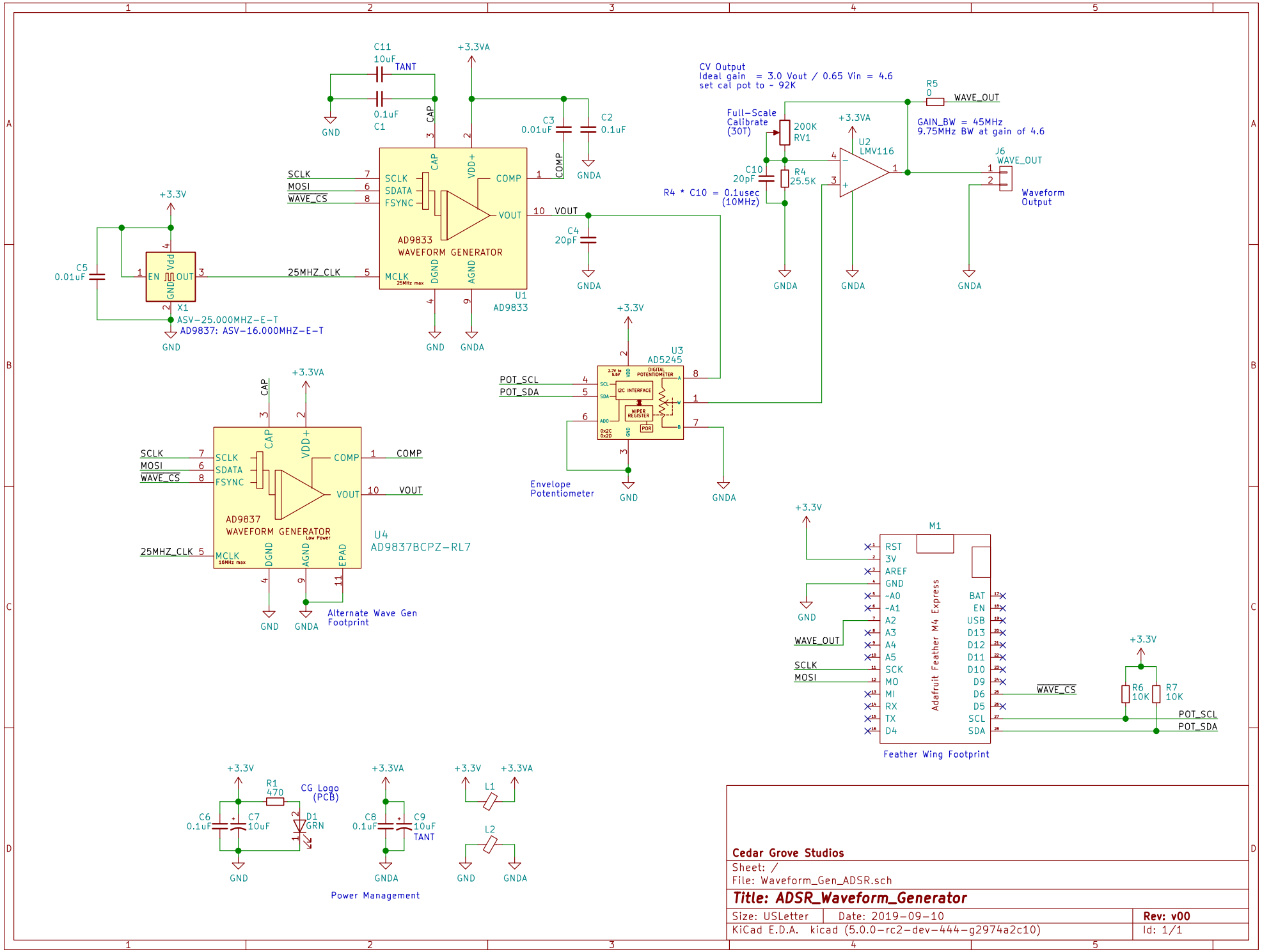

Cedar Grove Studios

Sheet: /

File: Waveform_Gen_ADSR.sch

Title: ADSR_Waveform_Generator

Size: USLetter	Date: 2019-09-10	**Rev: v00**
KiCad E.D.A. kicad (5.0.0-rc2-dev-444-g2974a2c10)		Id: 1/1