INFORMATION AND SPECIFICATIONS CONTAINED HEREIN ARE CONFIDENTIAL AND PROPRIETARY. THEY ARE THE PROPERTY OF MAYFIELD ROBOTICS, AND SHALL NOT BE REPRODUCED OR COPIED OR USED IN WHOLE OR IN PART FOR ANY REASON WITHOUT WRITTEN PERMISSION OF MAYFIELD ROBOTICS.

REVISION TABLE				
ECO	REVISION	DESCRIPTION	DATE	APPROVED
	C01	ADDED EMI SHIELDING (ITEMS 17 &18, ADD NOTE 10 & DETAIL D)	02MAY18	J UMHOEFER
	C02	MOVE FERRITE EMI FILTERS UP FROM SA-00071 (ADD ITEMS 18-22, UPDATE NOTE 10). CLARIFIED NOTE 6.	15MAY18	
ECO-000057	D01	BUMP REV TO USE NEW SA-00071 WITH EMI SHIELDING	12MAY18	J UMHOEFER
ECO-000100	D02	BUMP REV TO ACCOUNT FOR SA-00071 REV BUMP	25JUL18	J UMHOEFER

NOTES, UNLESS OTHERWISE SPECIFIED:

1. REFER TO BOM FOR COMPLETE AND CURRENT LIST OF MATERIALS. VENDOR NAME AND VENDOR PN ARE FOR REFERENCE ONLY.
2. COMPONENTS SHOWN WITHOUT ITEM NUMBERS ARE FOR REFERENCE ONLY AND REPORT TO UPPER LEVEL ASSEMBLIES.
3. SOME HARDWARE NOT SHOWN FOR CLARITY.
4. COMPONENTS MUST BE RoHS COMPLIANT AND TRACEABILITY OF SUCH MUST BE MADE AVAILABLE UPON REQUEST.
5. FOLLOW MANUFACTURER'S ASSEMBLY INSTRUCTIONS AND ESD HANDLING PRACTICES.
6. THREADED FASTENERS SHALL BE INSTALLED IN ACCORDANCE WITH MANUFACTURER'S TORQUE SPECIFICATION UNLESS OTHERWISE SPECIFIED. INSTALLATION TORQUE TO BE:
   OM-00052 (ITEM 14)..... 10±1 N-m (89±9 lb-in).
   OM-00058 (ITEM 9)..... 5±0.5 N-m (44±4 lb-in). C02
7. REFER TO MAYFIELD ROBOTICS QA-00025 FOR GENERAL INSPECTION REQUIREMENTS AND SPECIFIC REQUIREMENTS FOR DIMENSIONS INCLUDING "CC-", AN OVAL, AND/OR OTHER MODIFIERS.

8. ROUTE CABLE (ITEM 10) UNDER HOOKS AND THROUGH MOUSEHOLE AS SHOWN IN DETAIL C.

9. PRESS CORD (ITEM 16--NOT SHOWN) INTO GROOVES AROUND CIRCUMFERENCE OF UPPER BAFFLE (ITEM 2)WHERE INDICATED AND TRIM TO LENGTH.

10. USE POLYIMIDE TAPE (ITEM 19, NOT SHOWN) TO ASSEMBLE QTY. 2 SPLIT FERRITE FILTERS (ITEM 22) TOGETHER ONTO SMALL FLEX CABLE (PART OF ITEM 6). SLIDE LARGE FERRITE FILTER (ITEM 23) ONTO LARGE FLEX CABLE (PART OF ITEM 6). APPLY FOAM TAPE (ITEMS 20 & 21) AND MOUNT FILTERS TO LOWER BAFFLE APPROXIMATELY WHERE INDICATED. (SEE VIEW D) C02

ITEM NO.	QTY.	UNIT OF MEASURE	PART NUMBER	DESCRIPTION	
1	1	EA	CM-00313	LIGHT BAFFLE, LOWER -- DEPTH SENSOR	
2	1	EA	CM-00315	LIGHT BAFFLE, UPPER -- DEPTH SENSOR	
3	1	EA	CM-00337	FILM, SPLITTER -- DEPTH SENSOR	
4	1	EA	CM-00336	SPLITTER FRAME -- DEPTH SENSOR	
5	1	EA	CM-00344	HEAT SINK, ILLUMINATOR	
6	1	EA	SA-00071	FLEX ASSEMBLY -- DEPTH SENSOR	
7	1	EA	SA-00070	LENS ASSEMBLY -- DEPTH SENSOR	
8	1	EA	CM-00343	LUMINAIRE -- DEPTH SENSOR	
9	2	EA	OM-00058	SCREW, K25x6 PT, PAN HEAD	
10	1	EA	WH-00093	CABLE, IR RECEIVER, FRONT	
11	1	EA	CE-00033	PCBA, PROCESSOR -- DEPTH SENSOR	
12	1	EA	OM-00147	THERMAL PAD, ILLUMINATOR -- DEPTH SENSOR	
13	1	EA	OE-00243	JUMPER, SAFETY INTERLOCK -- DEPTH SENSOR	
14	16	EA	OM-00052	SCREW,K30X10,PT WASHER HEAD	
15	1	EA	PL-00022	LABEL, SAFETY -- DEPTH SENSOR	
16	2		CM-00379	GASKET, DEPTH SENSOR	
17	1	EA	CM-00412	EMI SHIELD, LUMINAIRE -- DEPTH SENSOR	C01
18	1	EA	CM-00413	CONDUCTIVE GASKET, LUMINAIRE -- DEPTH SENSOR	C01
19	AR	mm	CN-00039	Tape, Polyimide, .05mm (.002")	C02
20	1	EA	CM-00414-030	Foam Tape, VHB Adhesive, .3mm Thick, 12 x 30 mm	C02
21	1	EA	CM-00414-012	Foam Tape, VHB Adhesive, .3mm Thick, 12 x 12 mm	C02
22	2	EA	OE-00551	Cable Filter, Ferrite Core, Split, 12 mm Ribbon Cable	C02
23	1	EA	OE-00550	Cable Filter, Ferrite Core, 28 mm Ribbon Cable	C02

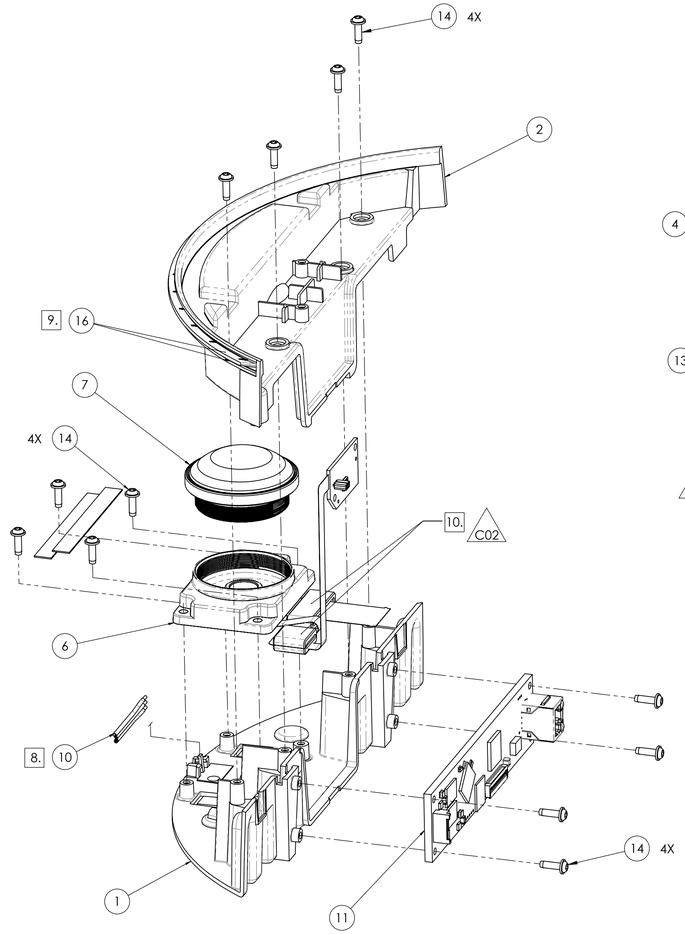

VIEW A: LOWER COMPONENT ASSEMBLY

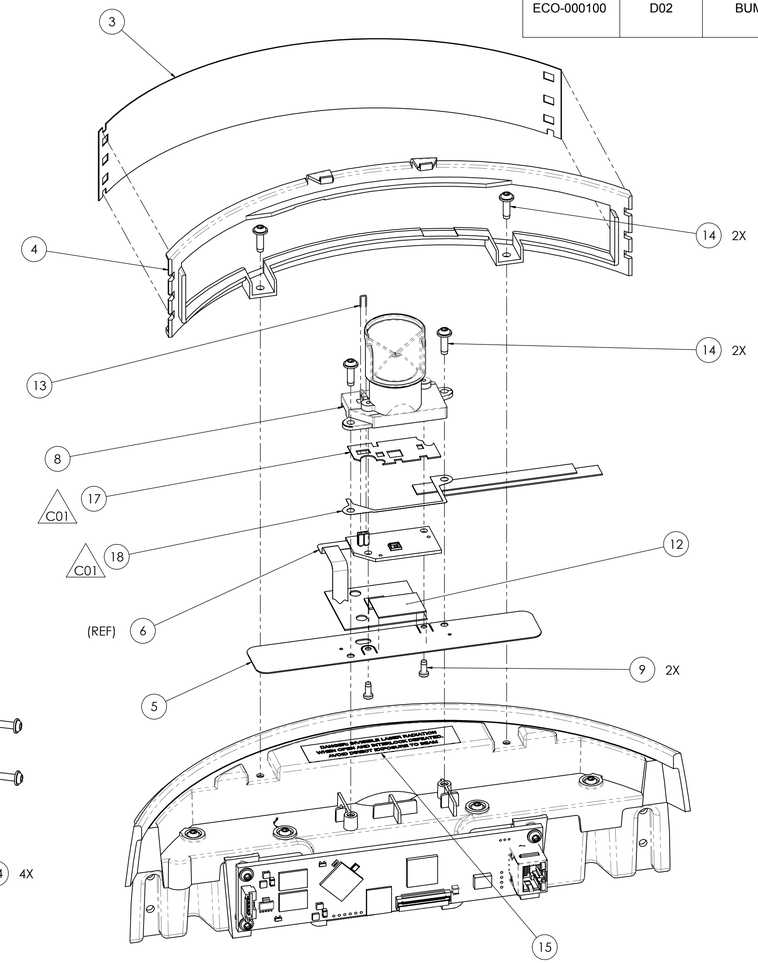

VIEW B: UPPER COMPONENT ASSEMBLY

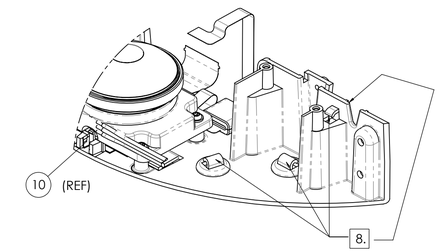

DETAIL C:
IR SENSOR CABLE ROUTING

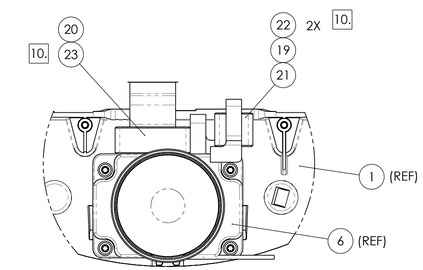

DETAIL D: IMAGER EMI FILTER INSTALLATION C02

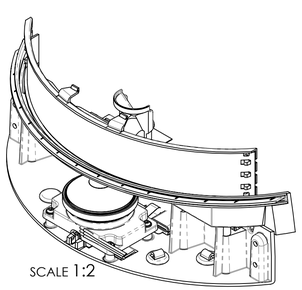

SCALE 1:2

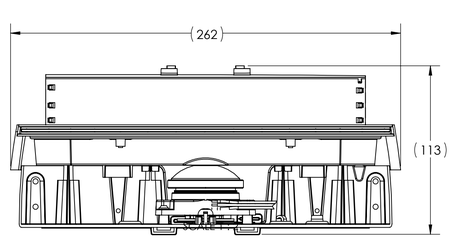

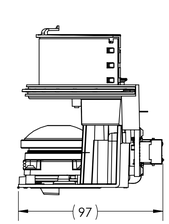

UNLESS OTHERWISE SPECIFIED, DIMENSIONS ARE IN MILLIMETERS
INTERPRET DIMENSIONS AND TOLERANCES PER ASME Y14.5M
TRAILING ZEROS DENOTE TOLERANCE

DO NOT SCALE DRAWING

THIRD ANGLE PROJECTION

TOLERANCES
X = ± 0.5
X.X = ± 0.25
X.XX = ± 0.13
ANGLES = ± 1°
UNLESS OTHERWISE SPECIFIED

	APPROVED	DATE
DRAWN BY	D ANDERSON	15MAR18
DESIGNED BY	D ANDERSON	15MAR18

MAYFIELD ROBOTICS
400 CONVENTION WAY
REDWOOD CITY, CA 94063

DEPTH SENSOR

DWG NUMBER **SA-00060** REV **D02**
SIZE **D** SCALE 3:4 SHEET 1 of 1