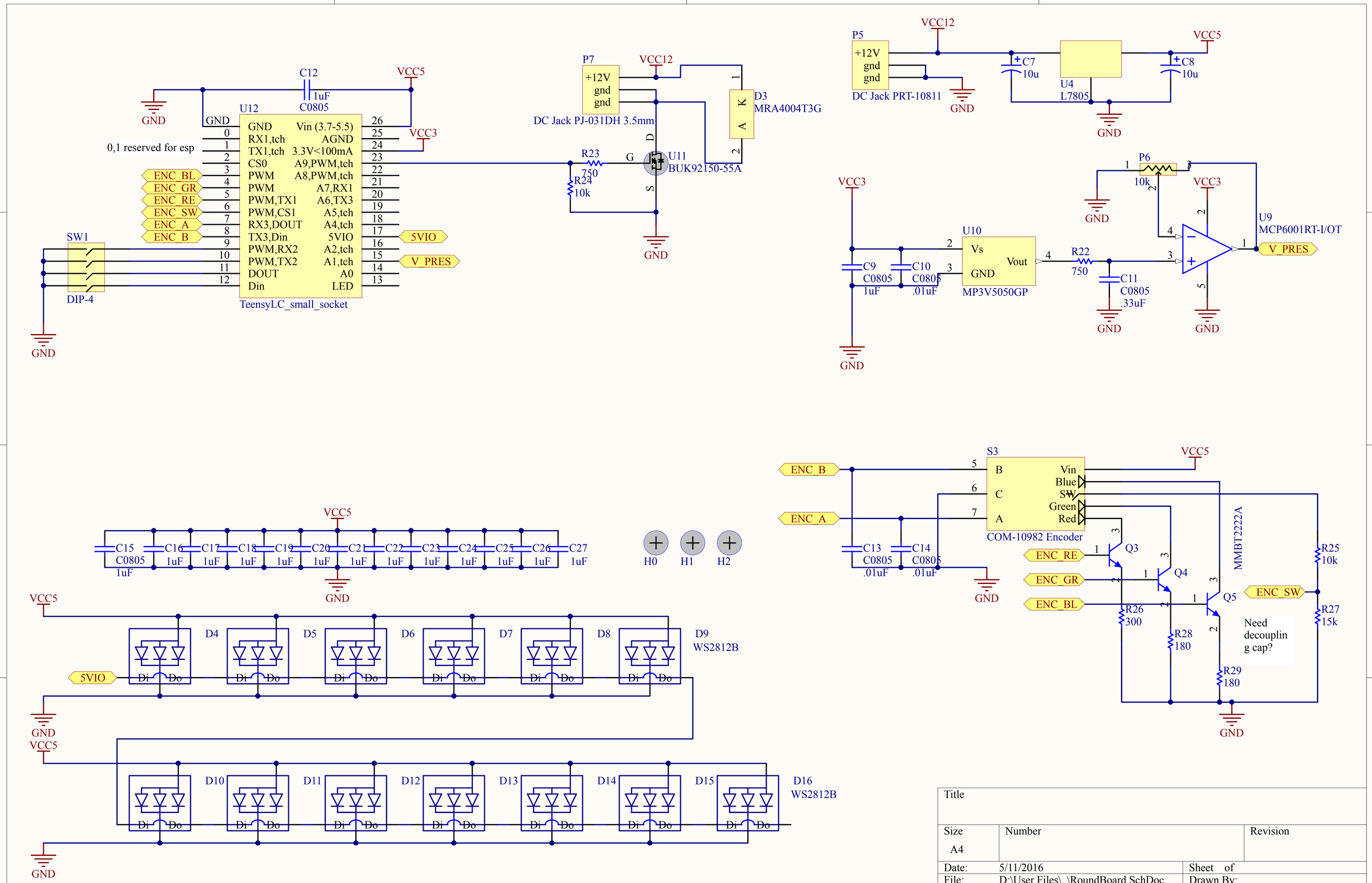

Title		
Size A4	Number	Revision
Date: 5/11/2016		Sheet of
File: D:\User Files\..\RoundBoard.SchDoc		Drawn By: