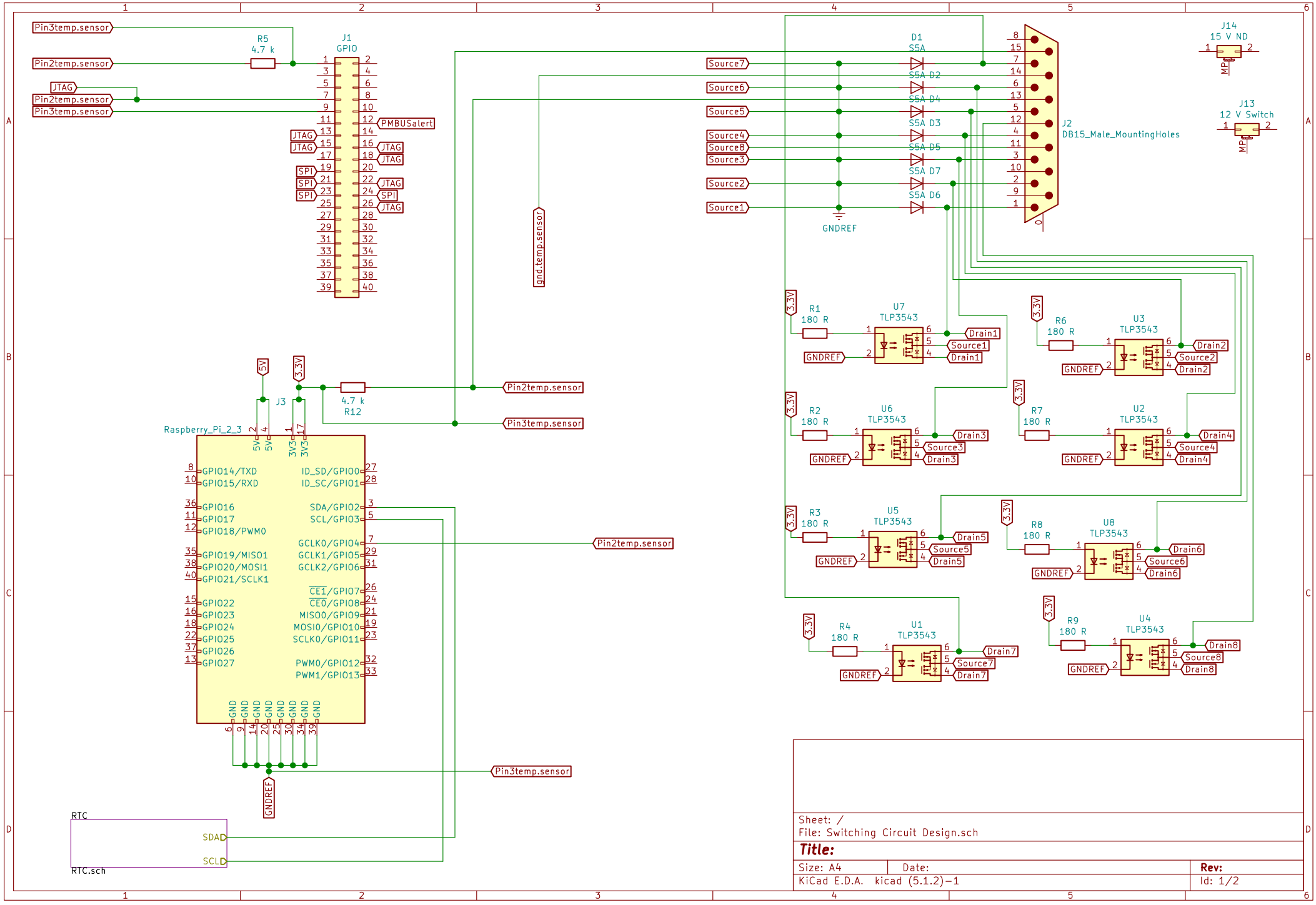
Pin3temp.sensor
Pin2temp.sensor
JTAG
R5
4.7 k
J1
GPIO
PMBUSalert
SPI
gnd.temp.sensor
Source7
Source6
Source5
Source4
Source8
Source3
Source2
Source1
D1
S5A
S5A D2
S5A D4
S5A D3
S5A D5
S5A D7
S5A D6
GNDREF
J2
DB15_Male_MountingHoles
J14
15 V ND
J13
12 V Switch
MP
R1
180 R
U7
TLP3543
Drain1
Source1
R6
U3
Drain2
Source2
R2
U6
Drain3
Source3
R7
U2
Drain4
Source4
R3
U5
Drain5
Source5
R8
U8
Drain6
Source6
R4
U1
Drain7
Source7
R9
U4
Drain8
Source8
3.3V
5V
J3
4.7 k
R12
Raspberry_Pi_2_3
GPIO14/TXD
GPIO15/RXD
GPIO16
GPIO17
GPIO18/PWM0
GPIO19/MISO1
GPIO20/MOSI1
GPIO21/SCLK1
GPIO22
GPIO23
GPIO24
GPIO25
GPIO26
GPIO27
ID_SD/GPIO0
ID_SC/GPIO1
SDA/GPIO2
SCL/GPIO3
GCLK0/GPIO4
GCLK1/GPIO5
GCLK2/GPIO6
CE1/GPIO7
CE0/GPIO8
MISO0/GPIO9
MOSI0/GPIO10
SCLK0/GPIO11
PWM0/GPIO12
PWM1/GPIO13
GND
RTC
SDA
SCL
RTC.sch
Sheet: /
File: Switching Circuit Design.sch
Title:
Size: A4
Date:
Rev:
KiCad E.D.A. kicad (5.1.2)-1
Id: 1/2

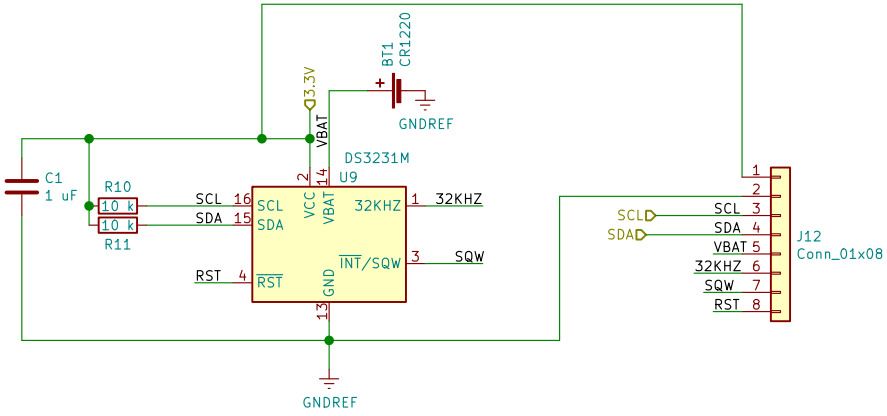

Sheet: /RTC/
File: RTC.sch

Title:

Size: A4	Date:	**Rev:**
KiCad E.D.A. kicad (5.1.2)-1		Id: 2/2