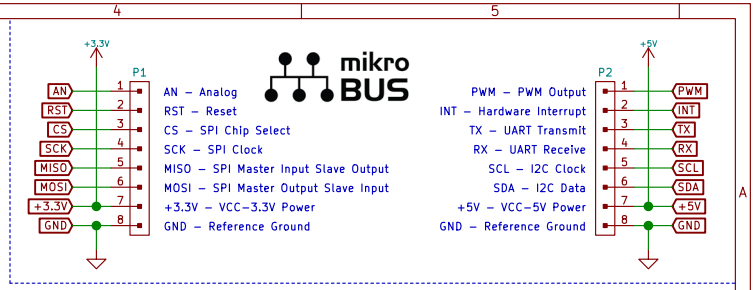

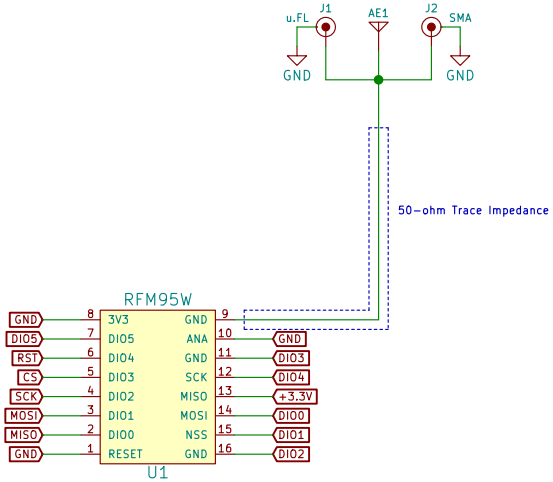

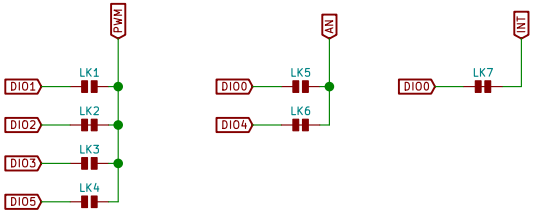

	DIOx Mapping	Sleep	Standby	FSRx/Tx	Rx	Tx
DIO0	00	-			PayloadReady	PacketSent
	01	-			CrcOk	-
	10	-				
	11	-	TempChange / LowBat		TempChange / LowBat	
DIO1	00	FifoLevel		FifoLevel	FifoLevel	
	01	FifoEmpty		FifoEmpty	FifoEmpty	
	10	FifoFull		FifoFull	FifoFull	
	11	-				
DIO2	00	FifoFull		FifoFull	FifoFull	
	01	-			RxReady	-
	10	FifoFull			TimeOut	FifoFull
	11	FifoFull			SyncAddress	FifoFull
DIO3	00	FifoEmpty		FifoEmpty	FifoEmpty	
	01	-				TxReady
	10	FifoEmpty		FifoEmpty	FifoEmpty	
	11	FifoEmpty		FifoEmpty	FifoEmpty	
DIO4	00	-	TempChange / LowBat		TempChange / LowBat	
	01	-		PllLock		
	10	-			TimeOut	-
	11	-			Rssi / PreambleDetect	-
DIO5	00	ClkOut if RC	ClkOut		ClkOut	
	01	-		PllLock		
	10	-			Data	
	11	-	ModeReady		ModeReady	

G1
Casco_Logix_Logo

Sheet: /
File: RFM95_mikroBUS.sch

Title: RFM95 mikroBUS Module

Size: USLetter	Date: 2016–01–02	Rev: 1.0
KiCad E.D.A. kicad 4.0.4–stable		Id: 1/1