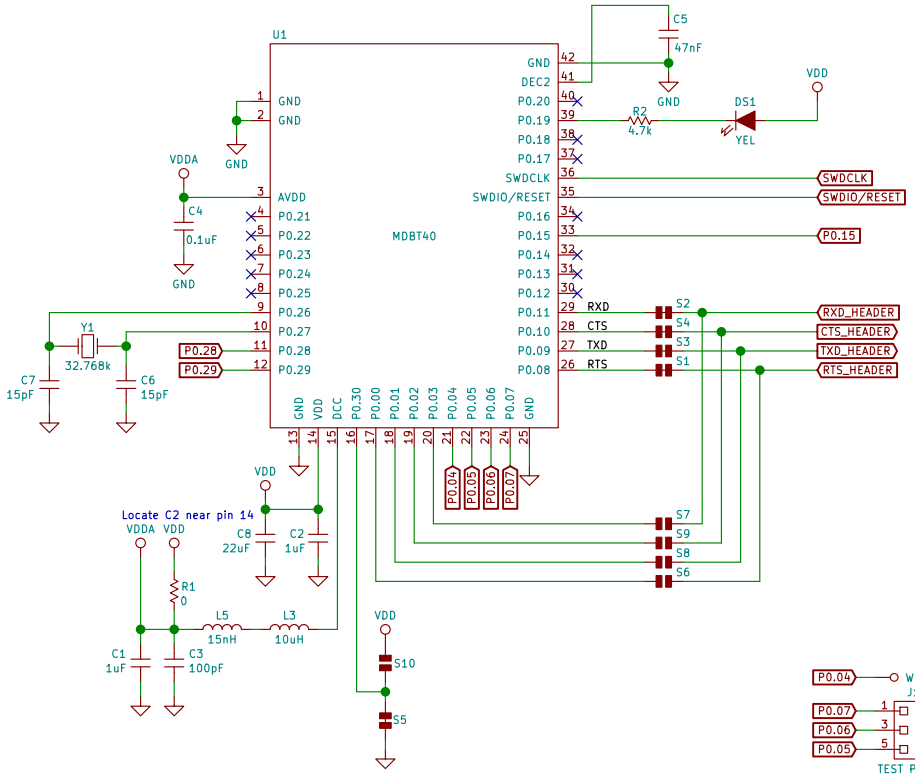

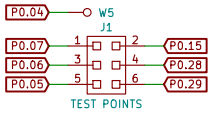

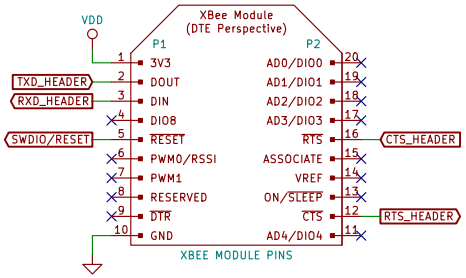

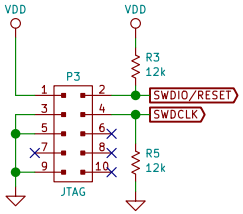

Default UART Settings

Short	Open	Connection
S1	S6	RTS>P0_8
S2	S7	RXD>P0_11
S3	S8	TXD>P0_9
S4	S9	CTS>P0_10
S5	S10	P0_30>GND

Alternate UART Settings

Short	Open	Connection
S6	S1	RTS>P0_0
S7	S2	RXD>P0_3
S8	S3	TXD>P0_1
S9	S4	CTS>P0_2
S10	S5	P0_30>VDD

Sheet: /
File: Raytac_MDBT40_XBee_Module.sch

Title: MDBT40 XBee Module

Size: USLetter	Date: 2016-11-25	Rev: 0.1
KiCad E.D.A. kicad 4.0.4-stable		Id: 1/1