LDO + Watchdog

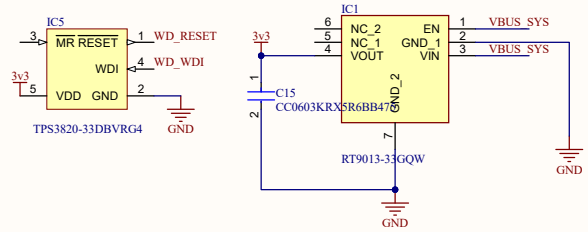

USB Power Protection

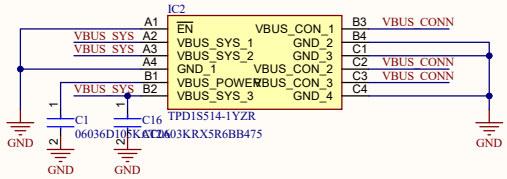

USB + TVS

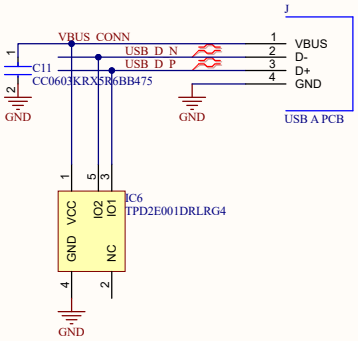

RPI2040

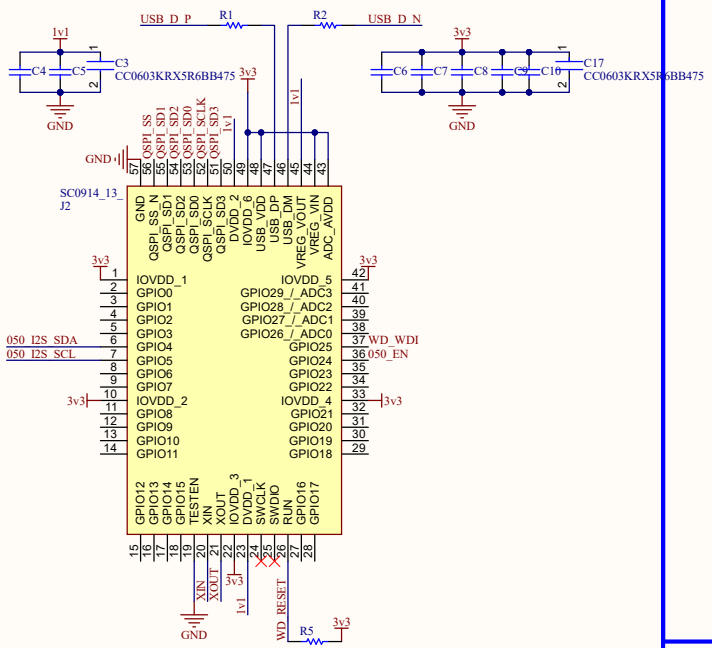

FLASH + Crystal

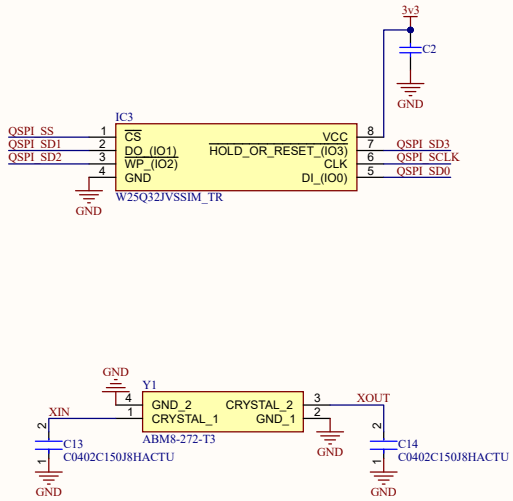

SE050 Secure Element

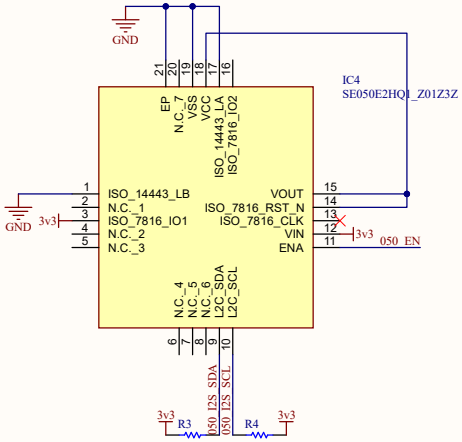

Title	Cashstick RPI2040	
Size A3	Number	Revision 1.1
Date: 10/03/2025		Sheet of
File: D:\Faizan Faris\..\Cashstick.SchDoc		Drawn By: Faizan Khan