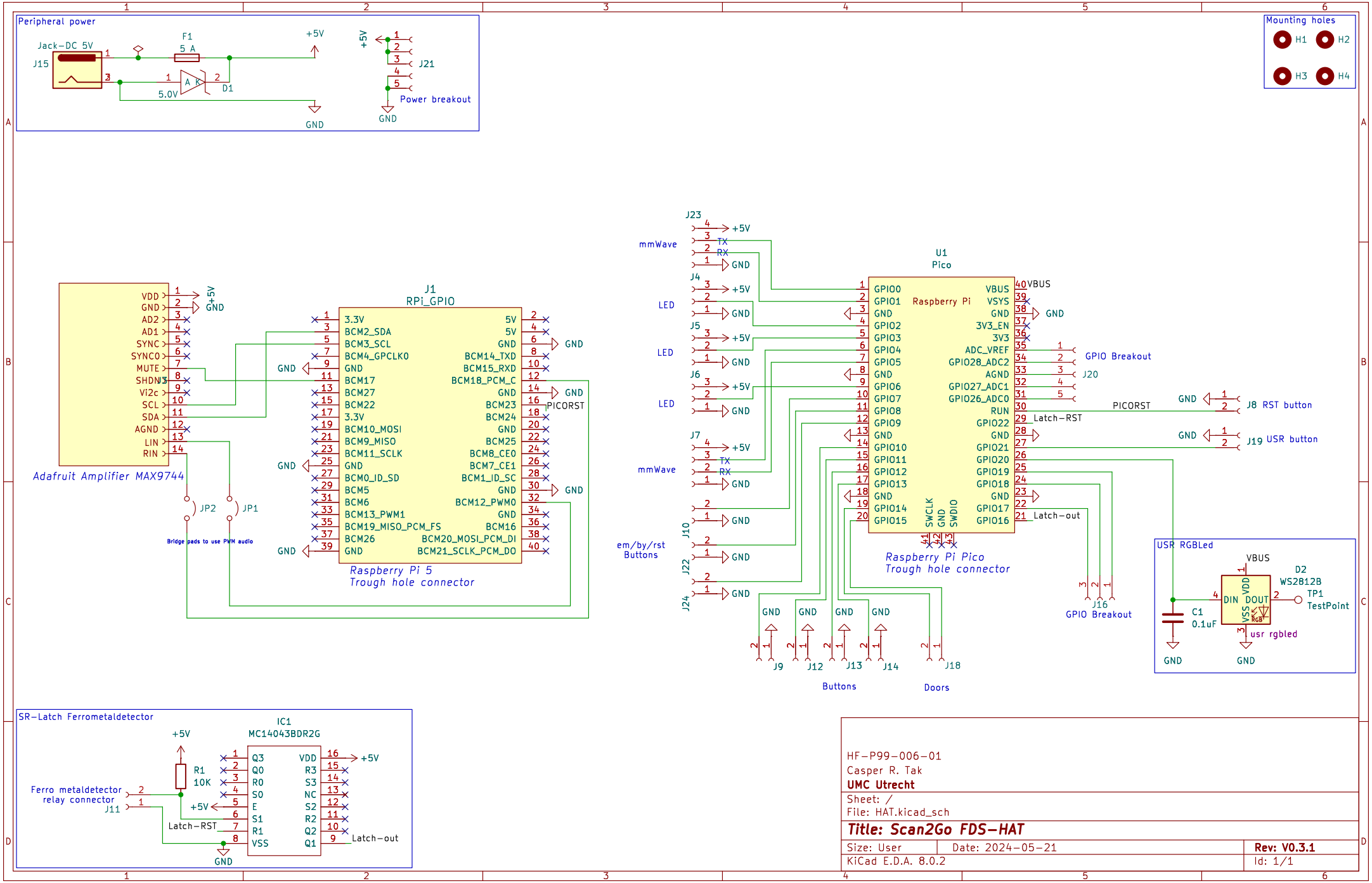
Peripheral power
Jack-DC 5V
J15
F1
5 A
+5V
5.0V
D1
GND
J21
Power breakout
Mounting holes
H1
H2
H3
H4
Adafruit Amplifier MAX9744
VDD
GND
AD2
AD1
SYNC
SYNC0
MUTE
SHDN
Vi2c
SCL
SDA
AGND
LIN
RIN
JP2
JP1
Bridge pads to use PWM audio
J1
RPi_GPIO
3.3V
BCM2_SDA
BCM3_SCL
BCM4_GPCLK0
BCM17
BCM27
BCM22
BCM10_MOSI
BCM9_MISO
BCM11_SCLK
BCM0_ID_SD
BCM5
BCM6
BCM13_PWM1
BCM19_MISO_PCM_FS
BCM26
BCM14_TXD
BCM15_RXD
BCM18_PCM_C
BCM23
BCM24
BCM25
BCM8_CE0
BCM7_CE1
BCM1_ID_SC
BCM12_PWM0
BCM16
BCM20_MOSI_PCM_DI
BCM21_SCLK_PCM_DO
PICORST
Raspberry Pi 5
Trough hole connector
mmWave
LED
em/by/rst
Buttons
J23
J4
J5
J6
J7
J10
J22
J24
U1
Pico
Raspberry Pi
GPIO0
GPIO1
GPIO2
GPIO3
GPIO4
GPIO5
GPIO6
GPIO7
GPIO8
GPIO9
GPIO10
GPIO11
GPIO12
GPIO13
GPIO14
GPIO15
VBUS
VSYS
3V3_EN
3V3
ADC_VREF
GPIO28_ADC2
AGND
GPIO27_ADC1
GPIO26_ADC0
RUN
GPIO22
GPIO21
GPIO20
GPIO19
GPIO18
GPIO17
GPIO16
SWCLK
SWDIO
Latch-RST
Latch-out
GPIO Breakout
J20
J8 RST button
J19 USR button
J16
J9
J12
J13
J14
J18
Buttons
Doors
USR RGBLed
D2
WS2812B
DIN
DOUT
VDD
VSS
C1
0.1uF
TP1
TestPoint
usr rgbled
SR-Latch Ferrometaldetector
IC1
MC14043BDR2G
Q3
Q0
R0
S0
E
S1
R1
VSS
VDD
R3
S3
NC
S2
R2
Q2
Q1
R1
10K
Ferro metaldetector
relay connector
J11
Latch-RST
Latch-out
HF-P99-006-01
Casper R. Tak
UMC Utrecht
Sheet: /
File: HAT.kicad_sch
Title: Scan2Go FDS-HAT
Size: User
Date: 2024-05-21
Rev: V0.3.1
KiCad E.D.A. 8.0.2
Id: 1/1