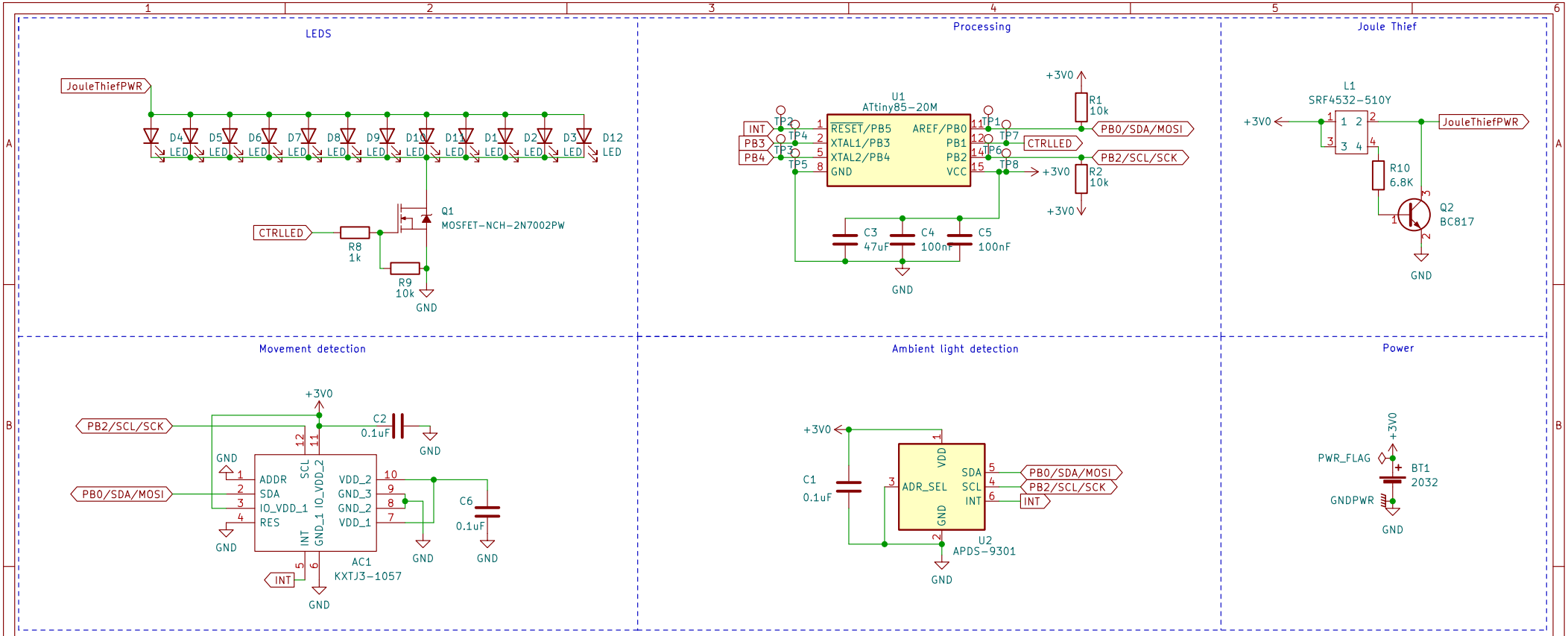

Casper R. Tak

Sheet: /
File: LED night sign.kicad_sch

Title: LED light ornament

Size: A4	Date: 2022-09-30	**Rev: 1.1**
KiCad E.D.A. kicad (6.0.6)		Id: 1/1