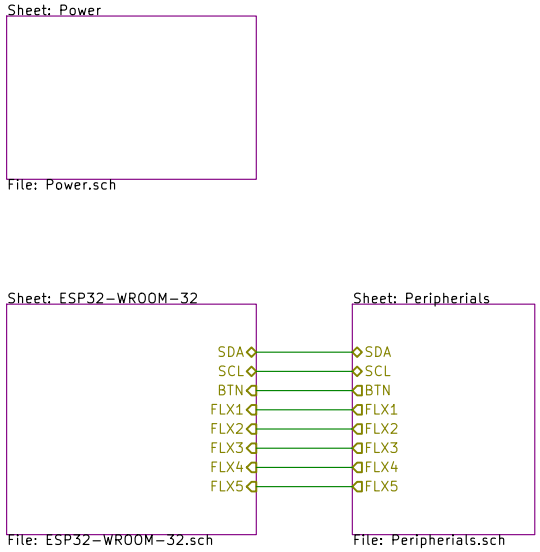

Sheet: /
File: themu.sch

Title: THEMU Hardware

Size: A4	Date: 2020-09-24	**Rev: 02**
KiCad E.D.A. kicad (5.1.6)-1		Id: 1/4

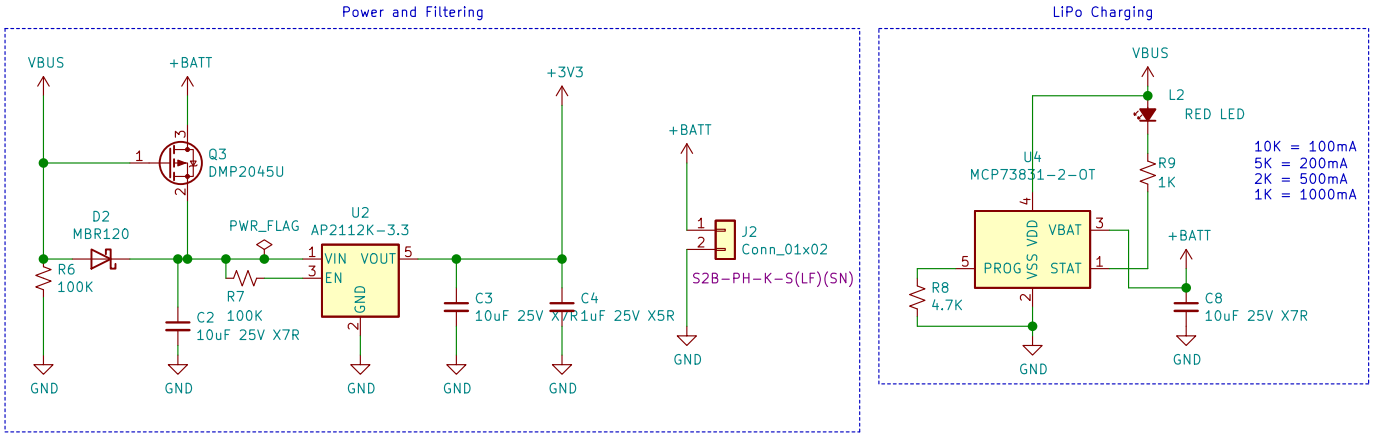

Sheet: /Power/
File: Power.sch

Title: Power

Size: A4	Date: 2020-09-24	**Rev: 02**
KiCad E.D.A. kicad (5.1.6)-1		Id: 2/4

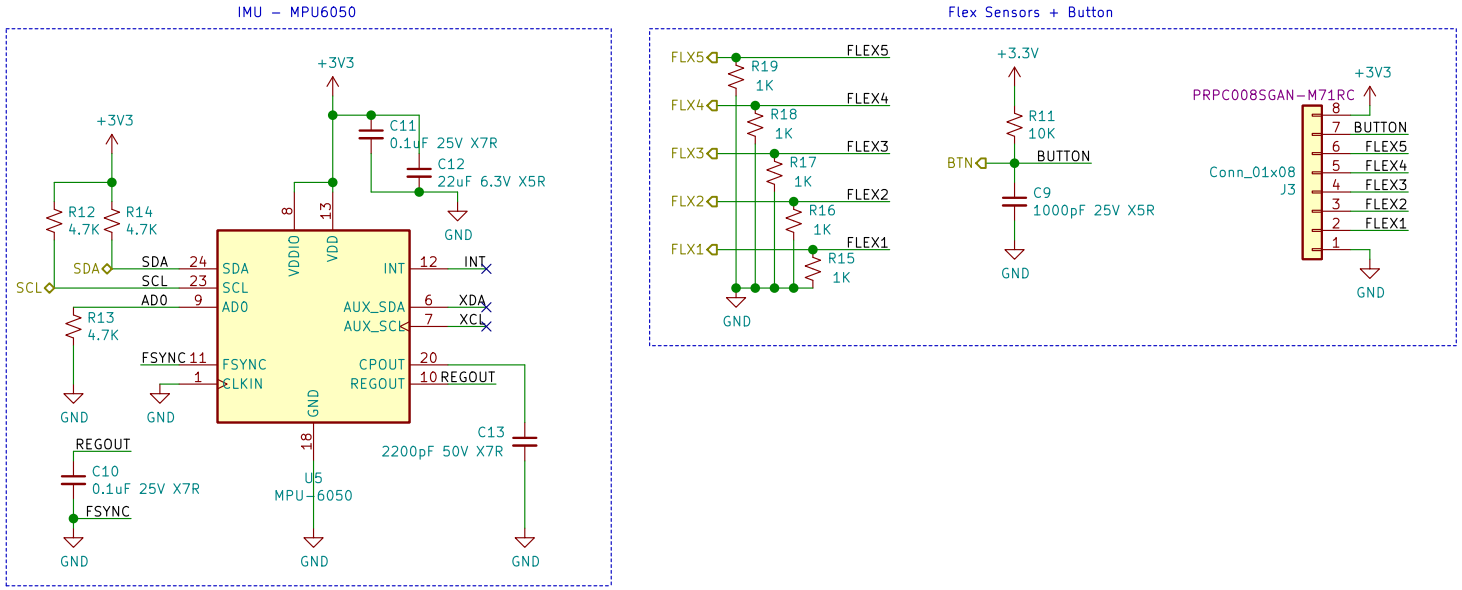

Sheet: /Peripherials/
File: Peripherials.sch

Title: MPU6050

Size: A4	Date: 2020-09-24	**Rev: 02**
KiCad E.D.A. kicad (5.1.6)-1		Id: 3/4

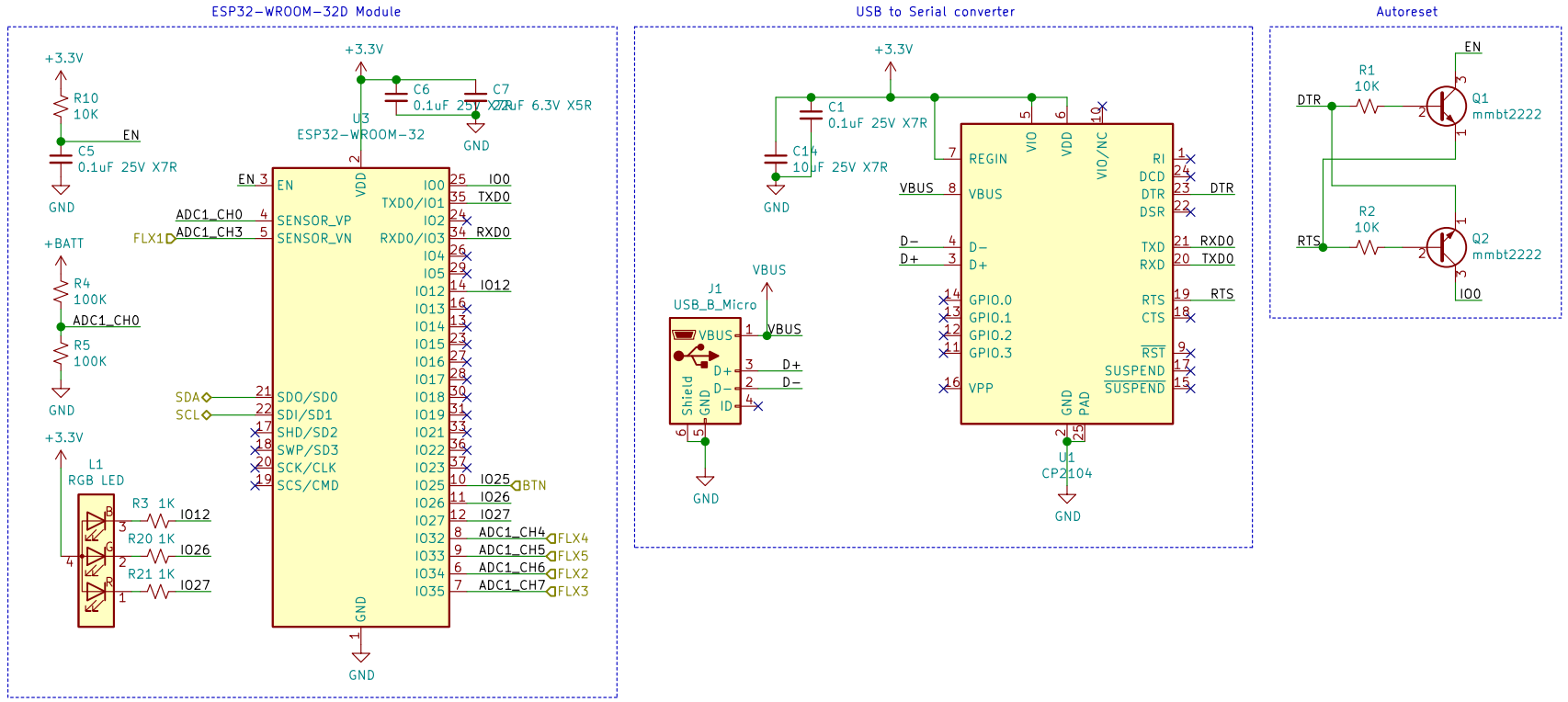

Sheet: /ESP32-WROOM-32/
File: ESP32-WROOM-32.sch

Title: ESP32-WROOM-32

Size: A4	Date: 2020-09-24	Rev: 02
KiCad E.D.A. kicad (5.1.6)-1		Id: 4/4