Instância 1

- quatro portos
- Navio: 6x3

Pátio porto 1

(9,2)	0	(5,2)
(6,4)	0	(4,4)
(7,4)	0	(3,4)
(8,4)	(2,3)	(1,4)

Pátio porto 2

0	0	0
(10,3)	0	(16,3)
(12,4)	(17,3)	(11,4)
(14,4)	(15,4)	(13,4)

Pátio porto 3

0	0	(25,4)
0	(24,4)	(23,4)
0	(22,4)	(21,4)
(20,4)	(19,4)	(18,4)

$F_{(o,d)}$

	D1	D2	D3	D4
O1	0	2	1	6
O2	0	0	4	4
O3	0	0	0	8

Modelo Navio Sozinho – exemplo 1

2	4	4	4	4	4	4	4	4
0	2	4	4	3	4	4	4	4
0	0	4	4	3	4	4	4	4
0	0	4	4	3	4	4	4	4
0	0	4	0	3	4	4	4	4
0	0	3	0	0	3	4	4	4

Instância 2

- Seis portos
- Navio: 5x4

Pátio porto 1

(15,4)	(16,4)	0	0
(12,4)	(13,3)	(14,5)	0
(9,4)	(10,5)	(11,4)	0
(5,5)	(6,4)	(7,4)	(8,4)
(1,5)	(2,4)	(3,4)	(4,5)

Pátio porto 2

0	0	0	0
0	0	0	0
0	0	0	0
0	0	0	0
(17,6)	(18,6)	(19,6)	0

Pátio porto 3

0	0	0	0
0	0	0	0
0	0	0	0
0	0	0	0
0	0	(20,5)	0

Pátio porto 4

0	0	0	0
0	0	0	0
0	0	0	0
(25,6)	(26,6)	(27,6)	0
(21,6)	(22,6)	(23,6)	(24,6)

Instância 2

Pátio porto 5

0	0	0	0
0	0	0	0
0	0	0	0
0	0	0	0
0	0	(28,6)	(29,6)

$F_{(o,d)}$ =

	D1	D2	D3	D4	D5	D6
O1	0	0	1	10	5	0
O2	0	0	0	0	0	3
O3	0	0	0	0	1	0
O4	0	0	0	0	0	7
O5	0	0	0	0	0	2

Exemplo 2 – sem restrição de estabilidade

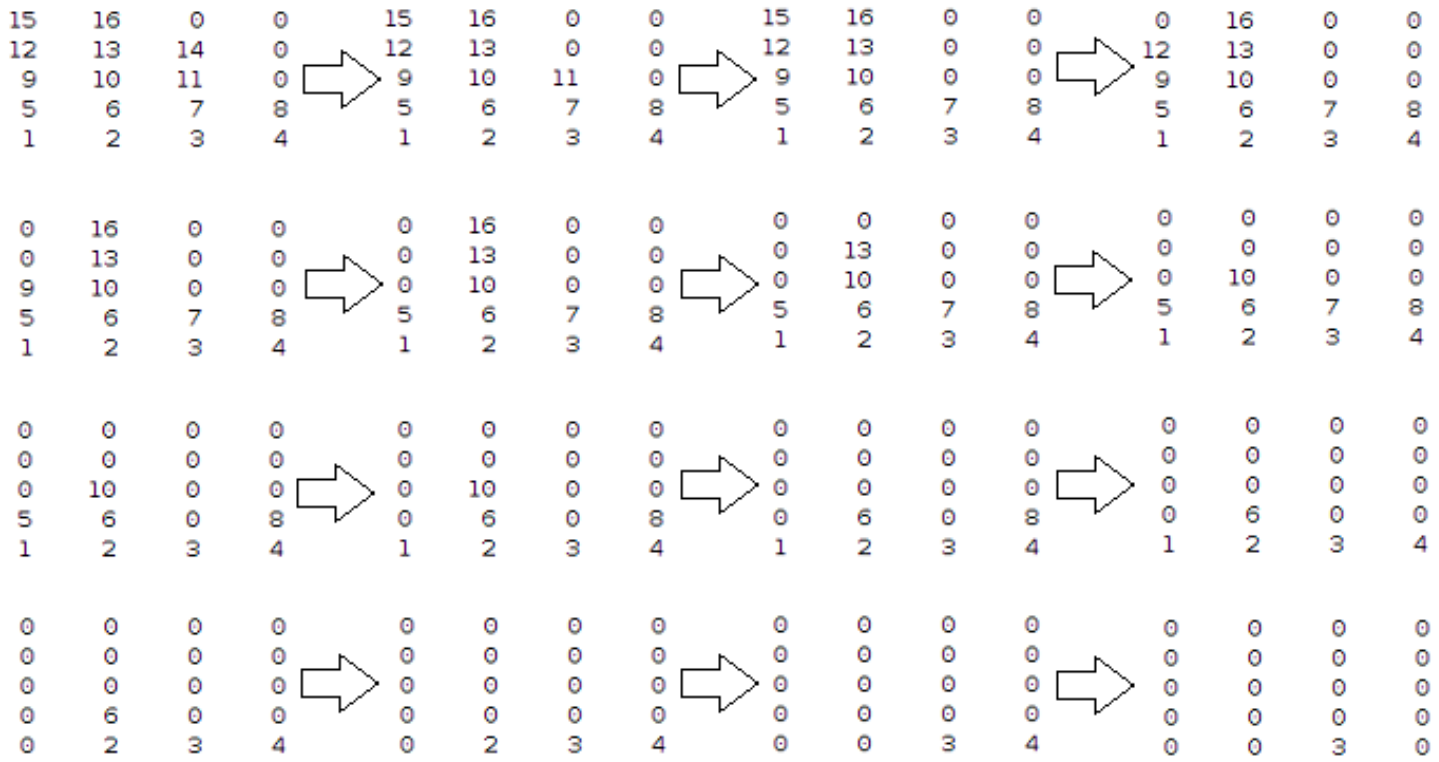

Sequência de retirada no porto 1:

(14,5) - (11,4) - **(**15,4) - (12,4) - (9,4) - (16,4) - (13,3) - (7,4) - (5,5) - (10,5) - (8,4) - (1,5) - (6,4) - (2,4) - (4,5) - (3,4).

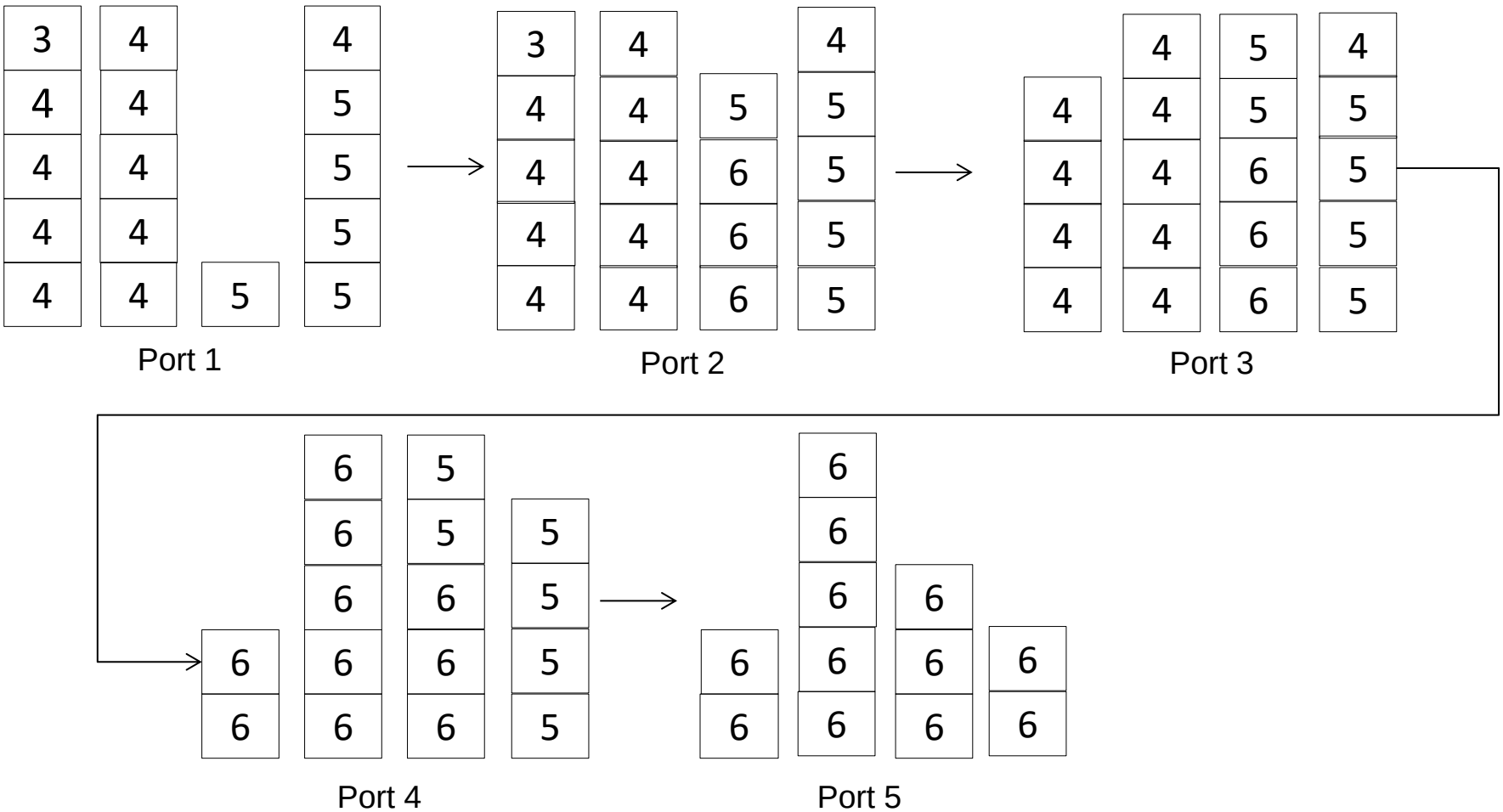
Port 1
Port 2
Port 3
Port 4
Port 5

Sequência de retirada no porto 1:

(14,5) - (11,4) - **(**15,4) - (12,4) - (9,4) - (16,4) - (13,3) - (7,4) - (5,5) - (10,5) - (8,4) - (1,5) - (6,4) - (2,4) - (4,5) - (3,4).

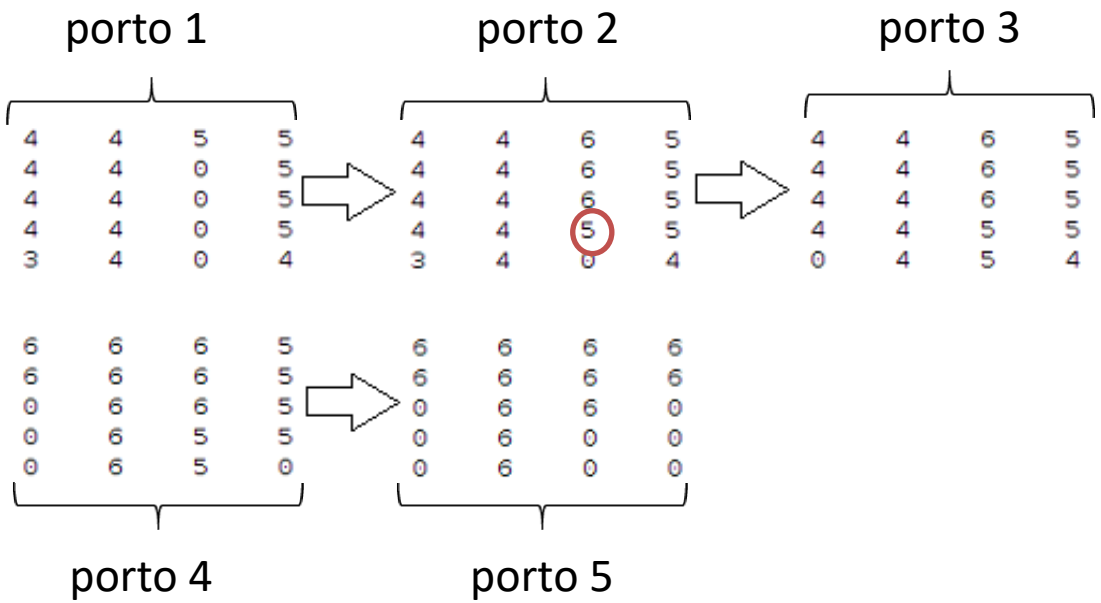

F.O. = 1

$F_{(o,d)}$=

D1	D2	D3	D4	D5	D6
0	0	1	10	5	0
0	0	0	0	0	3
0	0	0	0	1	0
0	0	0	0	0	7
0	0	0	0	0	2

Exemplo 2 – com restrição de estabilidade

Sequência de retirada no porto 1:
(15,4) - (14,5) - (8,4) - (11,4) - (12,4) - (9,4) - (7,4) - (4,5) - (16,4) - (5,5) - (1,5) - (13,3) - (10,5) - (3,4) - (6,4) - (2,4)**.**

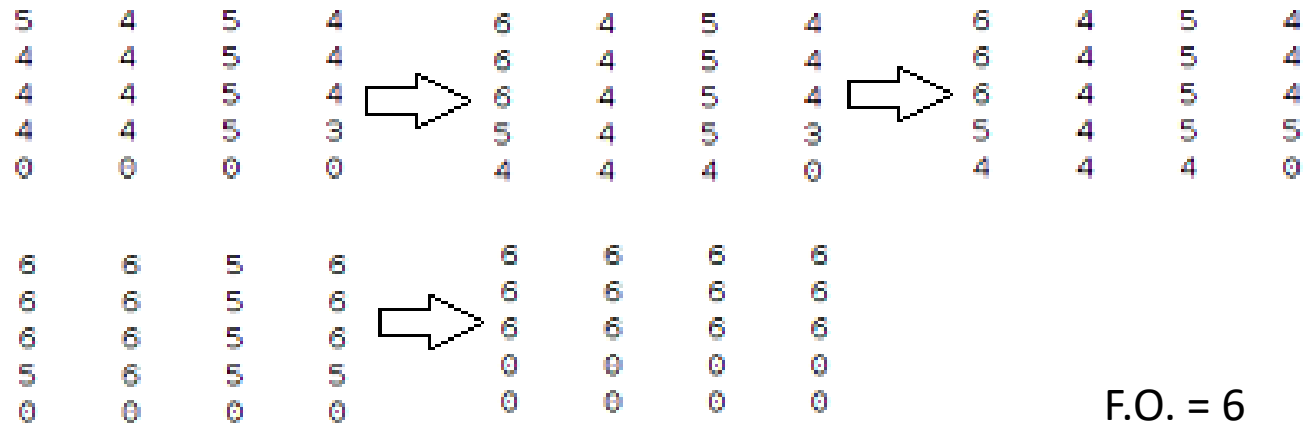

F.O. = 6

Modelo Navio Sozinho – exemplo 2

4	5	4	3
4	5	4	0
4	5	4	0
4	5	4	0
4	5	4	0

4	5	4	6
4	5	4	6
4	5	4	6
4	5	4	3
4	5	4	0

4	5	4	6
4	5	4	6
4	5	4	6
4	5	4	5
4	5	4	0

6	5	6	6
6	5	6	6
6	5	6	6
0	5	6	5
0	5	0	0

6	0	6	6
6	0	6	6
6	0	6	6
6	0	6	6
0	0	0	0

Exemplo Navio 3 – com estabilidade

4	7	9	5	5	6	4	6	5	10	4
0	0	0	0	0	0	0	0	0	0	0
0	0	0	0	0	0	0	0	0	0	0
0	0	0	0	0	0	0	0	0	0	0
0	0	0	0	0	0	0	0	0	0	0
0	0	0	0	0	0	0	0	0	0	0

10	7	9	5	5	6	4	6	5	10	4
9	7	9	5	0	3	0	0	5	9	4
0	0	0	0	0	0	0	0	0	0	0
0	0	0	0	0	0	0	0	0	0	0
0	0	0	0	0	0	0	0	0	0	0
0	0	0	0	0	0	0	0	0	0	0

10	7	9	5	10	10	4	6	5	10	4
9	7	9	5	8	10	0	6	5	9	4
8	6	9	4	6	0	0	6	5	9	4
0	0	0	0	0	0	0	0	0	0	0
0	0	0	0	0	0	0	0	0	0	0
0	0	0	0	0	0	0	0	0	0	0

Exemplo Navio 3 – com estabilidade

10	7	9	5	10	10	9	6	5	10	7
9	7	9	5	8	10	9	6	5	9	6
8	6	9	5	6	10	8	6	5	9	6
0	0	0	0	0	0	0	0	0	0	0
0	0	0	0	0	0	0	0	0	0	0
0	0	0	0	0	0	0	0	0	0	0

10	7	9	10	10	10	9	6	8	10	7
9	7	9	10	8	10	9	6	8	9	6
8	6	9	9	6	10	8	6	8	9	6
8	0	7	0	0	9	8	0	0	9	6
0	0	0	0	0	0	0	0	0	0	0
0	0	0	0	0	0	0	0	0	0	0

10	7	9	10	10	10	9	9	8	10	7
9	7	9	10	8	10	9	9	8	9	7
8	7	9	9	8	10	8	9	8	9	7
8	7	7	9	7	9	8	8	8	9	0
0	0	0	0	0	0	0	0	0	0	0
0	0	0	0	0	0	0	0	0	0	0

Exemplo Navio 3 – com estabilidade

10	9	9	10	10	10	9	9	8	10	10
9	9	9	10	8	10	9	9	8	9	10
8	9	9	9	8	10	8	9	8	9	0
8	9	9	9	0	9	8	8	8	9	0
8	0	8	0	0	8	0	0	8	8	0
0	0	0	0	0	0	0	0	0	0	0

10	9	9	10	10	10	9	9	10	10	10
9	9	9	10	10	10	9	9	10	9	10
9	9	9	9	10	10	9	9	10	9	10
9	9	9	9	9	9	9	0	0	9	9
0	0	0	0	0	0	0	0	0	0	0
0	0	0	0	0	0	0	0	0	0	0

10	10	10	10	10	10	10	10	10	10	10
10	10	0	10	10	10	10	10	10	10	10
0	0	0	10	10	10	0	0	10	10	10
0	0	0	0	0	0	0	0	0	0	0
0	0	0	0	0	0	0	0	0	0	0
0	0	0	0	0	0	0	0	0	0	0

Modelo Navio Sozinho – exemplo 3

9	0	0	0	7	0	10	0	0	6	0
5	0	0	0	5	0	0	0	0	6	0
5	0	0	0	0	0	0	0	0	0	0
4	0	0	0	0	0	0	0	0	0	0
4	0	0	0	0	0	0	0	0	0	0
4	0	0	0	0	0	0	0	0	0	0

9	0	0	0	7	0	10	7	10	6	9
5	0	0	0	5	0	9	0	0	6	9
5	0	0	0	5	0	0	0	0	0	0
4	0	0	0	5	0	0	0	0	0	0
4	0	0	0	3	0	0	0	0	0	0
4	0	0	0	0	0	0	0	0	0	0

9	4	8	10	7	8	10	7	10	6	9
5	0	0	10	5	0	9	0	10	6	9
5	0	0	0	5	0	6	0	0	0	9
4	0	0	0	5	0	0	0	0	0	9
4	0	0	0	4	0	0	0	0	0	6
4	0	0	0	0	0	0	0	0	0	6

9	0	8	10	7	8	10	7	10	6	9
5	0	0	10	5	8	9	0	10	6	9
5	0	0	10	5	0	6	0	9	6	9
0	0	0	7	5	0	0	0	9	6	9
0	0	0	0	0	0	0	0	0	5	6
0	0	0	0	0	0	0	0	0	0	6

Modelo Navio Sozinho – exemplo 3

9	10	8	10	7	8	10	7	10	6	9
9	10	0	10	0	8	9	0	10	6	9
9	8	0	10	0	8	6	0	9	6	9
9	0	0	7	0	8	0	0	9	6	9
8	0	0	7	0	8	0	0	0	6	6
0	0	0	0	0	0	0	0	0	0	6

9	10	8	10	7	8	10	7	10	9	9
9	10	0	10	0	8	9	0	10	7	9
9	8	0	10	0	8	9	0	9	7	9
9	8	0	7	0	8	9	0	9	7	9
8	8	0	7	0	8	0	0	9	7	0
8	0	0	7	0	0	0	0	0	0	0

9	10	8	10	10	8	10	8	10	9	9
9	10	0	10	10	8	9	0	10	9	9
9	8	0	10	0	8	9	0	9	9	9
9	8	0	8	0	8	9	0	9	9	9
8	8	0	8	0	8	9	0	9	9	8
8	0	0	8	0	0	0	0	0	0	0

Modelo Navio Sozinho – exemplo 3

9	10	10	10	10	10	10	0	10	9	9
9	10	0	10	10	10	9	0	10	9	9
9	0	0	10	10	9	9	0	9	9	9
9	0	0	9	10	0	9	0	9	9	9
9	0	0	9	10	0	9	0	9	9	0
0	0	0	9	0	0	0	0	0	9	0

0	10	10	10	10	10	10	0	10	10	10
0	10	0	10	10	10	0	0	10	0	10
0	0	0	10	10	10	0	0	0	0	10
0	0	0	0	10	10	0	0	0	0	10
0	0	0	0	10	10	0	0	0	0	10
0	0	0	0	0	10	0	0	0	0	10

Modelo integrado: sem estabilidade

7	5	4	6	9	0	0	0	0	10	5
0	0	4	6	0	0	0	0	0	0	5
0	0	0	4	0	0	0	0	0	0	0
0	0	0	0	0	0	0	0	0	0	0
0	0	0	0	0	0	0	0	0	0	0
0	0	0	0	0	0	0	0	0	0	0

7	5	4	6	9	0	10	9	0	10	5
7	0	4	6	0	0	0	9	0	3	5
0	0	0	4	0	0	0	9	0	0	5
0	0	0	0	0	0	0	0	0	0	5
0	0	0	0	0	0	0	0	0	0	0
0	0	0	0	0	0	0	0	0	0	0

7	5	4	6	9	4	10	9	0	10	5
7	4	4	6	9	0	10	9	0	10	5
6	0	0	4	9	0	10	9	0	0	5
6	0	0	0	0	0	0	8	0	0	5
6	0	0	0	0	0	0	8	0	0	0
0	0	0	0	0	0	0	0	0	0	0

Modelo integrado: sem estabilidade

7	5	0	6	9	6	10	9	9	10	5
7	0	0	6	9	0	10	9	0	10	5
6	0	0	6	9	0	10	9	0	10	5
6	0	0	0	9	0	0	8	0	8	5
6	0	0	0	7	0	0	8	0	0	5
0	0	0	0	0	0	0	0	0	0	0

7	8	10	6	9	6	10	9	9	10	10
7	0	9	6	9	6	10	9	0	10	9
6	0	0	6	9	0	10	9	0	10	9
6	0	0	0	9	0	8	8	0	8	8
6	0	0	0	7	0	0	8	0	0	8
0	0	0	0	7	0	0	8	0	0	0

7	8	10	9	9	7	10	9	9	10	10
7	8	9	9	9	0	10	9	9	10	9
7	8	0	9	9	0	10	9	0	10	9
7	7	0	0	9	0	8	8	0	8	8
0	0	0	0	7	0	7	8	0	8	8
0	0	0	0	7	0	0	8	0	0	0

Modelo integrado: sem estabilidade

9	8	10	9	9	10	10	9	9	10	10
9	8	9	9	9	10	10	9	9	10	9
9	8	0	9	9	0	10	9	0	10	9
9	0	0	8	9	0	8	8	0	8	8
0	0	0	8	9	0	0	8	0	8	8
0	0	0	0	8	0	0	8	0	8	8

9	10	10	9	9	10	10	9	9	10	10
9	10	9	9	9	10	10	9	9	10	9
9	9	0	9	9	10	10	9	0	10	9
9	0	0	0	9	10	10	0	0	10	0
9	0	0	0	9	9	0	0	0	9	0
0	0	0	0	9	0	0	0	0	9	0

0	10	10	10	10	10	10	10	10	10	10
0	10	0	0	10	10	10	10	0	10	0
0	10	0	0	0	10	10	10	0	10	0
0	0	0	0	0	10	10	0	0	10	0
0	0	0	0	0	10	0	0	0	10	0
0	0	0	0	0	0	0	0	0	10	0