Advanced Machine Learning for Imaging and Vision

A.Y. 2025/2026

Lab 1: Computational imaging with neural networks

Lab duration: 9h

*Report due before **March 31st h23.59**. Late reports will not be graded.*
Report must be uploaded to "Portale della Didattica", "Elaborati" section as a group_n.zip file with report.pdf and code.ipynb as exported from Google Colab.
This lab is worth up to 3 points.

Download the starting notebooks from Portale della Didattica.

Exercise 1 – Image denoising

In this exercise, you will implement, train and test a DnCNN neural network to remove additive white Gaussian noise from grayscale images. The BSD400 dataset of grayscale images is provided for training, while the Set12 of famous images is provided for testing.

Training requires performing the following operations:

- extract random image patches since training is performed on image patches, not full images. A patch is a crop of fixed size such as 32x32 in a random spatial position. For each minibatch, you will load a subset of the images and from each extract a random patch;
- make the patch noisy. You will need to simulate the noise corrupting the clean version of the patch. The noise model is additive white Gaussian with standard deviation of 25. Keep the clean patch as well as you will need it for training!
- provide the noisy patches to the neural network model which will return an estimate of the clean patch. Use mean squared error as cost function and train.

You will need to implement a shortened version of DnCNN (only use 8 Conv-BN-Relu blocks instead of 20) to limit computational complexity and training times. Remember to use the residual trick which allows the network to estimate the noise instead of directly the clean image.

Some clean test images are provided. Test the model on them by adding Gaussian noise with standard deviation equal to 25. You can provide the full test image as input to

the network, no need to split it into patches (N.B.: the network is fully-convolutional, which means it can process inputs of any spatial size).

Compute the PSNR of noisy test image with respect to its clean version and then compute the PSNR of the denoised image with respect to the clean one. Try to beat 29 dB as the average PSNR over the entire test set. For an image with values on [0,255], PSNR is defined as:

$$PSNR_{dB} = 10log_{10}\frac{255^2}{MSE}$$

being MSE the mean squared error ($\frac{1}{HW}\sum_i \ (\hat{x}_i - x_i)^2$)

Repeat the experiment by rewriting the neural network without the residual trick. What is now the performance like?

Test the pretrained network with the residual trick on test images where the noise has standard deviation equal to 10 and to 50 and report the resulting PSNRs.

Now train a new DnCNN where the dataloader chooses the standard deviation uniformly at random in the [10,50] interval instead of fixing it to 25, for each batch item (this is called blind training). Test it on test images with standard deviations 10, 25, 50.

Your report should include a description of the implementation of the neural network and training procedure, the results obtained with fixed standard deviation equal to 25 with and without the residual trick, the results obtained by testing on the mismatched noise standard deviation and the results of the blind training experiment.

Exercise 2 – Satellite Image Super-Resolution

In this exercise you will implement a neural network to super-resolve satellite images by a factor of 4. You are provided a dataset of RGB images with 400 training scenes and 20 testing scenes. For each scene you have a low-resolution (LR) image of size 121x121 pixels and a high-resolution image of size 484x484 pixels.

You will train a neural network to estimate an HR image from the LR input. Training requires to crop a 64x64 patch from the LR image and the 256x256 patch at the corresponding location from the HR image. Use the L1 loss as training cost.

The neural network to be implemented is the one shown in the following figure. It is a modified and simplified version of RCAN (Residual Channel Attention Network). Note the residual connection from input to output where the LR image is upscaled with a bicubic interpolator.

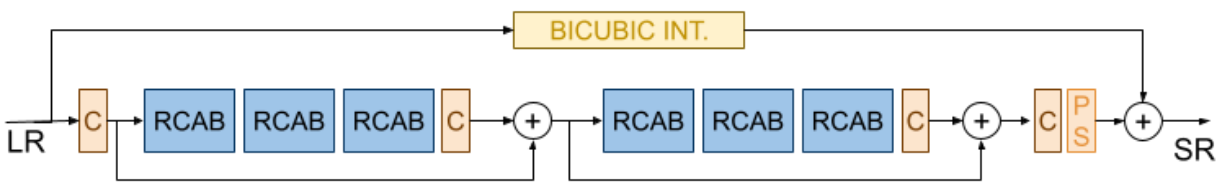

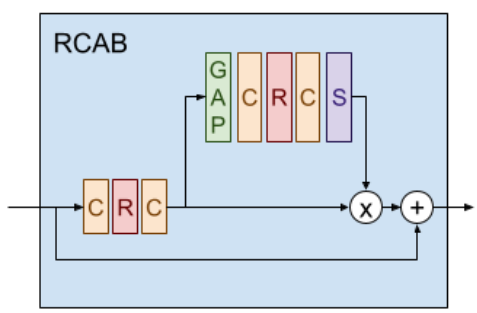

C: Conv2D
R: ReLU
S: Sigmoid
GAP: Global Average Pool
PS: Pixel Shuffling

Your report should include a description of the implementation of the neural network and training procedure, and the results obtained including the PSNR on the test set.