REV	ZONE	ECN	DESCRIPTION OF REVISION	CK APPD / DATE	ENG APPD / DATE

REVISION HISTORY

V5.0	1/4/96
All sheets	ORIGINAL VERSION

v5.0 to v1.0b	2/15/96
Sheet 3	Micro-channel conn. symbol updated to show proper notch placement. Changed AUD_HMSND to AGND on Sacto conn. (pin 4) Moved CTXM from pin 80 to pin 100 on Sacto conn. Added GNDs on Sacto conn. (pins 101 and 102). Added Port A SDC signals to Sacramento connector: pin 105 - SDC_PORTA_EN# pin 107 - DrDA pin 108 - PrDA pin 109 - INTRA* pin 110 - CTSA* pin 111 - DTRA* pin 112 - DCDA*
	Changed pin 68 on Sacto conn. from +5V_SENSE to TRICKLE+5.
Sheet 4	Changed to new MEMCjr symbol with 4 new pins for WLCD support: BRC - not connected. Pulled up internally in MEMCjr. BCE - not connected EDA24# - not connected CER24# - not connected
Sheet 6	Changed DP4M SRAM socket from low profile (517-0822) to vertical (517-0711).
Sheet 9	SPI_MODEM signal into PrimeTime changed to DCDA*
Sheet 11	SDC Port A signals routed to Sacto conn.: Pin 4 of DS1552 (port A) changed from HPU to SDC_PORTA_EN# so device outputs can be tri-stated when a MODEM is in Sacto conn. SPI_MODEM signal name changed to DCDA* DCDA* disconnected from port B 26LS32. Changed SCC Port A (MODEM) comp. from 8-pin to 9-pin (517-0784) Add 47pF cap to SCC Port A (MODEM) conn. power pin
Sheet 12	Pull-down res. on SYS_WAKEUP changed from 4.7K to 100k, for compatibility with MODEM supported in Sacto conn. 4.7K pull-up routed to R47* signal out of Quda.
Sheet 13	470 ohm series resistor added to INTMIC input of DFAC2. Added ESD protection for rear headphone jack. Disabled spare Op Amps. Changed AUD_HMSND to AGND in MODEM audio circuitry. Changed pull-ups on SCLK and SDATA (DFAC2) from 4.7K to 2.2K. Added ESD protection for common pin of microphone jack.

v1.0b to v1.0c	3/19/96
Sheet 2	RP1 pins re-assigned to simplify layout Changed clock gen. from MC88P118 (1568002) to MC88P20 (1768002-1) Removed 74F112 clock solution and routed 2 ohm select R's Disconnected Sys_Reset* from pin 22 of MC88P20 because of PLL lock issue which caused Sys_Reset* to be asserted erroneously Changed select R at RD1 of 1K0 from 330 to 300 ohms for BOM consolidation Added two zero ohm resistors to select SCSI clock for 53MHz systems Changed pull-down resistor on PCLK from 1K0 to 649 ohms to 96.8 ohms
Sheet 3	RP2 and RP6 pins re-assigned to simplify layout RP8, number on BOM(347-0111) removed
Sheet 4	RP5, RP8, RP7, RP6 pins re-assigned to simplify layout
Sheet 7	Simplified Gazelle speed select and CPUID select Added 74F244 for additional ribbon of CPUID Changed resistor divider on one of TIMIO, resistors from 510 and 1.0K to 511 (1%) and 1.0K for BOM consolidation
Sheet 8	Added 74F00 and 74F74 to delay SCIO from MEMCjr into PrimeTime This fixes PrimeTime bug where two bus grants are generated simultaneously
Sheet 10	Changed clock clip to SSC98 from SCB2 to SCSI_CK Added 220pF/68.6 ohm clock termination at SSC98 for SCSI_Clk
Sheet 11	Changed ribbon port mini-DIN conn. from 517-0645 to 517-0715 (swap-in) Corrected cap on +5VFF filter pin 6 of MODEM port from series to decoupling
Sheet 12	Removed 4.7K pull-up on RST* Changed 4-pin DIN connector from 517-0645 to 517-0715 (swap-in) Reset implementation changed to use Fast Reset clip of Quda for MEMCjr reset, and PC3 (RST*) out for Sys_Reset*. Changed pullup on Sys_Reset* from 47k to 1K Added a 2K pull-up to Fast_Reset* Changed bypass cap on ADBI from 330pF to 470pF for BOM consolidation
Sheet 13	Changed summing R's for CD sound from 5.6K to 4.7K for BOM consolidation Moved protection diode on MIC+ to DFAC2 side of network Moved ESD protection directly on headphone jack to DFAC2 side of LPAK Removed four EMI caps on DFAC2 side of microphone jack LPAK
Sheet 14	Added 2-pin connector (516-0270) for second fan
Sheet 15	Test points added

v1.0 to v2.0	4/29/96
Sheet 2	Changed series resistor on BCK3 from 0 ohms to 47 ohms Added part number for 25MHz 08LC048 (1327-0001) Changed pull-down resistor on PCIK from 96.8 ohms to 10.0 ohms
Sheet 3	Logic added to cause reset to be asserted at slots during Restart Part number assigned for 110-pin Micro-channel connector
Sheet 6	Part numbers assigned for PGM: 341-0190 for Hi word, 341-0189 for Lo word
Sheet 7	Changed series resistor on Ext_Clk from 0 ohms to 47 ohms Part number 348-1081 assigned to Gazelle Series resistor removed on CKBYN#
Sheet 9	600 ohm/1000pF termination added on BR_SLOT, BR_BACK0, and BGACK at PrimeTime
Sheet 10	0.01 uF caps added to BAT_IN and TRICKLE+5 for EMI Part number assigned for alkaline battery connector
Sheet 13	Headphone jack: part number changed from 515-0493 to 515-0815 (swap-in) Microphone jack part number changed from 515-0822 to 515-0404 (sheilding)
Sheet 14	op-amp chip part number changed from 855-0493 to 855-0495 0.001uF caps added to HPOUTR, HPOUTL, headphone return, +5V, and -5V for EMI
Sheet 15	TP136 (SCBYNC) was removed The following test points were added: TP246 (MEMCjR_TEST) TP247 (PT_TRST*), TP248 (ATSTOUT), TP249 (ATSTIN), TP250 (PT_BGACK*), TP251 (PT_BRSACT0*), TP252 (PT_BRSLOT*), TP253 (RST), TP254 (PST_LED)

V2.0 to V3.0	4/30/96
none	PCB changes only

V3.0 to V4.0	5/12/96
Sheet 3	Part number 513-0210 assigned for 110-pin micro-channel conn Pin 4 on Sacramento slot redefined from AGND to MIC_to_MODEM for speaker phone
Sheet 7	CPUID is connected to monitor IDs through a zero ohm resistor. The pull-up/pull-down shifting option remains in case 640x480 is supported in the Slice enclosure. The CPUID was redefined as: 0= Slice and 1=Hook. Filter resistor on Gazelle_DVEB changed from 5.6 to 6.8 ohms (1015-6680) Filter resistor on Gazelle_AVDD changed from 10 to 33 ohms (1015-1331)
Sheet 10	Alkaline battery connector part number assigned as 515-1708
Sheet 13	Spare Op-amp configured to amplify internal microphone sound in to Sacramento slot to support future speaker phone option.

* 605-0599 ~ change spare clip pin
* BOM change for CPS (Only on V5.0)
* ~~spare clip pin change~~

Optimus EVT1 Logic Board Schematic

1) Table of Contents

PROCESSOR BUS
2) Processor & Clock
3) I/O Expansion Slot and Sacramento

MAIN MEMORY SUBSYSTEM
4) MEMCjr
5) DRAM & ROM (soldered and SIMMs)

VIDEO SUBSYSTEM
6) VRAM SIMM
7) Video Clock Generator and CPUID Register
8) CLUT/DAC

I/O SUBSYSTEM
9) PrimeTime
10) SCSI
11) Serial Ports
12) CUDA, ADB Port, & Power

SOUND SUBSYSTEM
13) Sound Input & Sound Output

MISCELLANEOUS
14) Internal SCSI, Floppy, Video, Audio, Power (Foxconn) connector and second fan connector
15) Test Points and Ground Clips

Table of Contents/Revision History

DIMENSIONS ARE IN MILLIMETERS
X.X± ____
X.XX± ____
X.XXX± ____
ANGLES± ____
DO NOT SCALE DRAWINGS

THIRD ANGLE PROJECTION

ECS CAD GENERATED

METRIC

DRAFTER	/	DESIGN CK	/
ENG APPD	/	MFG APPD	/
QA APPD	/	DESIGNER	/
RELEASE	/	SCALE	

MATERIAL/FINISH NOTED AS APPLICABLE

SIZE D

Apple Computer, Inc

NOTICE OF PROPRIETARY PROPERTY
THE INFORMATION CONTAINED HEREIN IS THE PROPRIETARY PROPERTY OF APPLE COMPUTER, INC. THE POSSESSOR AGREES TO THE FOLLOWING
(I) TO MAINTAIN THE DOCUMENT IN CONFIDENCE
(II) NOT TO REPRODUCE OR COPY IT
(III) NOT TO REVEAL OR PUBLISH IT IN WHOLE OR PART

TITLE
OPTIMUS_V41

DRAWING NUMBER

REV.

SHT 1 OF 15

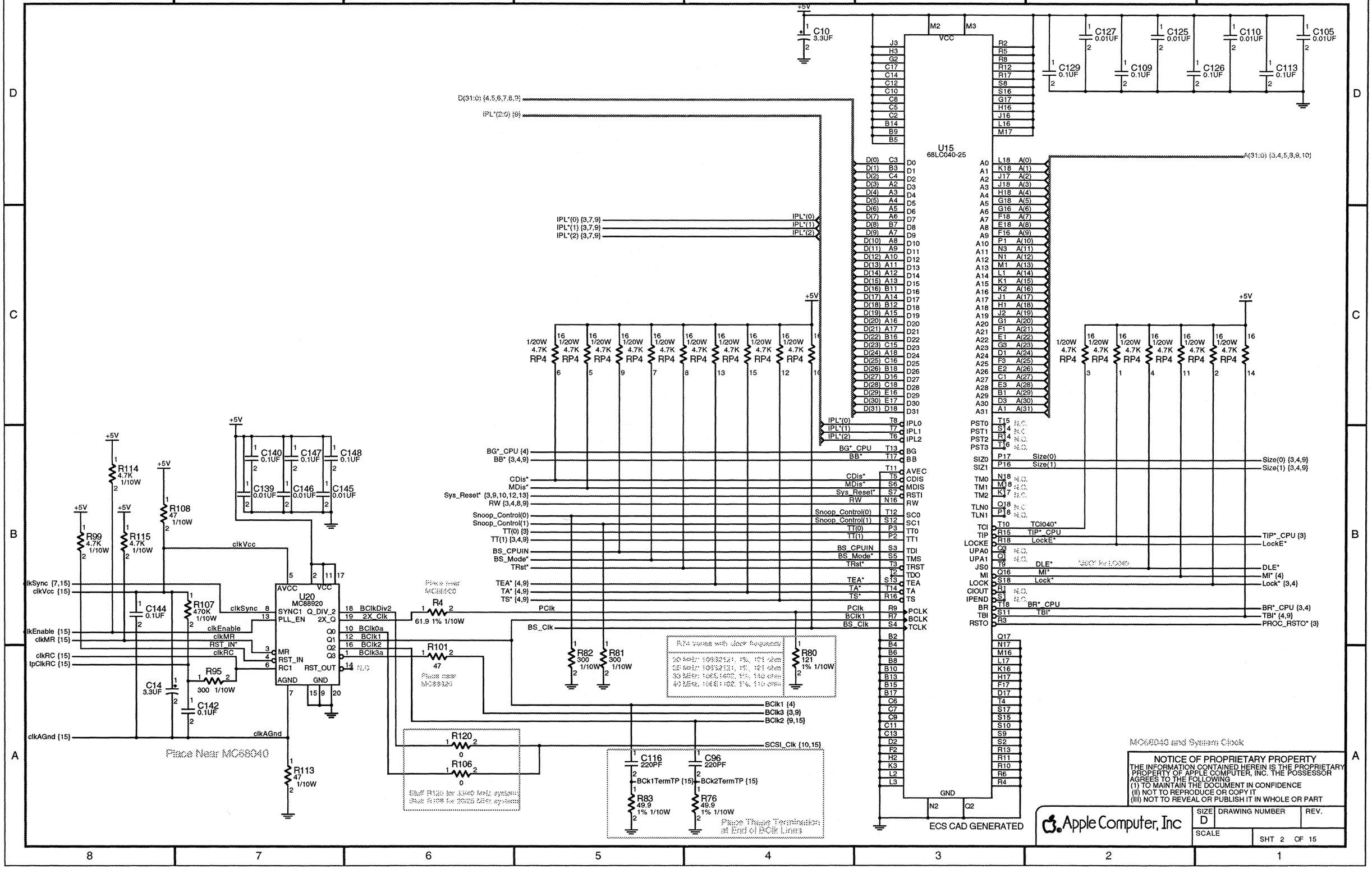

NOTICE OF PROPRIETARY PROPERTY
THE INFORMATION CONTAINED HEREIN IS THE PROPRIETARY PROPERTY OF APPLE COMPUTER, INC. THE POSSESSOR AGREES TO THE FOLLOWING
(I) TO MAINTAIN THE DOCUMENT IN CONFIDENCE
(II) NOT TO REPRODUCE OR COPY IT
(III) NOT TO REVEAL OR PUBLISH IT IN WHOLE OR PART

Apple Computer, Inc

SIZE	DRAWING NUMBER	REV.
D		
SCALE	SHT 2 OF 15	

LC Family Expansion Slot

EXPERIMENTO EXPANSION OPTION

J8 +12V

A1		A2E_SOUND {13}
A2		SLOTE_IRQ* {9}
A3		PDS_AS* {9}
A4		DSACK1* {9}
A5		HALT* {9}
A6		FC2
A7		FC0
A8		Lock* {2,4}
A9	IOD(31)	
A10	IOD(28)	
A11	IOD(25)	
A12	IOD(22)	
A13	IOD(19)	
A14	IOD(16)	
A15	IOD(13)	
A16	IOD(10)	
A17		BGACK* {9}
A18		IOA(1) {9,11}
A19	A(26)	
A20	A(23)	
A21	A(20)	
A22		IPL*(0) {2,7,9}
A23	IOD(2)	
A24	IOD(1)	
A25	A(4)	
A26	A(6)	
A27	A(11)	
A28	A(9)	
A29	A(16)	
A30	A(18)	
A31	N.C. (unspec)	
A32		
A33		
A34		
A35	A(28)	
A36	A(29)	
A37		CIOUT_SLOT*
A38		CBACK_SLOT*
A39		
A40		

J8 +5V

B1		
B2		RW {2,4,8,9}
B3		
B4		
B5		IOSIZE(1) {9}
B6		
B7		C16M {9}
B8		
B9	IOD(30)	
B10	IOD(27)	
B11	IOD(24)	
B12	IOD(21)	
B13	IOD(18)	
B14	IOD(15)	
B15	IOD(12)	
B16	IOD(9)	
B17		
B18	A(31)	BR_SLOT* {9}
B19	A(25)	
B20	A(22)	
B21		IPL*(2) {2,7,9}
B22	IOD(3)	
B23	IOD(5)	
B24	IOD(0)	
B25	A(2)	
B26	A(12)	
B27	A(13)	
B28	A(8)	
B29	A(15)	
B30	A(17)	
B31		Master16 {9}
B32		
B33		
B34		
B35		BG_SLOT* {9}
B36		
B37		CPU_AS* {9}
B38		
B39		DSACK0* {9}
B40		

J8

C1		FPU_SEL*
C2		DS* {9}
C3		BERR* {9}
C4		DSACK0* {9}
C5		IOSIZE(0) {9}
C6		FC1
C7		RST_EXP*
C8		BG_SLOT* {9}
C9	IOD(29)	
C10	IOD(26)	
C11	IOD(23)	
C12	IOD(20)	
C13	IOD(17)	
C14	IOD(14)	
C15	IOD(11)	
C16	IOD(8)	
C17		
C18	A(27)	IOA(0) {9}
C19	A(24)	
C20	A(21)	
C21		IPL*(1) {2,7,9}
C22	IOD(4)	
C23	IOD(6)	
C24	IOD(7)	
C25	A(3)	
C26	A(5)	
C27	A(7)	
C28	A(10)	
C29	A(14)	
C30	A(19)	
C31		FC3 {9}
C32	MINUS5V	
C33		
C34		
C35		C16M {9}
C36	A(30)	
C37		STERM* {9}
C38		CBREQ_SLOT*
C39		
C40		DSACK1* {9}

Sys_Reset* {2,9,10,12,13} → U33 (74F00) pins 10, 9 → 8 RST_EXP → U33 (74F00) pins 13, 12 → 11 RE → R74 2 47 1/10W → RST_EXP*

IOD{31:0} {9,10,11}
A{31:0} {2,4,5,8,9,10}

J9 +5V

AUD_MtoH {13}	1	2		AUD_HtoM {13}
AUD_MHGND {13}	3	4		MIC_TO_MODEM {13,15}
RW {2,4,8,9}	5	6		DS* {9}
BERR* {9}	7	8		DSACK1* {9}
DSACK0* {9}	9	10		
IOSIZE(0) {9}	11	12		C16M {9}
IOSIZE(1) {9}	13	14		
	15	16		BG_SACTO* {9}
IOD(31)	17	18	IOD(30)	
IOD(29)	19	20	IOD(28)	
IOD(27)	21	22	IOD(26)	
IOD(25)	23	24	IOD(24)	
IOD(23)	25	26	IOD(22)	
	27	28	IOD(21)	
IOD(20)	29	30	IOD(19)	
IOD(18)	31	32	IOD(17)	
IOD(16)	33	34	IOD(15)	
IOD(14)	35	36	IOD(13)	
IOD(12)	37	38	IOD(11)	
IOD(10)	39	40	IOD(9)	
IOD(8)	41	42		
IOD(7)	43	44	IOD(6)	
IOD(5)	45	46	IOD(4)	
IOD(3)	47	48	IOD(2)	
IOD(1)	49	50	IOD(0)	
	51	52		
BGACK* {9}	53	54		BR_SACTO* {9}
IO_CS_TIMED* {9}	55	56		IO_CS_DSACK* {9}
	57	58		SACTO_IRQ* {9,10}
IOA(1) {9,11}	59	60		IOA(0) {9}
A(2)	61	62	A(3)	
A(4)	63	64	A(5)	
A(6)	65	66	A(7)	
A(8)	67	68	A(9)	
A(10)	69	70	A(11)	
A(12)	71	72	A(14)	
A(13)	73	74	A(16)	
A(15)	75	76	A(18)	
A(17)	77	78	A(20)	
A(19)	79	80	A(22)	
A(21)	81	82	A(24)	
A(23)	83	84	A(25)	
	85	86	A(27)	
A(26)	87	88	A(29)	
A(28)	89	90	A(31)	
A(30)	91	92		
CPU_AS* {9}	93	94		
TRICKLE+5 {12,14}	95	96		SYS_WAKEUP {12}
BClk3 {2,9}	97	98	MINUS5V	
+12V	99	100		C32M {7,9}
	101	102		
	103	104		
SCC_PORTA_ENB {11}	105	106		
TxDA {11}	107	108		RxDA {11}
RTSA* {11}	109	110		CTSA* {11}
DTRA* {11}	111	112		DCDA* {9,11}

+5V → RP3 1/20W 4.7K (16 → 15 … 1)

FC0	
FC2	
SCC_PORTA_ENB {11}	
BR_SACTO* {9}	
TT(1) {2,4,9}	
RW {2,4,8,9}	
Size(0) {2,4,9}	
Size(1) {2,4,9}	
TT(0) {2}	
BB* {2,4,9}	
BR*_IO {4,9,15}	
BR*_CPU {2,4}	
TIP*_CPU {2}	

+5V → RP2 1/20W 4.7K (16 → 15 … 1)

HALT* {9}	
DSACK0* {9}	
CBREQ_SLOT*	
PDS_AS* {9}	
DS* {9}	
Master16 {9}	
STERM* {9}	
CPU_AS* {9}	
FPU_SEL*	
SLOTE_IRQ* {9}	
BERR* {9}	
DSACK1* {9}	
CBACK_SLOT*	
BR_SLOT* {9}	
BGACK* {9}	

FC1 → R71 1 2 300 1/10W

CIOUT_SLOT* → R121 1 2 300 1/10W

+5V → R85 1K 1/10W, R86 1K 1/10W, R87 1K 1/10W

IPL*(2) {2,7,9}
IPL*(1) {2,7,9}
IPL*(0) {2,7,9}

I/O Expansion Slot and SACRAMENTO

NOTICE OF PROPRIETARY PROPERTY
THE INFORMATION CONTAINED HEREIN IS THE PROPRIETARY PROPERTY OF APPLE COMPUTER, INC. THE POSSESSOR AGREES TO THE FOLLOWING
(I) TO MAINTAIN THE DOCUMENT IN CONFIDENCE
(II) NOT TO REPRODUCE OR COPY IT
(III) NOT TO REVEAL OR PUBLISH IT IN WHOLE OR PART

ECS CAD GENERATED

Apple Computer, Inc

SIZE	DRAWING NUMBER	REV.
D		
SCALE	SHT 3 OF 15	

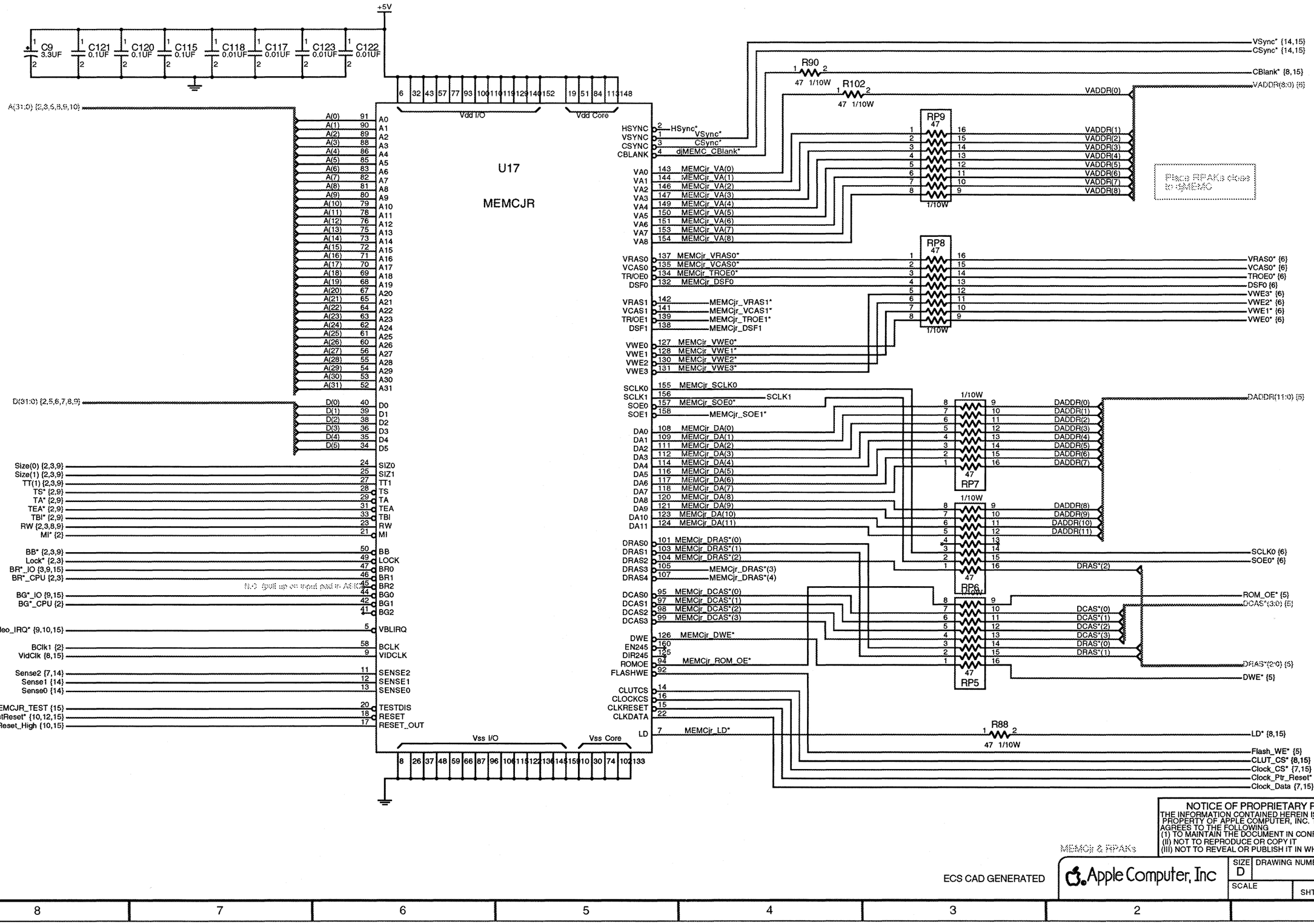
+5V
C9 3.3UF
C121 0.1UF
C120 0.1UF
C115 0.1UF
C118 0.01UF
C117 0.01UF
C123 0.01UF
C122 0.01UF
6 32 43 57 77 93 100 110 119 129 140 152
Vdd I/O
19 51 84 113 148
Vdd Core
U17
MEMCJR
A(31:0) {2,3,5,8,9,10}
D(31:0) {2,5,6,7,8,9}
Size(0) {2,3,9}
Size(1) {2,3,9}
TT(1) {2,3,9}
TS* {2,9}
TA* {2,9}
TEA* {2,9}
TBI* {2,9}
RW {2,3,8,9}
MI* {2}
BB* {2,3,9}
Lock* {2,3}
BR*_IO {3,9,15}
BR*_CPU {2,3}
BG*_IO {9,15}
BG*_CPU {2}
Video_IRQ* {9,10,15}
BClk1 {2}
VidClk {8,15}
Sense2 {7,14}
Sense1 {14}
Sense0 {14}
MEMCJR_TEST {15}
FastReset* {10,12,15}
Reset_High {10,15}
Vss I/O
8 26 37 48 59 66 87 96 106 115 122 136 145 159
Vss Core
10 30 74 102 133
HSYNC
VSYNC
CSYNC
CBLANK
HSync*
VSync*
CSync*
djMEMC_CBlank*
R90 47 1/10W
R102 47 1/10W
VSync* {14,15}
CSync* {14,15}
CBlank* {8,15}
VADDR(8:0) {5}
RP9 47 1/10W
RP8 47 1/10W
RP7 47 1/10W
RP6 47 1/10W
RP5 47 1/10W
R88 47 1/10W
Place RPAKs close to U9MEMC
MEMCjr_VA(0)
MEMCjr_VA(1)
MEMCjr_VA(2)
MEMCjr_VA(3)
MEMCjr_VA(4)
MEMCjr_VA(5)
MEMCjr_VA(6)
MEMCjr_VA(7)
MEMCjr_VA(8)
VADDR(0)
VADDR(1)
VADDR(2)
VADDR(3)
VADDR(4)
VADDR(5)
VADDR(6)
VADDR(7)
VADDR(8)
MEMCjr_VRAS0*
MEMCjr_VCAS0*
MEMCjr_TROE0*
MEMCjr_DSF0
MEMCjr_VRAS1*
MEMCjr_VCAS1*
MEMCjr_TROE1*
MEMCjr_DSF1
VRAS0* {6}
VCAS0* {6}
TROE0* {6}
DSF0 {6}
VWE3* {6}
VWE2* {6}
VWE1* {6}
VWE0* {6}
MEMCjr_VWE0*
MEMCjr_VWE1*
MEMCjr_VWE2*
MEMCjr_VWE3*
MEMCjr_SCLK0
SCLK1
MEMCjr_SOE0*
MEMCjr_SOE1*
SCLK0 {6}
SOE0* {6}
MEMCjr_DA(0)
MEMCjr_DA(1)
MEMCjr_DA(2)
MEMCjr_DA(3)
MEMCjr_DA(4)
MEMCjr_DA(5)
MEMCjr_DA(6)
MEMCjr_DA(7)
MEMCjr_DA(8)
MEMCjr_DA(9)
MEMCjr_DA(10)
MEMCjr_DA(11)
DADDR(0)
DADDR(1)
DADDR(2)
DADDR(3)
DADDR(4)
DADDR(5)
DADDR(6)
DADDR(7)
DADDR(8)
DADDR(9)
DADDR(10)
DADDR(11)
DADDR(11:0) {5}
MEMCjr_DRAS*(0)
MEMCjr_DRAS*(1)
MEMCjr_DRAS*(2)
MEMCjr_DRAS*(3)
MEMCjr_DRAS*(4)
DRAS*(2)
DRAS*(1)
DRAS*(0)
DRAS*{2:0} {5}
MEMCjr_DCAS*(0)
MEMCjr_DCAS*(1)
MEMCjr_DCAS*(2)
MEMCjr_DCAS*(3)
DCAS*(0)
DCAS*(1)
DCAS*(2)
DCAS*(3)
DCAS*{3:0} {5}
MEMCjr_DWE*
DWE* {5}
MEMCjr_ROM_OE*
ROM_OE* {5}
MEMCjr_LD*
LD* {8,15}
Flash_WE* {5}
CLUT_CS* {8,15}
Clock_CS* {7,15}
Clock_Ptr_Reset* {7,15}
Clock_Data {7,15}
NOTICE OF PROPRIETARY PROPERTY
THE INFORMATION CONTAINED HEREIN IS THE PROPRIETARY PROPERTY OF APPLE COMPUTER, INC. THE POSSESSOR AGREES TO THE FOLLOWING
(I) TO MAINTAIN THE DOCUMENT IN CONFIDENCE
(II) NOT TO REPRODUCE OR COPY IT
(III) NOT TO REVEAL OR PUBLISH IT IN WHOLE OR PART
MEMCjr & RPAKs
ECS CAD GENERATED
Apple Computer, Inc
SIZE D
DRAWING NUMBER
REV.
SCALE
SHT 4 OF 15

D(31:0) {2,4,6,7,8,9}
DADDR(11:0) {4}

U25 DRAM-1MX4 — DADDR(0..9) A0..A9; DWE* {4} WE; DRAS*(0) {4,15} RAS; DCAS*(0) {4} CAS; VCC 13; VSS 26; IO1 D(24), IO2 D(25), IO3 D(26), IO4 D(27)

U22 DRAM-1MX4 — DADDR(0..9) A0..A9; DWE* {4} WE; DRAS*(0) {4,15} RAS; DCAS*(1) {4} CAS; VCC 13; VSS 26; IO1 D(16), IO2 D(17), IO3 D(18), IO4 D(19)

U16 DRAM-1MX4 — DADDR(0..9) A0..A9; DWE* {4} WE; DRAS*(0) {4,15} RAS; DCAS*(2) {4} CAS; VCC 13; VSS 26; IO1 D(8), IO2 D(9), IO3 D(10), IO4 D(11)

U13 DRAM-1MX4 — DADDR(0..9) A0..A9; DWE* {4} WE; DRAS*(0) {4,15} RAS; DCAS*(3) {4} CAS; VCC 13; VSS 26; IO1 D(0), IO2 D(1), IO3 D(2), IO4 D(3)

U24 DRAM-1MX4 — DADDR(0..9) A0..A9; DWE* {4} WE; DRAS*(0) {4,15} RAS; DCAS*(0) {4} CAS; VCC 13; VSS 26; IO1 D(28), IO2 D(29), IO3 D(30), IO4 D(31)

U18 DRAM-1MX4 — DADDR(0..9) A0..A9; DWE* {4} WE; DRAS*(0) {4,15} RAS; DCAS*(1) {4} CAS; VCC 13; VSS 26; IO1 D(20), IO2 D(21), IO3 D(22), IO4 D(23)

U14 DRAM-1MX4 — DADDR(0..9) A0..A9; DWE* {4} WE; DRAS*(0) {4,15} RAS; DCAS*(2) {4} CAS; VCC 13; VSS 26; IO1 D(12), IO2 D(13), IO3 D(14), IO4 D(15)

U10 DRAM-1MX4 — DADDR(0..9) A0..A9; DWE* {4} WE; DRAS*(0) {4,15} RAS; DCAS*(3) {4} CAS; VCC 13; VSS 26; IO1 D(4), IO2 D(5), IO3 D(6), IO4 D(7)

+5V

DRAM SIMM
J12

	1	2	D(0)
D(16)	3	4	D(1)
D(17)	5	6	D(2)
D(18)	7	8	D(3)
D(19)	9	10	
	11	12	DADDR(0)
DADDR(1)	13	14	DADDR(2)
DADDR(3)	15	16	DADDR(4)
DADDR(5)	17	18	DADDR(6)
DADDR(10)	19	20	D(4)
D(20)	21	22	D(5)
D(21)	23	24	D(6)
D(22)	25	26	D(7)
D(23)	27	28	DADDR(7)
DADDR(11)	29	30	
DADDR(8)	31	32	DADDR(9)
DRAS*(2)	33	34	DRAS*(1)
	35	36	
	37	38	
	39	40	DCAS*(3)
DCAS*(1)	41	42	DCAS*(0)
DCAS*(2)	43	44	DRAS*(1)
DRAS*(2)	45	46	
DWE*	47	48	
D(8)	49	50	D(24)
D(9)	51	52	D(25)
D(10)	53	54	D(26)
D(11)	55	56	D(27)
D(12)	57	58	D(28)
	59	60	D(29)
D(13)	61	62	D(30)
D(14)	63	64	D(31)
D(15)	65	66	
	67	68	
	69	70	
	71	72	

DWE* {4}
DCAS*(3:0) {4}
DRAS*(2:0) {4}
A(31:0) {2,3,4,8,9,10}

DRAM Bypass Caps

C99 0.01UF, C130 0.01UF, C162 0.01UF, C108 0.01UF

DRAM Bypass Caps

C100 0.01UF, C141 0.01UF, C149 0.01UF, C128 0.01UF

R89 4.7K 1/10W

C124 0.1UF

U35 ROM-256KX16-LO — VDD 21; A(2) A0, A(3) A1, A(4) A2, A(5) A3, A(6) A4, A(7) A5, A(8) A6, A(9) A7, A(10) A8, A(11) A9, A(12) A10, A(13) A11, A(14) A12, A(15) A13, A(16) A14, A(17) A15, A(18) A16, A(19) A17; D(0) D0, D(1) D1, D(2) D2, D(3) D3, D(4) D4, D(5) D5, D(6) D6, D(7) D7, D(8) D8, D(9) D9, D(10) D10, D(11) D11, D(12) D12, D(13) D13, D(14) D14, D(15) D15/A-1; CE_CE 10; OE 12; BYTE 31; GND 11, 30

C163 0.1UF

U34 ROM-256KX16-HI — VDD 21; A(2) A0, A(3) A1, A(4) A2, A(5) A3, A(6) A4, A(7) A5, A(8) A6, A(9) A7, A(10) A8, A(11) A9, A(12) A10, A(13) A11, A(14) A12, A(15) A13, A(16) A14, A(17) A15, A(18) A16, A(19) A17; D(16) D0, D(17) D1, D(18) D2, D(19) D3, D(20) D4, D(21) D5, D(22) D6, D(23) D7, D(24) D8, D(25) D9, D(26) D10, D(27) D11, D(28) D12, D(29) D13, D(30) D14, D(31) D15/A-1; CE_CE 10; OE 12; BYTE 31; GND 11, 30

MBROMDIS
ROM_OE* {4}

R91 300 1/10W

INSTALLATION OF ROM SIMM WILL DISABLE MOTHERBOARD ROM.
ROM SIMM MUST HAVE PIN 11 CONNECTED TO +5V
OE* on the ROM SIMM must be tied to GND

Flash_WE* {4}

ROM SIMM
J13

+5V	1	2	+12V +5V
	3	4	A(2)
A(3)	5	6	A(4)
A(5)	7	8	A(6)
A(7)	9	10	
MBROMDIS	11	12	ROM_OE* {4}
	13	14	D(0)
D(1)	15	16	D(2)
D(3)	17	18	D(4)
D(5)	19	20	D(6)
D(7)	21	22	D(8)
D(9)	23	24	D(10)
D(11)	25	26	D(12)
D(13)	27	28	D(14)
D(15)	29	30	
A(8)	31	32	A(9)
A(10)	33	34	A(11)
A(12)	35	36	A(13)
A(14)	37	38	A(15)
A(16)	39	40	A(17)
A(18)	41	42	A(19)
A(20)	43	44	A(21)
A(22)	45	46	
D(16)	47	48	D(17)
D(18)	49	50	D(19)
D(20)	51	52	D(21)
D(22)	53	54	D(23)
D(24)	55	56	D(25)
D(26)	57	58	D(27)
D(28)	59	60	D(29)
D(30)	61	62	D(31)
	63	64	

D(31:0) {2,4,6,7,8,9}

+5V

C8 47UF, C29 47UF

DRAM SIMM Bulk Bypass Caps
Place near DRAM SIMM

DRAM (updated), DRAM SIMM, ROM, & ROM SIMM

NOTICE OF PROPRIETARY PROPERTY
THE INFORMATION CONTAINED HEREIN IS THE PROPRIETARY PROPERTY OF APPLE COMPUTER, INC. THE POSSESSOR AGREES TO THE FOLLOWING
(I) TO MAINTAIN THE DOCUMENT IN CONFIDENCE
(II) NOT TO REPRODUCE OR COPY IT
(III) NOT TO REVEAL OR PUBLISH IT IN WHOLE OR PART

ECS CAD GENERATED

VIDEO RAM BANK 0

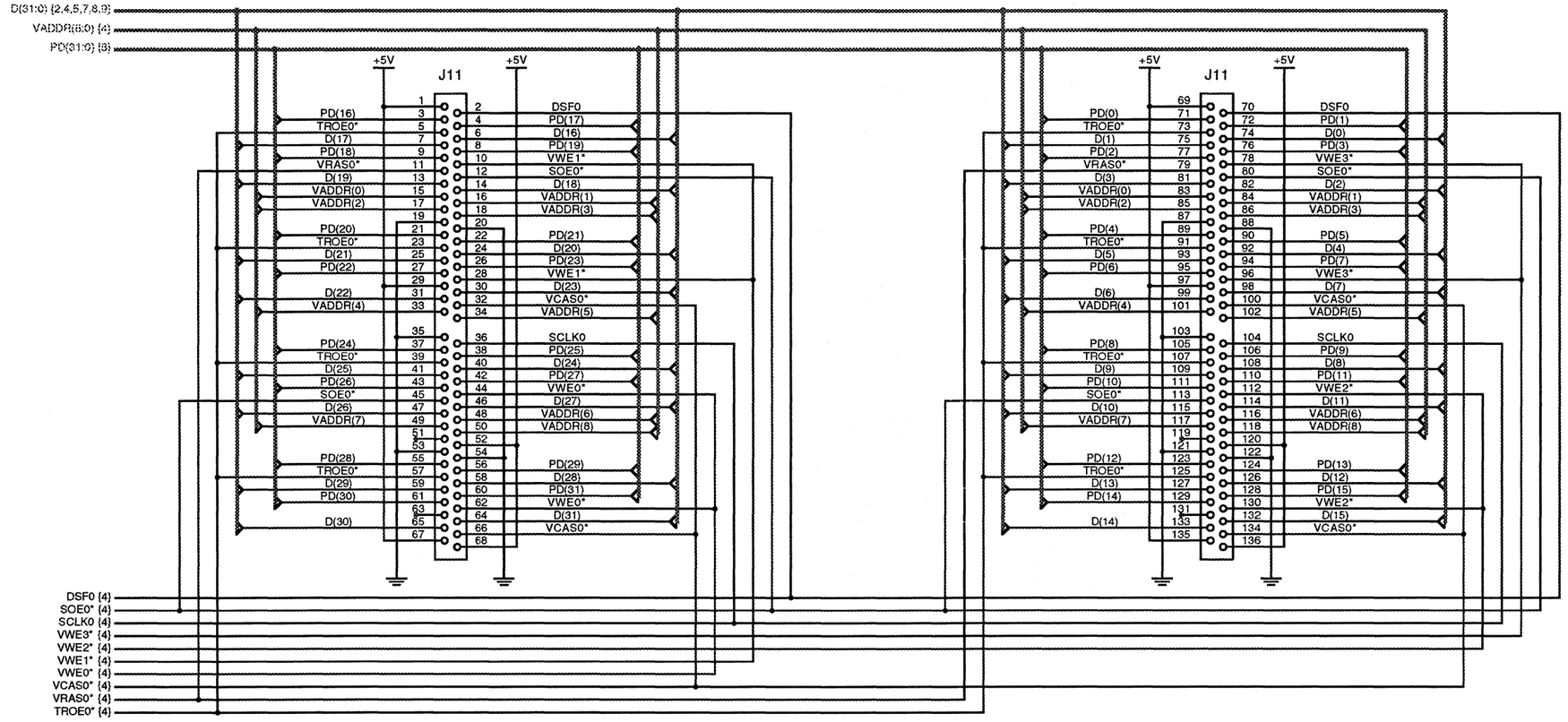

VRAM (soldered) & VRAM SIMMs

NOTICE OF PROPRIETARY PROPERTY
THE INFORMATION CONTAINED HEREIN IS THE PROPRIETARY PROPERTY OF APPLE COMPUTER, INC. THE POSSESSOR AGREES TO THE FOLLOWING
(I) TO MAINTAIN THE DOCUMENT IN CONFIDENCE
(II) NOT TO REPRODUCE OR COPY IT
(III) NOT TO REVEAL OR PUBLISH IT IN WHOLE OR PART

ECS CAD GENERATED

Apple Computer, Inc

SIZE	DRAWING NUMBER	REV.
D		
SCALE	SHT 6 OF 15	

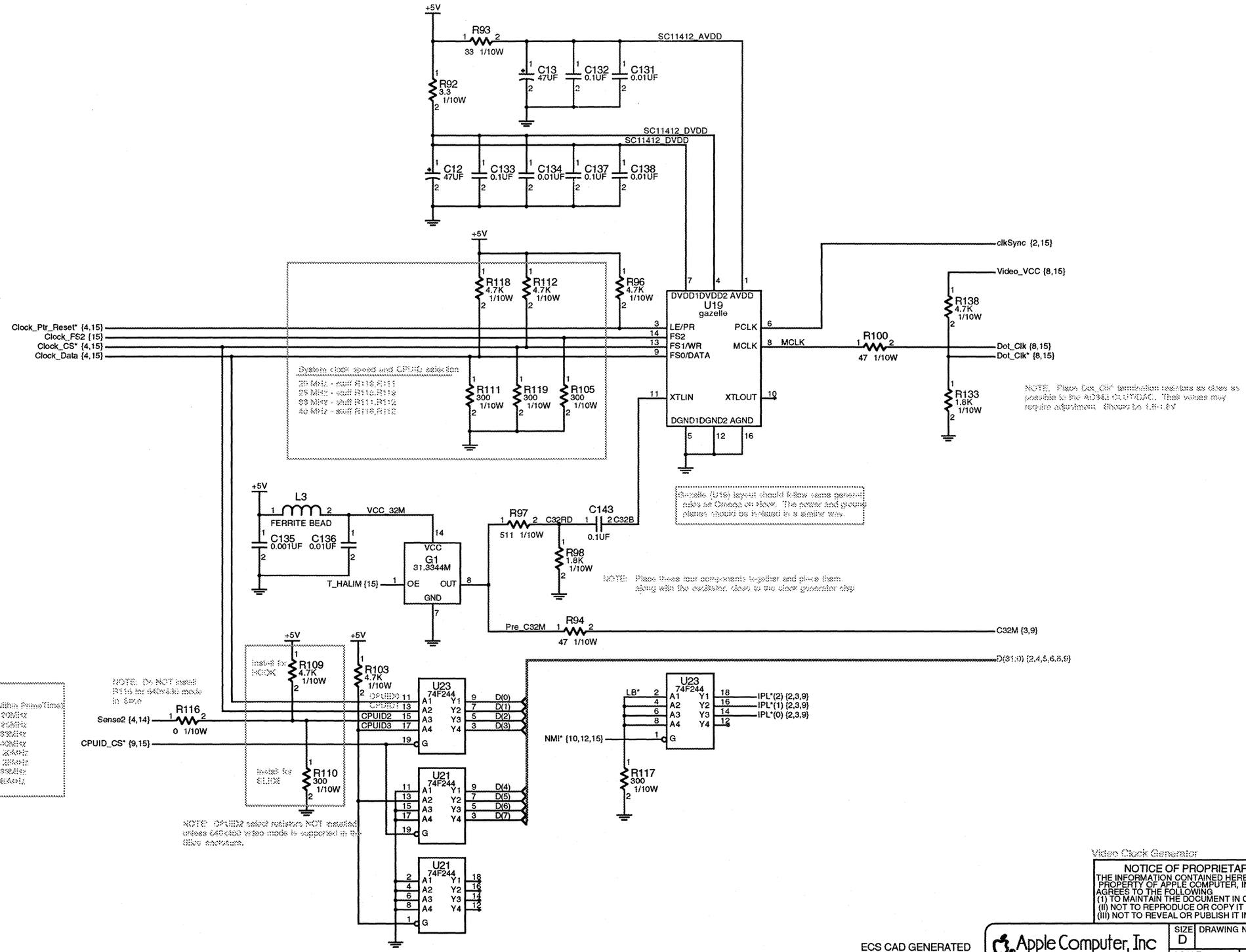

Video Clock Generator

NOTICE OF PROPRIETARY PROPERTY
THE INFORMATION CONTAINED HEREIN IS THE PROPRIETARY PROPERTY OF APPLE COMPUTER, INC. THE POSSESSOR AGREES TO THE FOLLOWING
(I) TO MAINTAIN THE DOCUMENT IN CONFIDENCE
(II) NOT TO REPRODUCE OR COPY IT
(III) NOT TO REVEAL OR PUBLISH IT IN WHOLE OR PART

ECS CAD GENERATED

Apple Computer, Inc

SIZE	DRAWING NUMBER	REV.
D		
SCALE	SHT 7 OF 15	

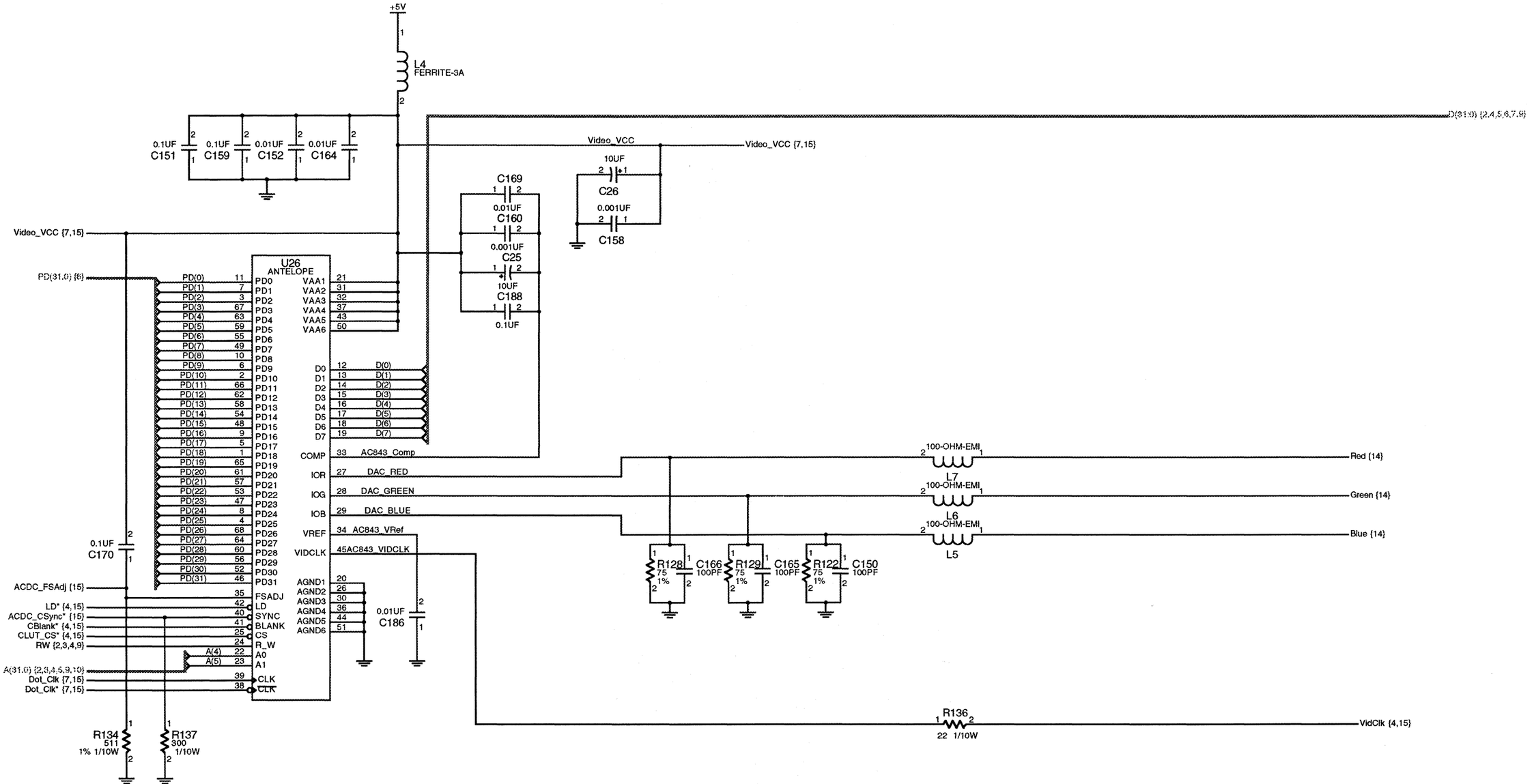
+5V
L4
FERRITE-3A
0.1UF C151
0.1UF C159
0.01UF C152
0.01UF C164
D{31:0} {2,4,5,6,7,9}
Video_VCC
Video_VCC {7,15}
10UF C26
0.001UF C158
C169 0.01UF
C160 0.001UF
C25 10UF
C188 0.1UF
Video_VCC {7,15}
PD{31:0} {6}
U26
ANTELOPE
PD(0) 11 PD0
PD(1) 7 PD1
PD(2) 3 PD2
PD(3) 67 PD3
PD(4) 63 PD4
PD(5) 59 PD5
PD(6) 55 PD6
PD(7) 49 PD7
PD(8) 10 PD8
PD(9) 6 PD9
PD(10) 2 PD10
PD(11) 66 PD11
PD(12) 62 PD12
PD(13) 58 PD13
PD(14) 54 PD14
PD(15) 48 PD15
PD(16) 9 PD16
PD(17) 5 PD17
PD(18) 1 PD18
PD(19) 65 PD19
PD(20) 61 PD20
PD(21) 57 PD21
PD(22) 53 PD22
PD(23) 47 PD23
PD(24) 8 PD24
PD(25) 4 PD25
PD(26) 68 PD26
PD(27) 64 PD27
PD(28) 60 PD28
PD(29) 56 PD29
PD(30) 52 PD30
PD(31) 46 PD31
VAA1 21
VAA2 31
VAA3 32
VAA4 37
VAA5 43
VAA6 50
D0 12 D(0)
D1 13 D(1)
D2 14 D(2)
D3 15 D(3)
D4 16 D(4)
D5 17 D(5)
D6 18 D(6)
D7 19 D(7)
COMP 33 AC843_Comp
IOR 27 DAC_RED
IOG 28 DAC_GREEN
IOB 29 DAC_BLUE
VREF 34 AC843_VRef
VIDCLK 45 AC843_VIDCLK
AGND1 20
AGND2 26
AGND3 30
AGND4 36
AGND5 44
AGND6 51
0.01UF C186
0.1UF C170
ACDC_FSAdj {15}
35 FSADJ
LD* {4,15}
42 LD
ACDC_CSync* {15}
40 SYNC
CBlank* {4,15}
41 BLANK
CLUT_CS* {4,15}
25 CS
RW {2,3,4,9}
24 R_W
A(4) 22 A0
A(5) 23 A1
A{31:0} {2,3,4,5,9,10}
Dot_Clk {7,15}
39 CLK
Dot_Clk* {7,15}
38 CLK
R134 511 1% 1/10W
R137 300 1/10W
100-OHM-EMI L7
100-OHM-EMI L6
100-OHM-EMI L5
Red {14}
Green {14}
Blue {14}
R128 75 1% C166 100PF
R129 75 1% C165 100PF
R122 75 1% C150 100PF
R136 22 1/10W
VidClk {4,15}
CLUT/DAC
NOTICE OF PROPRIETARY PROPERTY
THE INFORMATION CONTAINED HEREIN IS THE PROPRIETARY PROPERTY OF APPLE COMPUTER, INC. THE POSSESSOR AGREES TO THE FOLLOWING
(I) TO MAINTAIN THE DOCUMENT IN CONFIDENCE
(II) NOT TO REPRODUCE OR COPY IT
(III) NOT TO REVEAL OR PUBLISH IT IN WHOLE OR PART
ECS CAD GENERATED
Apple Computer, Inc
SIZE D
DRAWING NUMBER
REV.
SCALE
SHT 8 OF 15

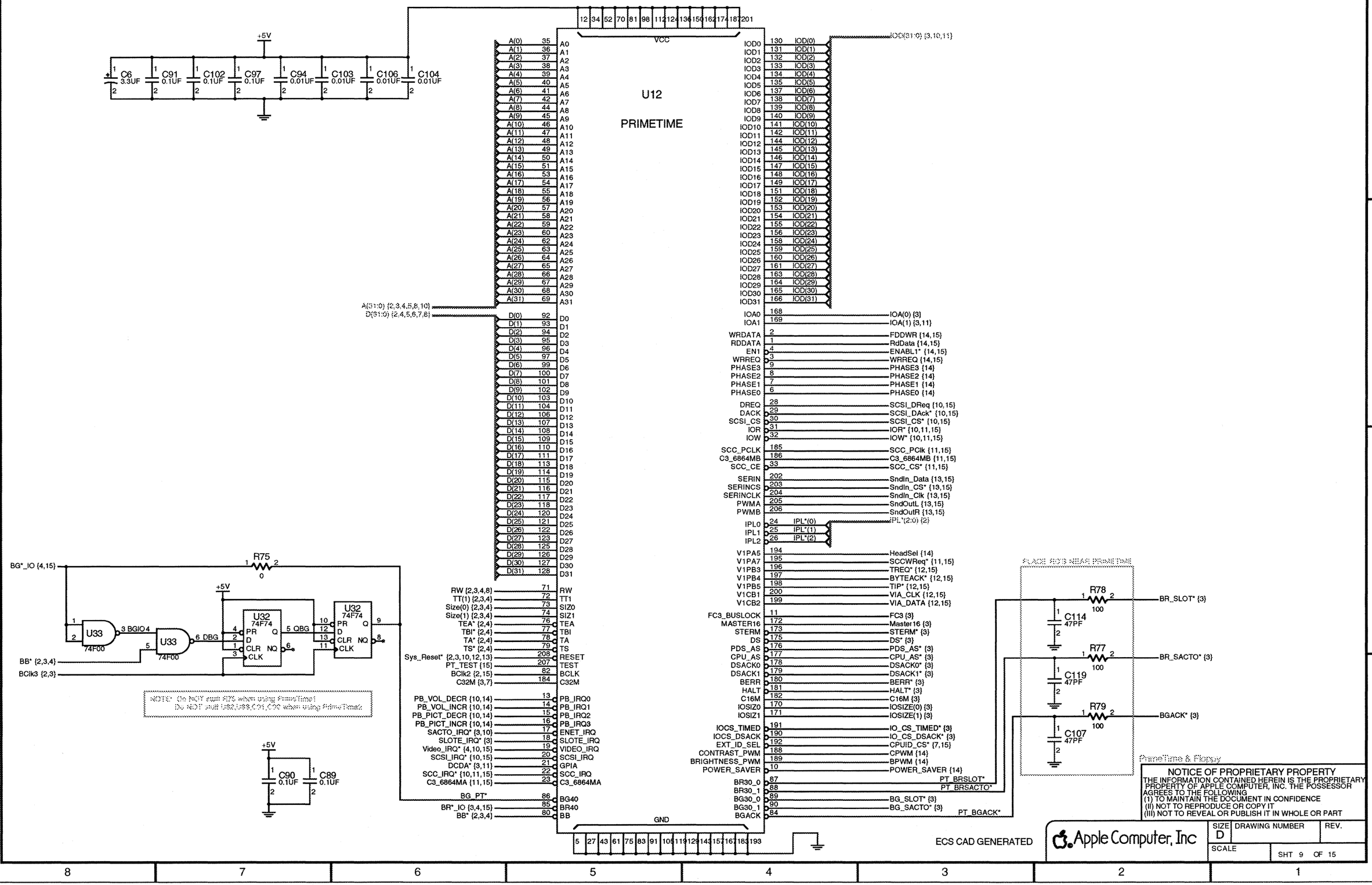
+5V
C6 3.3UF
C91 0.1UF
C102 0.1UF
C97 0.1UF
C94 0.01UF
C103 0.01UF
C106 0.01UF
C104 0.01UF
VCC
U12
PRIMETIME
A(31:0) {2,3,4,5,8,10}
D(31:0) {2,4,5,6,7,8}
IOD(31:0) {3,10,11}
IOA(0) {3}
IOA(1) {3,11}
FDDWR {14,15}
RdData {14,15}
ENABL1* {14,15}
WRREQ {14,15}
PHASE3 {14}
PHASE2 {14}
PHASE1 {14}
PHASE0 {14}
SCSI_DReq {10,15}
SCSI_DAck* {10,15}
SCSI_CS* {10,15}
IOR* {10,11,15}
IOW* {10,11,15}
SCC_PClk {11,15}
C3_6864MB {11,15}
SCC_CS* {11,15}
SndIn_Data {13,15}
SndIn_CS* {13,15}
SndIn_Clk {13,15}
SndOutL {13,15}
SndOutR {13,15}
IPL*(2:0) {2}
HeadSel {14}
SCCWReq* {11,15}
TREQ* {12,15}
BYTEACK* {12,15}
TIP* {12,15}
VIA_CLK {12,15}
VIA_DATA {12,15}
FC3 {3}
Master16 {3}
STERM* {3}
DS* {3}
PDS_AS* {3}
CPU_AS* {3}
DSACK0* {3}
DSACK1* {3}
BERR* {3}
HALT* {3}
C16M {3}
IOSIZE(0) {3}
IOSIZE(1) {3}
IO_CS_TIMED* {3}
IO_CS_DSACK* {3}
CPUID_CS* {7,15}
CPWM {14}
BPWM {14}
POWER_SAVER {14}
PT_BRSLOT*
PT_BRSACTO*
PT_BGACK*
BG_SLOT* {3}
BG_SACTO* {3}
RW {2,3,4,8}
TT(1) {2,3,4}
Size(0) {2,3,4}
Size(1) {2,3,4}
TEA* {2,4}
TBI* {2,4}
TA* {2,4}
TS* {2,4}
Sys_Reset* {2,3,10,12,13}
PT_TEST {15}
BClk2 {2,15}
C32M {3,7}
PB_VOL_DECR {10,14}
PB_VOL_INCR {10,14}
PB_PICT_DECR {10,14}
PB_PICT_INCR {10,14}
SACTO_IRQ* {3,10}
SLOTE_IRQ* {3}
Video_IRQ* {4,10,15}
SCSI_IRQ* {10,15}
DCDA* {3,11}
SCC_IRQ* {10,11,15}
C3_6864MA {11,15}
BG_PT*
BR*_IO {3,4,15}
BB* {2,3,4}
BG*_IO {4,15}
R75
0
U33
74F00
3 BGIO 4
6 DBG
5
U32
74F74
5 QBG
BB* {2,3,4}
BClk3 {2,3}
NOTE: Do NOT insert R75 when using PrimeTime!
Do NOT install U32,U33,C91,C92 when using PrimeTime!
C90 0.1UF
C89 0.1UF
GND
PLACE RES NEAR PRIMETIME
R78
100
C114 47PF
R77
100
C119 47PF
R79
100
C107 47PF
BR_SLOT* {3}
BR_SACTO* {3}
BGACK* {3}
PrimeTime & Floppy
NOTICE OF PROPRIETARY PROPERTY
THE INFORMATION CONTAINED HEREIN IS THE PROPRIETARY PROPERTY OF APPLE COMPUTER, INC. THE POSSESSOR AGREES TO THE FOLLOWING
(I) TO MAINTAIN THE DOCUMENT IN CONFIDENCE
(II) NOT TO REPRODUCE OR COPY IT
(III) NOT TO REVEAL OR PUBLISH IT IN WHOLE OR PART
ECS CAD GENERATED
Apple Computer, Inc
SIZE D
DRAWING NUMBER
REV.
SCALE
SHT 9 OF 15

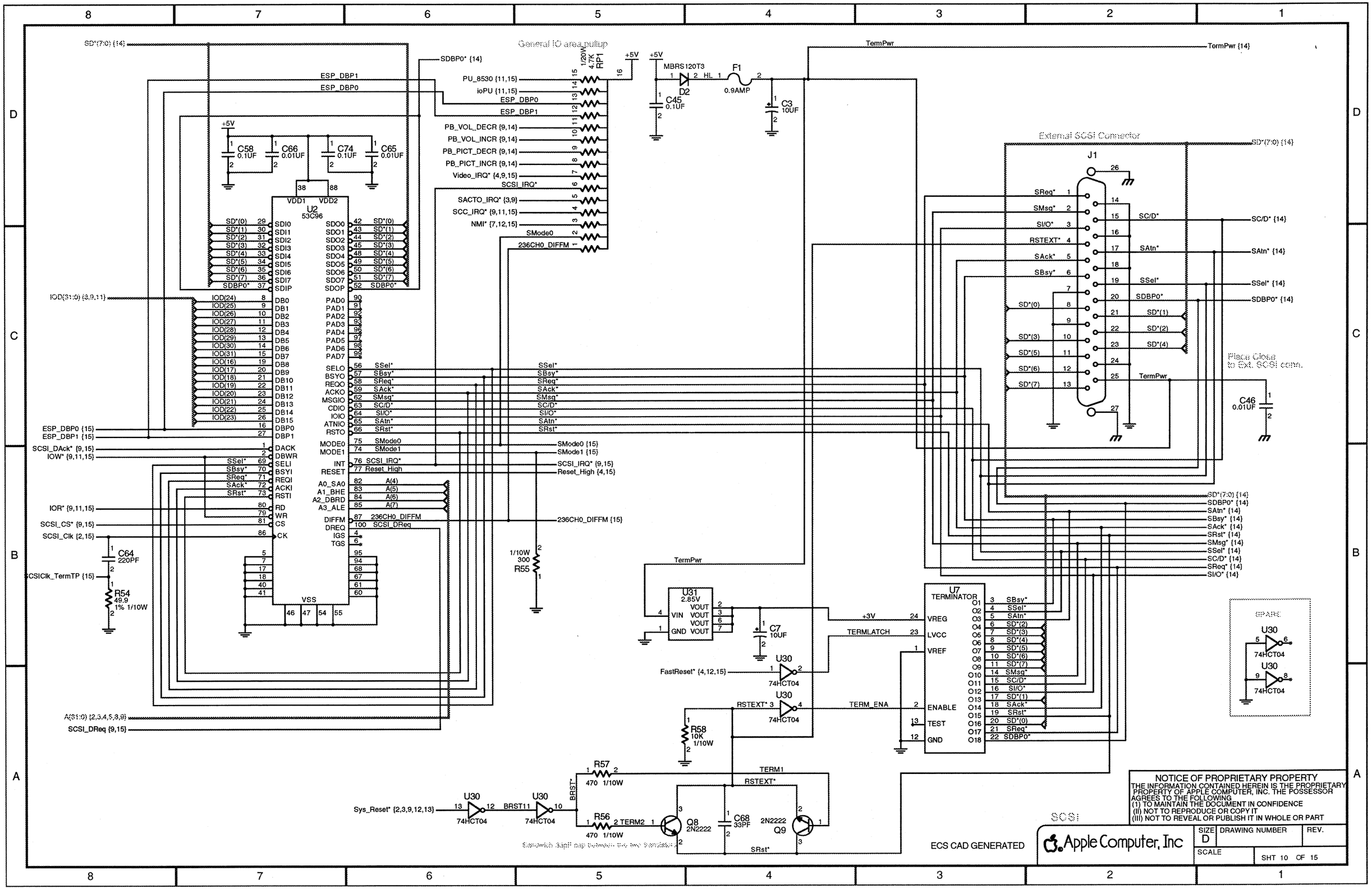

NOTICE OF PROPRIETARY PROPERTY
THE INFORMATION CONTAINED HEREIN IS THE PROPRIETARY PROPERTY OF APPLE COMPUTER, INC. THE POSSESSOR AGREES TO THE FOLLOWING
(1) TO MAINTAIN THE DOCUMENT IN CONFIDENCE
(II) NOT TO REPRODUCE OR COPY IT
(III) NOT TO REVEAL OR PUBLISH IT IN WHOLE OR PART

Apple Computer, Inc

SIZE	DRAWING NUMBER	REV.
D		
SCALE	SHT 10 OF 15	

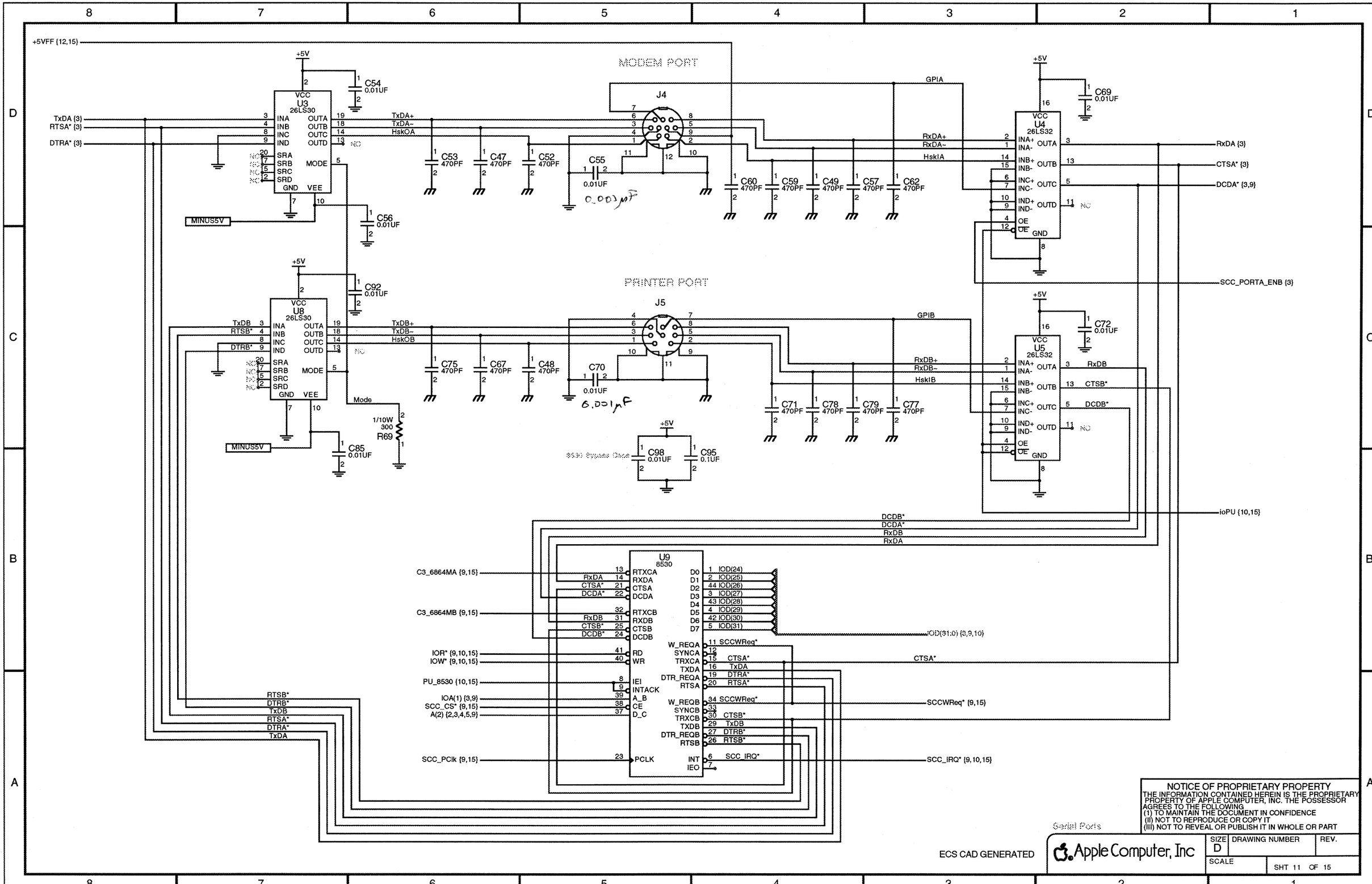

NOTICE OF PROPRIETARY PROPERTY
THE INFORMATION CONTAINED HEREIN IS THE PROPRIETARY PROPERTY OF APPLE COMPUTER, INC. THE POSSESSOR AGREES TO THE FOLLOWING
(1) TO MAINTAIN THE DOCUMENT IN CONFIDENCE
(II) NOT TO REPRODUCE OR COPY IT
(III) NOT TO REVEAL OR PUBLISH IT IN WHOLE OR PART

Serial Ports

ECS CAD GENERATED

Apple Computer, Inc

SIZE	DRAWING NUMBER	REV.
D		
SCALE	SHT 11 OF 15	

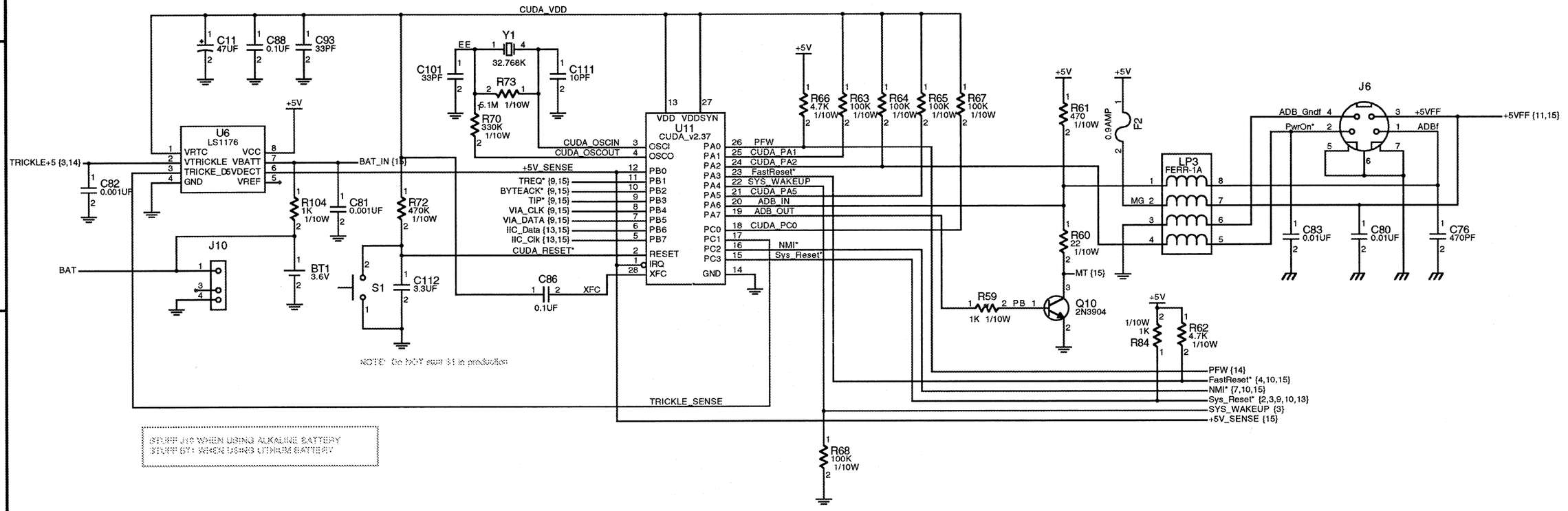

CUDA, ADB Port, Power

NOTICE OF PROPRIETARY PROPERTY
THE INFORMATION CONTAINED HEREIN IS THE PROPRIETARY PROPERTY OF APPLE COMPUTER, INC. THE POSSESSOR AGREES TO THE FOLLOWING
(I) TO MAINTAIN THE DOCUMENT IN CONFIDENCE
(II) NOT TO REPRODUCE OR COPY IT
(III) NOT TO REVEAL OR PUBLISH IT IN WHOLE OR PART

ECS CAD GENERATED

Apple Computer, Inc

SIZE	DRAWING NUMBER	REV.
D		
SCALE	SHT 12 OF 15	

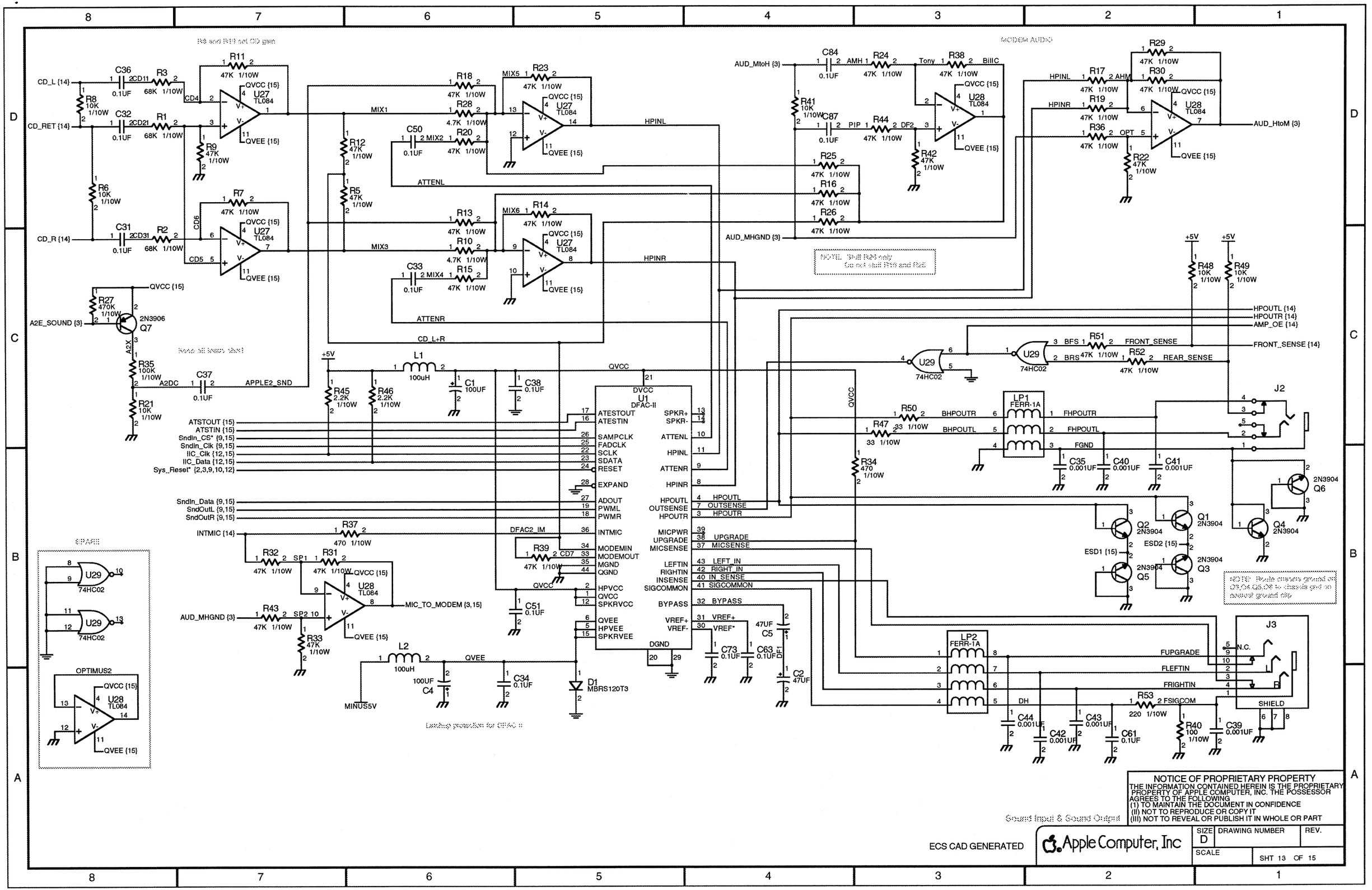
R8 and R19 not CD gain
CD_L {14}
CD_RET {14}
CD_R {14}
C36
C32
C31
R3
R1
R2
R11
R9
R7
R6
U27 TL084
QVCC {15}
QVEE {15}
CD4
CD5
CD6
MIX1
MIX3
R18
R28
R20
R13
R10
R15
R23
R14
C50
C33
MIX5
MIX6
HPINL
HPINR
ATTENL
ATTENR
CD_L+R
A2E_SOUND {3}
R27
2N3906
Q7
A2X
R35
A2DC
C37
APPLE2_SND
R21
L1
100uH
C1
C38
R45
R46
+5V
QVCC
ATSTOUT {15}
ATSTIN {15}
SndIn_CS* {9,15}
SndIn_Clk {9,15}
IIC_Clk {12,15}
IIC_Data {12,15}
Sys_Reset* {2,3,9,10,12}
U1
DFAC-II
ATESTOUT
ATESTIN
SAMPCLK
FADCLK
SCLK
SDATA
RESET
EXPAND
ADOUT
PWML
PWMR
INTMIC
MODEMIN
MODEMOUT
MGND
CGND
HPVCC
QVCC
SPKRVCC
QVEE
HPVEE
SPKRVEE
DGND
SPKR+
SPKR-
ATTENL
HPINL
ATTENR
HPINR
HPOUTL
OUTSENSE
HPOUTR
MICPWR
UPGRADE
MICSENSE
LEFTIN
RIGHTIN
INSENSE
SIGCOMMON
BYPASS
VREF+
VREF*
SndIn_Data {9,15}
SndOutL {9,15}
SndOutR {9,15}
INTMIC {14}
R37
470 1/10W
DFAC2_IM
R39
CD7
R32
R31
R43
R33
SP1
SP2
U28 TL084
AUD_MHGND {3}
MIC_TO_MODEM {3,15}
C51
L2
100uH
C4
C34
MINUS5V
D1
MBRS120T3
C5
47UF
C73
C63
C2
Lightning protection for DFAC II
SPARE
OPTIMUS2
AUD_MtoH {3}
C84
AMH
R24
Tony
R38
BillC
R41
C87
PIP
R44
DF2
R42
R25
R16
R26
NOTE: SndIn R34 only
Do not stuff R19 and R34
ACCESS AUDIO
HPINL
HPINR
R17
R30
R19
R36
R29
R22
AUD_HtoM {3}
+5V
R48
R49
HPOUTL {14}
HPOUTR {14}
AMP_OE {14}
U29 74HC02
BFS
BRS
R51
R52
FRONT_SENSE
REAR_SENSE
FRONT_SENSE {14}
QVCC
R50
R47
33 1/10W
BHPOUTR
BHPOUTL
LP1
FERR-1A
FHPOUTR
FHPOUTL
FGND
R34
470 1/10W
C35
C40
C41
0.001UF
J2
Q6
Q1
Q2
Q3
Q4
Q5
2N3904
ESD1 {15}
ESD2 {15}
NOTE: Route chassis ground of DB-04 DB-09 to chassis gnd in nearest ground clip
LP2
FERR-1A
FUPGRADE
FLEFTIN
FRIGHTIN
DH
R53
220 1/10W
FSIGCOM
R40
100 1/10W
C39
C44
C43
C42
C61
J3
N.C.
SHIELD
Sound Input & Sound Output
NOTICE OF PROPRIETARY PROPERTY
THE INFORMATION CONTAINED HEREIN IS THE PROPRIETARY PROPERTY OF APPLE COMPUTER, INC. THE POSSESSOR AGREES TO THE FOLLOWING
(I) TO MAINTAIN THE DOCUMENT IN CONFIDENCE
(II) NOT TO REPRODUCE OR COPY IT
(III) NOT TO REVEAL OR PUBLISH IT IN WHOLE OR PART
ECS CAD GENERATED
Apple Computer, Inc
SIZE D
DRAWING NUMBER
REV.
SCALE
SHT 13 OF 15

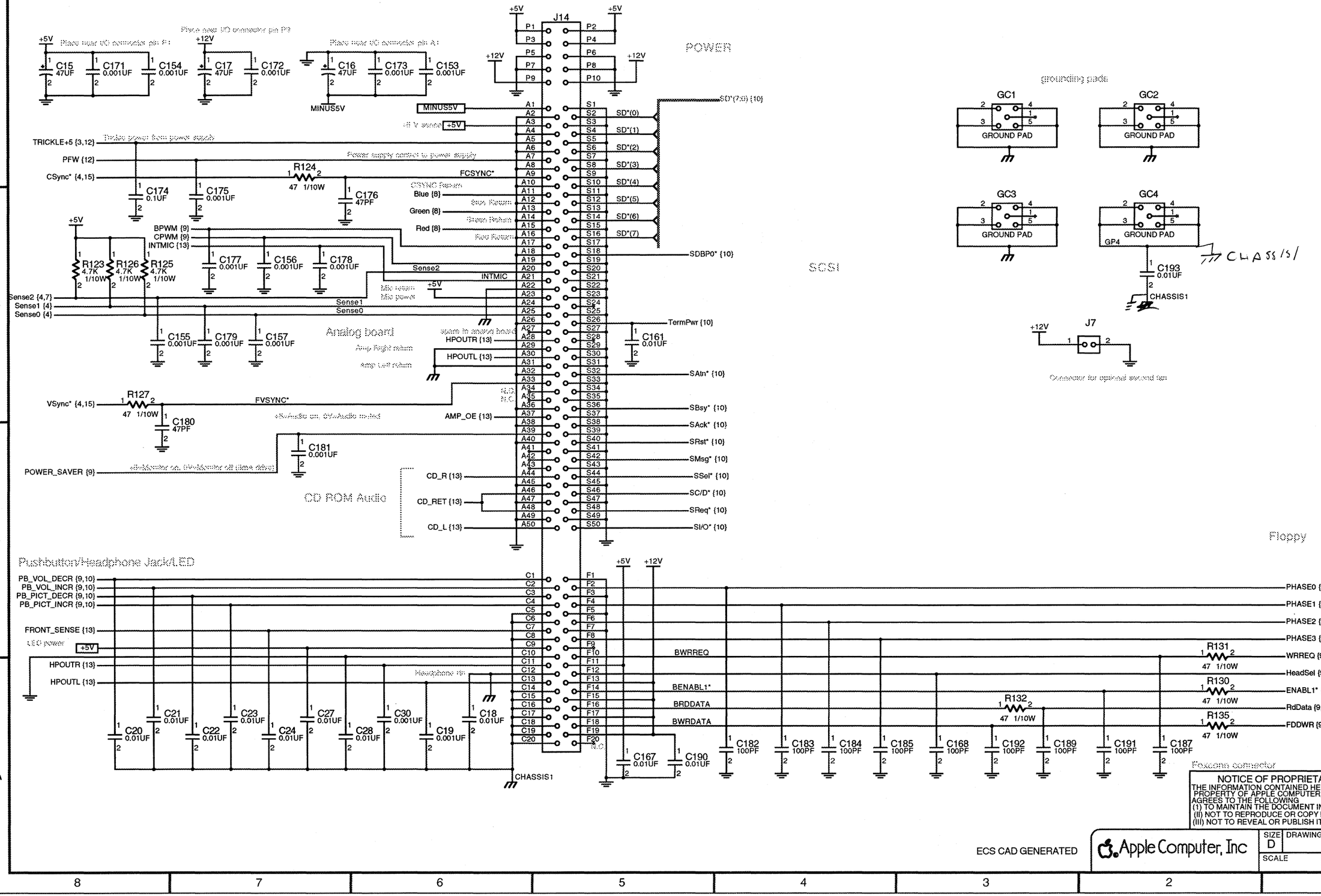
POWER
SCSI
J14
+5V
+12V
MINUS5V
SD*(7:0) {10}
SD*(0)
SD*(1)
SD*(2)
SD*(3)
SD*(4)
SD*(5)
SD*(6)
SD*(7)
SDBP0* {10}
TermPwr {10}
SAtn* {10}
SBsy* {10}
SAck* {10}
SRst* {10}
SMsg* {10}
SSel* {10}
SC/D* {10}
SReq* {10}
SI/O* {10}
C15 47UF
C171 0.001UF
C154 0.001UF
C17 47UF
C172 0.001UF
C16 47UF
C173 0.001UF
C153 0.001UF
C161 0.01UF
TRICKLE+5 {3,12}
PFW {12}
CSync* {4,15}
R124 47 1/10W
C174 0.1UF
C175 0.001UF
C176 47PF
FCSYNC*
Blue {8}
Green {8}
Red {8}
BPWM {9}
CPWM {9}
INTMIC {13}
R123 4.7K 1/10W
R126 4.7K 1/10W
R125 4.7K 1/10W
C177 0.001UF
C156 0.001UF
C178 0.001UF
Sense2
INTMIC
Sense2 {4,7}
Sense1 {4}
Sense0 {4}
Sense1
Sense0
C155 0.001UF
C179 0.001UF
C157 0.001UF
Analog board
HPOUTR {13}
HPOUTL {13}
AMP_OE {13}
VSync* {4,15}
R127 47 1/10W
FVSYNC*
C180 47PF
C181 0.001UF
POWER_SAVER {9}
CD ROM Audio
CD_R {13}
CD_RET {13}
CD_L {13}
Pushbutton/Headphone Jack/LED
PB_VOL_DECR {9,10}
PB_VOL_INCR {9,10}
PB_PICT_DECR {9,10}
PB_PICT_INCR {9,10}
FRONT_SENSE {13}
C20 0.01UF
C21 0.01UF
C22 0.01UF
C23 0.01UF
C24 0.01UF
C27 0.01UF
C28 0.01UF
C30 0.001UF
C19 0.001UF
C18 0.01UF
CHASSIS1
C167 0.01UF
C190 0.01UF
BWRREQ
BENABL1*
BRDDATA
BWRDATA
C182 100PF
C183 100PF
C184 100PF
C185 100PF
C168 100PF
C192 100PF
C189 100PF
C191 100PF
C187 100PF
R131 47 1/10W
R130 47 1/10W
R132 47 1/10W
R135 47 1/10W
PHASE0 {9}
PHASE1 {9}
PHASE2 {9}
PHASE3 {9}
WRREQ {9,15}
HeadSel {9}
ENABL1* {9,15}
RdData {9,15}
FDDWR {9,15}
Floppy
Foxconn connector
GC1
GC2
GC3
GC4
GROUND PAD
GP4
C193 0.01UF
CHASSIS1
J7
NOTICE OF PROPRIETARY PROPERTY
THE INFORMATION CONTAINED HEREIN IS THE PROPRIETARY PROPERTY OF APPLE COMPUTER, INC. THE POSSESSOR AGREES TO THE FOLLOWING
(I) TO MAINTAIN THE DOCUMENT IN CONFIDENCE
(II) NOT TO REPRODUCE OR COPY IT
(III) NOT TO REVEAL OR PUBLISH IT IN WHOLE OR PART
ECS CAD GENERATED
Apple Computer, Inc
SIZE D
DRAWING NUMBER
REV.
SCALE
SHT 14 OF 15

Test points

+3V {10} TP123
+5VFF {11,12} TP27
+5V_SENSE {12} TP127
236CH0_DIFFM {10} TP77
2X_Clk {2} TP206
A2DC {13} TP18
A2X {13} TP36
AC843_Comp {8} TP239
AC843_VIDCLK {8} TP241
AC843_VRef {8} TP235
ACDC_CSync* {8} TP243
ACDC_FSAdj {8} TP237
ADB_Gndf {12} TP110
ADB_IN {12} TP106
ADB_OUT {12} TP87
ADBf {12} TP25
APPLE2_SND {13} TP9
ATTENL {13} TP35
ATTENR {13} TP17
BCk1TermTP {2} TP143
BCk2TermTP {2} TP141
BClk0a {2} TP192
BClk2 {2,9} TP177
BClk3a {2} TP188
BClkDiv2 {2} TP221
BFS {13} TP56
BG*_IO {4,9} TP142
BGIO {9} TP138
BG_PT* {9} TP139
BHPOUTL {13} TP54
BHPOUTR {13} TP62
BR*_IO {3,4,9} TP140
BRS {13} TP63
BRST {10} TP121
BRST* {10} TP73
BYPASS {13} TP49
BYTE {5} TP160
BYTEACK* {9,12} TP132
C32B {7} TP216
C32RD {7} TP197
C3_6864MA {9,11} TP124
C3_6864MB {9,11} TP59
CBlank* {4,8} TP182
CD1 {13} TP8
CD2 {13} TP5
CD3 {13} TP1
CD4 {13} TP10
CD5 {13} TP7
CD6 {13} TP4
CD7 {13} TP45
CD_L+R {13} TP47
CLUT_CS* {4,8} TP180
CPUID2 {7} TP217
CPUID3 {7} TP207
CPUID_CS* {7,9} TP210
CSync* {4,14} TP229
CTSB* {11} TP101
CUDA_PA1 {12} TP111
CUDA_PA2 {12} TP111
CUDA_PA5 {12} TP108
CUDA_PC0 {12} TP118
CUDA_VDD {12} TP115
Clock_CS* {4,7} TP212
Clock_Data {4,7} TP215
Clock_FS2 {7} TP218
Clock_Ptr_Reset* {4,7} TP193
DAC_BLUE {8} TP224
DAC_GREEN {8} TP232
DAC_RED {8} TP236
DBG {9} TP136
DCDB* {11} TP100
DF1 {13} TP33
DFAC2_IM {13} TP41
DRAS*{0} {4,5} TP231
DTRB* {11} TP97
Dot_Clk {7,8} TP242
Dot_Clk* {7,8} TP244
ENABL1* {9,14} TP116
ESP_DBP0 {10} TP119
ESP_DBP1 {10} TP90
FDDWR {9,14} TP238
FastReset* {4,10,12} TP219
GPIA {11} TP80
GPIB {11} TP85
HPINL {13} TP11
HPINR {13} TP3
HskIA {11} TP76
HskIB {11} TP82
HskOA {11} TP75
HskOB {11} TP84
IIC_Clk {12,13} TP48
IIC_Data {12,13} TP51
IOR* {9,10,11} TP95
IOW* {9,10,11} TP19
LB* {7} TP228
LD* {4,8} TP179
LEFT_IN {13} TP66
MCLK {7} TP184
MEMCjr_DA(0) {4} TP155
MEMCjr_DA(1) {4} TP156
MEMCjr_DA(10) {4} TP154
MEMCjr_DA(11) {4} TP176
MEMCjr_DA(2) {4} TP157
MEMCjr_DA(3) {4} TP158
MEMCjr_DA(4) {4} TP159
MEMCjr_DA(5) {4} TP161
MEMCjr_DA(6) {4} TP167
MEMCjr_DA(7) {4} TP169
MEMCjr_DA(8) {4} TP172
MEMCjr_DA(9) {4} TP173
MEMCjr_DCAS*(0) {4} TP146
MEMCjr_DCAS*(1) {4} TP151
MEMCjr_DCAS*(2) {4} TP147
MEMCjr_DCAS*(3) {4} TP148
MEMCjr_DRAS*(0) {4} TP149
MEMCjr_DRAS*(1) {4} TP150
MEMCjr_DRAS*(2) {4} TP152
MEMCjr_DSF0 {4} TP203
MEMCjr_DWE* {4} TP153
MEMCjr_LD* {4} TP165
MEMCjr_ROM_OE* {4} TP145
MEMCjr_SCLK0 {4} TP189
MEMCjr_SOE0* {4} TP190
MEMCjr_TROE0* {4} TP166

MEMCjr_VA(0) {4} TP175
MEMCjr_VA(1) {4} TP223
MEMCjr_VA(2) {4} TP222
MEMCjr_VA(3) {4} TP214
MEMCjr_VA(4) {4} TP213
MEMCjr_VA(5) {4} TP211
MEMCjr_VA(6) {4} TP209
MEMCjr_VA(7) {4} TP208
MEMCjr_VA(8) {4} TP204
MEMCjr_VCAS0* {4} TP174
MEMCjr_VRAS0* {4} TP170
MEMCjr_VWE0* {4} TP162
MEMCjr_VWE1* {4} TP163
MEMCjr_VWE2* {4} TP202
MEMCjr_VWE3* {4} TP164
MIX1 {13} TP13
MIX2 {13} TP34
MIX3 {13} TP2
MIX4 {13} TP15
MIX5 {13} TP32
MIX6 {13} TP14
Mode {11} TP122
NMI* {7,10,12} TP226
CUDA_OSCOUT {12} TP128
XFC {12} TP109
CUDA_OSCIN {12} TP135
EE {12} TP130
MT {12} TP105
MG {12} TP113
PB {12} TP104
HL {10} TP69
BiliC {13} TP91
AMH {13} TP107
Tony {13} TP40
PIP {13} TP112
DF2 {13} TP44
OPT {13} TP30
AHM {13} TP29
ESD1 {13} TP6
ESD2 {13} TP12
OPTIMUS2 {13} TP42
MIC_TO_MODEM {3,13} TP37
DH {13} TP39
OUTSENSE {13} TP57
PU_8530 {10,11} TP78
Pre_C32M {7} TP187
PwrOn* {12} TP28
QBG {9} TP137
QVCC {13} TP43
QVEE {13} TP16
RIGHT_IN {13} TP67
RST_IN* {2} TP171
RTSB* {11} TP103
RdData {9,14} TP227
Reset_High {4,10} TP21
RxDA+ {11} TP81
RxDA~ {11} TP83
RxDB {11} TP99
RxDB+ {11} TP86
RxDB~ {11} TP26
SC11412_AVDD {7} TP185
SC11412_DVDD {7} TP168
SP1 {13} TP255
SP2 {13} TP256

SCCWReq* {9,11} TP89
SCC_CS* {9,11} TP144
SCC_IRQ* {9,10,11} TP94
SCC_PClk {9,11} TP61
SCSIClk_TermTP {10} TP225
SCSI_CS* {9,10} TP53
SCSI_Clk {2,10} TP65
SCSI_DAck* {9,10} TP88
SCSI_DReq {9,10} TP70
SCSI_IRQ* {9,10} TP91
SIGCOMMON {13} TP72
SMode0 {10} TP20
SMode1 {10} TP22
SndIn_CS* {9,13} TP52
SndIn_Clk {9,13} TP55
SndIn_Data {9,13} TP60
SndOutL {9,13} TP46
SndOutR {9,13} TP38
TERM1 {10} TP68
TERM2 {10} TP74
TERMLATCH {10} TP93
TERM_ENA {10} TP120
TIP* {9,12} TP126
TREQ* {9,12} TP131
TRICKLE_SENSE {12} TP117
TxDA+ {11} TP24
TxDA~ {11} TP23
TxDB {11} TP102
TxDB+ {11} TP92
TxDB~ {11} TP96
UPGRADE {13} TP64
VCC_32M {7} TP194
VIA_CLK {9,12} TP129
VIA_DATA {9,12} TP125
VREF* {13} TP58
VREF+ {13} TP50
VSync* {4,14} TP233
VidClk {4,8} TP240
Video_IRQ* {4,9,10} TP134
Video_VCC {7,8} TP245
WRREQ {9,14} TP234
clkAGnd {2} TP195
clkEnable {2} TP199
clkMR {2} TP200
clkRC {2} TP191
clkSync {2,7} TP183
clkVcc {2} TP205
djMEMC_CBlank* {4} TP178
ioPU {10,11} TP79
tpClkRC {2} TP196
T_HALIM {7} TP198
TP201
TP133
TP98
TP71
TP181
TP220
TP230
MEMCJR_TEST {4} TP246
PT_TEST {9} TP247
ATSTOUT {13} TP248
ATSTIN {13} TP249

PT_BGACK* {9} TP250
PT_BRSACTO* {9} TP251
PT_BRSLOT* {9} TP252
RE {3} TP253
RST_EXP {3} TP254
BAT_IN {12} TP257
FGND {13} TP258
FHPOUTL {13} TP259
REAR_SENSE {13} TP260
FHPOUTR {13} TP261

ZH9 PLATED
ZH5 PLATED
ZH7 PLATED
ZH41 PLATED
ZH42 PLATED
ZH4 PLATED
ZH8 PLATED
ZH6 PLATED

ZH31 PLATED
ZH19 PLATED
ZH17 PLATED
ZH14 PLATED
ZH13 PLATED
ZH11 PLATED
ZH12 PLATED
ZH49 PLATED
ZH57 PLATED
ZH54 PLATED
ZH38 PLATED
ZH27 PLATED
ZH16 PLATED
ZH20 PLATED
ZH58 PLATED
ZH56 PLATED
ZH50 PLATED
ZH45 PLATED
ZH55 PLATED
ZH44 PLATED
ZH25 PLATED
ZH28 PLATED
ZH48 PLATED
ZH29 PLATED
ZH39 PLATED
ZH47 PLATED
ZH26 PLATED
ZH33 PLATED
ZH43 PLATED
ZH37 PLATED
ZH32 PLATED
ZH22 PLATED
ZH23 PLATED
ZH21 PLATED
ZH36 PLATED
ZH34 PLATED
ZH35 PLATED
ZH18 PLATED
ZH15 PLATED
ZH30 PLATED
ZH24 PLATED
ZH51 PLATED
ZH52 PLATED
ZH53 PLATED
ZH40 PLATED

ZH60 PLATED
ZH61 PLATED
ZH62 PLATED
ZH63 PLATED
ZH64 PLATED
ZH65 PLATED
ZH66 PLATED
ZH67 PLATED
ZH68 PLATED
ZH69 PLATED
ZH70 PLATED
ZH71 PLATED
ZH72 PLATED
ZH73 PLATED
ZH74 PLATED
ZH75 PLATED
ZH76 PLATED
ZH77 PLATED
ZH78 PLATED

Test points and ground clips

Optimus Main Logic Board BOM v4.1-25MHz

Net Ripper BOM Conversion of: optimus_v20.bom, 4-27-1993 , 15:03

The following items are being excluded:
Ref.Des: ZH?,TP?,W?
Filters are OR

Sorting on: Ref. Des, P/N, Value

Item #	Qty	Part #	Device Type	Package	Description	Value	Voltage	Wattage	Tolerance	Ref. Designators	Comments
1	2	101S1000	RES	RES_0805	RESISTOR,	0				R106,R116	qty increased by 1 (6/14/93)
2	4	101S1102	RES-V	RES_0805	RESISTOR,	100		1/10W		R40,R77,R78,R79	qty increased by 3 (6/14/93)
3	6	101S1103	RES	RES_0805	RESISTOR,	1K		1/10W		R59,R84,R85,R86,R87,R104	qty increased by 1 (3/15/93)
4	7	101S1104	RES-V	RES_0805	RESISTOR,	10K		1/10W		R6,R8,R21,R41,R48,R49,R58	
5	6	101S1105	RES-V	RES_0805	RESISTOR,	100K		1/10W		R35,R63,R64,R65,R67,R68	qty increased by 1 (2/16/93)
6	2	101S1183	RES-V	RES_0805	RESISTOR,	1.8K		1/10W		R98,R133	qty increased by 1 (3/15/93)
7	2	101S1221	RES-V	RES_0805	RESISTOR,	22		1/10W		R60,R136	
8	1	101S1222	RES	RES_0805	RESISTOR,	220		1/10W		R53	new part (2/16/93)
9	2	101S1223	RES-V	RES_0805	RESISTOR,	2.2K		1/10W		R45,R46	new part (2/16/93)
10	12	101S1302	RES-V	RES_0805	RESISTOR,	300		1/10W		R55,R69,R71,R81,R82,R91,R95,R105	qty decreased by 3 (6/14/93)
										R117,R119,R121,R137	
11	1	101S1330	RES-V	RES_0805	RESISTOR,	3.3		1/10W		R92	new part (5/17/93)
12	3	101S1331	RES	RES_0805	RESISTOR,	33		1/10W		R47,R50,R93	qty Increased by 1 (5/17/93)
13	1	101S1335	RES-V	RES_0805	RESISTOR,	330K		1/10W		R70	
14	15	101S1471	RES	RES_0805	RESISTOR,	47		1/10W		R74,R88,R90,R94,R100,R101,R102,R108,R113,R124	qty increased by 3 (4/22/93)
										R127,R130,R131,R132,R135	
15	5	101S1472	RES-V	RES_0805	RESISTOR,	470		1/10W		R34,R37,R56,R57,R61	qty decreased by 1 (3/15/93)
16	15	101S1473	RES	RES_0805	RESISTOR,	4.7K		1/10W		R10,R28,R62,R66,R89,R96,R99,R103	qty increased by 2 (3/15/93)
										R114,R115,R118,R123,R125,R126,R138	
17	29	101S1474	RES-V	RES_0805	RESISTOR,	47K		1/10W		R5,R7,R9,R11,R12,R13,R14,R15,R17	qty increased by 4 (6/14/93)
										R18,R19,R20,R22,R23,R24,R26,R29,R30	
										R31,R32,R33,R36,R38,R39,R42,R43,R44,R51	
										R52	
18	3	101S1475	RES-V	RES_0805	RESISTOR,	470K		1/10W		R27,R72,R107	
19	1	101S1516	RES	RES_0805	RESISTOR,	5.1M		1/10W		R73	
20	3	101S1684	RES	RES_0805	RESISTOR,	68K		1/10W		R1,R2,R3	
21	1	106S1212	RES-V	RES_0805	RESISTOR,	121		1/10W	1%	R80	new part (4/22/93)
22	3	106S4991	RES-V	RES_0805	RESISTOR,	49.9		1/10W	1%	R54,R76,R83	qty decreased by 1 (3/15/93)
23	2	106S5112	RES	RES_0805	RESISTOR,	511		1/10W		R97,R134	
24	1	106S6191	RES	RES_0805	RESISTOR,	61.9		1/10W	1%	R4	
25	3	108S7501	RES-V	RES_1206	RESISTOR,	75			1%	R122,R128,R129	
26	5	112S0301	RPAK8P	SOI_16M	RPAK, 16 PIN, ISOLATED,	47		1/10W		RP5,RP6,RP7,RP8,RP9	qty decreased by 1 (3/12/93)
27	4	112S0406	RPAK16C	SOI_16M	RPAK, 16 PIN, BUSSED,	4.7K		1/20W		RP1,RP2,RP3,RP4	
28	2	126S1020	CAP-V	CAP_ELECSM_6MM	CAPACITOR, POLARIZED,	100UF	6.3V		20%	C1,C4	qty increased by 1 (6/14/93)
29	10	126S4710	CAP-V	CAP_ELECSM_6MM	CAPACITOR, POLARIZED,	47UF	16V		20%	C2,C5,C8,C11,C12,C13,C15,C16,C17,C29	qty decreased by 1 (6/14/93)
30	4	127S1012	CAP-V	CAP_TANTC_SM	CAPACITOR, POLARIZED,	10UF	16V		20%	C3,C7,C25,C26	
31	4	127S3301	CAP-V	CAP_TANTB_SM	CAPACITOR, POLARIZED,	3.3UF	16V		20%	C6,C9,C10,C14	
32	1	131S1010	CAP-NP-V	CAP_0805	CAPACITOR, NON-POLARIZED,	10PF	50V		10%	C111	qty decreased by 3 (6/14/93)
33	12	131S1021	CAP-NP-V	CAP_0805	CAPACITOR, NON-POLARIZED,	100PF	50V		5%	C150,C165,C166,C168,C182,C183,C184,C185,C187,C189	
										C191,C192	qty increased by 1 (3/12/93)
34	3	131S2220	CAP-NP-V	CAP_0805	CAPACITOR, NON-POLARIZED,	220PF	50V		10%	C64,C96,C116	qty increased by 1 (6/14/93)
35	3	131S3310	CAP-NP-V	CAP_0805	CAPACITOR, NON-POLARIZED,	33PF	50V		10%	C68,C93,C101	qty increased by 3 (6/14/93)
36	5	131S4710	CAP-NP-V	CAP_0805	CAPACITOR, NON-POLARIZED,	47PF	25V		20%	C107,C114,C119,C176,C180	qty decreased by 8 (6/14/93)
37	16	131S4720	CAP-NP-V	CAP_0805	CAPACITOR, NON-POLARIZED,	470PF	50V		10%	C47,C48,C49,C52,C53,C57,C59,C60,C62,C67	
										C71,C75,C76,C77,C78,C79	qty increased by 6 (6/14/93)
38	27	132S1030	CAP-NP-V	CAP_0805	CAPACITOR, NON-POLARIZED,	0.001UF	50V		10%	C19,C30,C35,C39,C40,C41,C42,C43,C44,C81	
										C82,C135,C153,C154,C155,C156,C157,C158,C160,C171	
										C172,C173,C175,C177,C178,C179,C181	qty increased by 9 (6/14/93)
39	57	132S1041	CAP-NP-V	CAP_0805	CAPACITOR, NON-POLARIZED,	0.01UF	50V		10%	C18,C20,C21,C22,C23,C24,C27,C28,C46,C54	
										C55,C56,C65,C66,C69,C70,C72,C80,C83,C85	
										C92,C94,C98,C99,C100,C103,C104,C105,C106,C108	
										C110,C117,C118,C122,C123,C125,C127,C128,C130,C131	
										C134,C136,C138,C139,C141,C145,C146,C149,C152,C161	

										C162,C164,C167,C169,C186,C190,C193	qty increased by 2 (3/17/93)
40	48	132S1053	CAP-NP	CAP_0805	CAPACITOR, NON-POLARIZED,	0.1UF	25V		20%	C31,C32,C33,C34,C36,C37,C38,C45,C50,C51	
										C58,C61,C63,C73,C74,C84,C86,C87,C88,C89	
										C90,C91,C95,C97,C102,C109,C113,C115,C120,C121	
										C124,C126,C129,C132,C133,C137,C140,C142,C143,C144	
										C147,C148,C151,C159,C163,C170,C174,C188	
41	1	138S0303	CAP-NP-V	1206	CAPACITOR, NON-POLARIZED,	3.3UF	50V		10%	C112	
42	2	151S1020	IND		INDUCTOR,	100uH				L1,L2	
43	1	155-0063	LPAK3P	IND_6W450_SM	LPAK, FILTER, 3 LINE,SMD	FERR-1A				LP1	
44	2	155-0064	LPAK4P	IND_8W450_SM	LPAK, FILTER, 4 LINE,SMD	FERR-1A				LP2,LP3	
45	1	155-0070	IND	FERRITE	INDUCTOR	FERRITE BEAD				L3	
46	3	155S0076	IND	IND_0805	INDUCTOR,	100-OHM-EMI				L5,L6,L7	
47	1	159S0002	IND-V	S_IND_FER_217	INDUCTOR,	FERRITE-3A				L4	
48	1	197S0211	CRYSTAL-4PIN-SM	CRY_4PIN_SM	CRYSTAL, 4 PIN,	32.768K				Y1	
49	1	197S0512	OSC	OSC_4PIN_SM	OSCILLATOR, TRI-STATE,	31.3344M				G1	
50	1	291S0002	74HC02-SOI	SOI_14N	IC, 74HC02 QUAD 2-INPUT NOR					U29	
51	1	297S0004	74HCT04-SOI	SOI_14N	IC, 74HCT04 HEX INVERTER					U30	new part (3/17/93)
52	1	299S0000	74F00-SOI	SOI_14N	IC, 74F00 QUAD 2-INPUT NAND					U33	new part (3/17/93)
53	1	299S0074	74F74-SOI-I	SOI_14N	IC, 74F74 DUAL D-TYPE FLIP-FLOP					U32	
54	**1**	**299S0244**	**74F244-SOI-I**	**SOI_20W**	**IC, 74F244 OCTAL TS BUFFER**					**U23**	**qty increase by 1 (3/12/93)**
55	2	315S2630	26LS30-PLC	PLC_20	IC, 26LS30, LINE DRIVER					U3,U8	
56	2	315S2632	26LS32-SOI	SOI_16N	IC, 26LS32, DIF. LINE DRIVER					U4,U5	
57	8	333S1021	DRAM-1MX4-80-SOJ	SOJ_26_OFFSET	DRAM, 1MX4, 80NS, SOJ					U10,U13,U14,U16,U18,U22,U24,U25	
58	1	337-6881	68LC040-20-PGA	PGA_68040	IC, 68LC040 CPU, 25MHZ					U15	part number assigned (4/22/93)
59	1	337S5396	53C96-FLA	FLA_20X30	IC, 53C96					U2	
60	1	337S8532	8530-8-PLC-I	PLC_44	IC, 8530 8MHZ, SCC					U9	
61	1	341S0788	EGRET-SOI	SOI_28W	IC, CUSTOM, CUDA v2.37					U11	**part number changed (6/14/93)**
62	1	341S1062	ROM-256KX16-150-SOI	SOI_40W545	IC, ROM-LO, 256KX16, 150NS					U35	part number assigned (4/22/93)
63	1	341S1063	ROM-256KX16-150-SOI	SOI_40W545	IC, ROM-HI, 256KX16, 150NS					U34	part number assigned (4/22/93)
64	1	343-0129	DFAC-II-PLC	PLC_44	IC, ASIC DIGITALLY FILTERED AUDIO CHIP II					U1	
65	1	343S0120	PWR-MON-LS1176-SOI	SOI_8N	IC, LS1176, POWER MONITOR					U6	
66	1	343S0135	PRIMETIME	FLA_208	IC,PRIMETIME ASIC					U12	part number assigned (3/17/93)
67	1	343S0161	SC11412-CLKGEN	SOI_16W	IC, PROGRAMMABLE FREQ. GENERATOR					U19	part number assigned (4/22/93)
68	1	343S0164	MEMCJR	FLA_160	IC, MEMCJR GATE ARRAY					U17	part number assigned (3/17/93)
69	1	343S1091	AC842-PLC	PLC_68	IC, ANTELOPE, CUSTOM VIDEO CLUT/DAC					U26	
70	2	353S0084	OPAMP-TL084-SOI	SOI_14N	IC, OPAMP TL084,JFET,QUAD					U27,U28	
71	1	353S3468	REG-MC34268-SOI	SOI_8N	VOLTAGE REG, SCSI ACTIVE TERMINATION					U31	
72	1	355S1423	MCCS142235	SOI_24N	SCSI BUS ACTIVE TERMINATOR					U7	
73	1	359S0021	CLK-DR-MC88920-SOI	SOI_20W	IC, MC88920, LOW SKEW CMOS PLL CLOCK DRIVER					U20	**new part (3/12/93)/25MHz config only**
74	2	371S0007	DIODE-V	DIO_SMB_SM	DIODE,	MBRS120T3				D1,D2	
75	7	372S3904	TRA-2N3904-SM	TRA_SOT23	TRAN, 2N3904, SM NPN	2N3904				Q1,Q2,Q3,Q4,Q5,Q6,Q10	qty increased by 6 (2/16/93)
76	1	372S3906	TRA-2N3906-SM	TRA_SOT23	TRAN, 2N3906, PNP SM	2N3906				Q7	
77	2	376S0003	TRA-2N2222-SM	TRA_SOT23	TRAN, 2N2222, SM NPN	2N2222				Q8,Q9	
78	1	513-0212	CON-112ST-MICROCHAN	CON_112ST_MICROCHAN	CON, 112PIN MICROCHANNEL 1KEY/1WEB					J9	part number assigned (4/22/93)
79	1	513-0302	CON-FOXCONN	NEW_MLB	CON,MALE,IO,MLB					J14	
80											
81	1	515-1308	CON-4ST-BTRY	CON_4ST_HDRA	CONN,1 ROW,.100 CENTERS					J10	part number assigned (4/22/93)
82	1	517-0711	CON-SIMM-72ST	CON_72ST_SIMM	CONN, 72 PIN SIMM					J12	
83	1	517-0714	CON-8RT-DIN-SHIELD	CON_8RT_DIN_SL	CONN, 8 PIN MINI DIN, SHIELDED,PLATINUM					J5	new part (2/16/93)
84	1	517-0715	CON-4RT-DIN-SHIELD	CON_4RT_DIN_SL	CONN, 4 PIN MINI DIN,SHIELDED,PLATINUM					J6	new part (3/12/93)
85	1	517-0743	CON-SIMM-2X68ST	CON_68X2_SIMM	CONN, 68X2 SIMM					J11	
86	1	517-0745	CON-SIMM-64ST	CON_ROMSIMM	CONN, 64 PIN SIMM SOCKET					J13	
87	1	517-0764	CON-F9RT-DIN	CON_9RT_DIN	CONN, ASSY, CIRCULAR DIN					J4	new part (3/12/93)
88	1	517-1265	CON-F120ST-SKT	CON_120ST_EURO_GAP	CONN, 120 PIN STRAIGHT					J8	
89											
90	1	515-0439	CON-STEREOJACK	CON_515_0431	CONN, STEREO JACK,HPHONE					J2	
91	1	519-0597	CON-F25RT-DB-A	CON_25RT_DBA	CONN, 25 PIN DSUB, RT					J1	new part (4/22/93)
92	1	519-0934	CON-STEREO4	CON_STEREO4	CONN, STEREO JACK,MPHONE,4 LINE, SHIELDED					J3	new part (4/22/93)
alt-92	alt	519-0822	CON-STEREO4	CON_STEREO4	CONN, STEREO JACK,MPHONE,4 LINE, SHIELDED					J3	alternate
93											
94	2	740S0500	FUSE	FUSE_POLY_SMD	FUSE,	0.9AMP				F1,F2	
95	4	805-~~0685~~	TEST-PROBE	TEST_PROBE	GROUND PAD					GC1,GC2,GC3,GC4	new part (4/22/93)
		-0599									
Non-ECS BOM items											

Item #	Qty	Part #	Device Type	Package	Description	Value	Voltage	Wattage	Tolerance	Ref. Designators	
1	1	742-0025	Battery		alt. to 742-0011						
2	2	333-0133	SIMM,VRAM,128Kx8x2, 80ns							stuffed into location J4	
3	2	333-0134	SINN,VRAM,256Kx4x4, 80ns							stuffed into location J4/alt. to 128K x 16 VRAM SIMMs	
4	1	511-0102	Socket, PGA	68040_PGA	Socket, PGA					stuff U2 into	
5	1	820-0464-04	PCB bare board								
											part number changed (5/17/93)

Optimus Main Logic Board BOM v4.1-33MHz

Net Ripper BOM Conversion of: optimus_v20.bom, 4-27-1993 , 15:03

The following items are being excluded:
Ref.Des: ZH?,TP?,W?
Filters are OR

Sorting on: Ref. Des, P/N, Value

Item #	Qty	Part #	Device Type	Package	Description	Value	Voltage	Wattage	Tolerance	Ref. Designators	Comments
1	2	101S1000	RES	RES_0805	RESISTOR,	0				R116,R120	
2	4	101S1102	RES-V	RES_0805	RESISTOR,	100		1/10W		R40,R77,R78,R79	qty increased by 1 (6/14/93)
3	6	101S1103	RES	RES_0805	RESISTOR,	1K		1/10W		R59,R84,R85,R86,R87,R104	qty increased by 3 (6/14/93)
4	7	101S1104	RES-V	RES_0805	RESISTOR,	10K		1/10W		R6,R8,R21,R41,R48,R49,R58	qty increased by 1 (3/15/93)
5	6	101S1105	RES-V	RES_0805	RESISTOR,	100K		1/10W		R35,R63,R64,R65,R67,R68	
6	2	101S1183	RES-V	RES_0805	RESISTOR,	1.8K		1/10W		R98,R133	qty increased by 1 (2/16/93)
7	2	101S1221	RES-V	RES_0805	RESISTOR,	22		1/10W		R60,R136	qty increased by 1 (3/15/93)
8	1	101S1222	RES	RES_0805	RESISTOR,	220		1/10W		R53	
9	2	101S1223	RES-V	RES_0805	RESISTOR,	2.2K		1/10W		R45,R46	new part (2/16/93)
10	12	101S1302	RES-V	RES_0805	RESISTOR,	300		1/10W		R55,R69,R71,R81,R82,R91,R95,R105,R111	new part (2/16/93)
										R117,R121,R137	qty decreased by 3 (6/14/93)
11	1	101S1330	RES-V	RES_0805	RESISTOR,	3.3		1/10W		R92	
12	3	101S1331	RES	RES_0805	RESISTOR,	33		1/10W		R47,R50,R93	new part (5/17/93)
13	1	101S1335	RES-V	RES_0805	RESISTOR,	330K		1/10W		R70	qty Increased by 1 (5/17/93)
14	15	101S1471	RES	RES_0805	RESISTOR,	47		1/10W		R74,R88,R90,R94,R100,R101,R102,R108,R113,R124	
										R127,R130,R131,R132,R135	qty increased by 3 (4/22/93)
15	5	101S1472	RES-V	RES_0805	RESISTOR,	470		1/10W		R34,R37,R56,R57,R61	
16	15	101S1473	RES	RES_0805	RESISTOR,	4.7K		1/10W		R10,R28,R62,R66,R89,R96,R99,R103,R112	qty decreased by 1 (3/15/93)
										R114,R115,R123,R125,R126,R138	qty increased by 2 (3/15/93)
17	29	101S1474	RES-V	RES_0805	RESISTOR,	47K		1/10W		R5,R7,R9,R11,R12,R13,R14,R15,R17	
										R18,R19,R20,R22,R23,R24,R26,R29,R30	qty increased by 4 (6/14/93)
										R31,R32,R33,R36,R38,R39,R42,R43,R44,R51	
										R52	
18	3	101S1475	RES-V	RES_0805	RESISTOR,	470K		1/10W		R27,R72,R107	
19	1	101S1516	RES	RES_0805	RESISTOR,	5.1M		1/10W		R73	
20	3	101S1684	RES	RES_0805	RESISTOR,	68K		1/10W		R1,R2,R3	
21	1	106S1402	RES-V	RES_0805	RESISTOR,	140		1/10W	1%	R80	new part (4/22/93)
22	3	106S4991	RES-V	RES_0805	RESISTOR,	49.9		1/10W	1%	R54,R76,R83	qty decreased by 1 (3/15/93)
23	2	106S5112	RES	RES_0805	RESISTOR,	511		1/10W		R97,R134	qty decreased by 1 (3/15/93)
24	1	106S6191	RES	RES_0805	RESISTOR,	61.9		1/10W	1%	R4	
25	3	108S7501	RES-V	RES_1206	RESISTOR,	75			1%	R122,R128,R129	
26	5	112S0301	RPAK8P	SOI_16M	RPAK, 16 PIN, ISOLATED,	47		1/10W		RP5,RP6,RP7,RP8,RP9	
27	4	112S0406	RPAK16C	SOI_16M	RPAK, 16 PIN, BUSSED,	4.7K		1/20W		RP1,RP2,RP3,RP4	qty decreased by 1 (3/12/93)
28	2	126S1020	CAP-V	CAP_ELECSM_6MM	CAPACITOR, POLARIZED,	100UF	6.3V		20%	C1,C4	
29	10	126S4710	CAP-V	CAP_ELECSM_6MM	CAPACITOR, POLARIZED,	47UF	16V		20%	C2,C5,C8,C11,C12,C13,C15,C16,C17,C29	qty increased by 1 (6/14/93)
30	4	127S1012	CAP-V	CAP_TANTC_SM	CAPACITOR, POLARIZED,	10UF	16V		20%	C3,C7,C25,C26	qty decreased by 1 (6/14/93)
31	4	127S3301	CAP-V	CAP_TANTB_SM	CAPACITOR, POLARIZED,	3.3UF	16V		20%	C6,C9,C10,C14	
32	1	131S1010	CAP-NP-V	CAP_0805	CAPACITOR, NON-POLARIZED,	10PF	50V		10%	C111	
33	12	131S1021	CAP-NP-V	CAP_0805	CAPACITOR, NON-POLARIZED,	100PF	50V		5%	C150,C165,C166,C168,C182,C183,C184,C185,C187,C189	qty decreased by 3 (6/14/93)
										C191,C192	
34	3	131S2220	CAP-NP-V	CAP_0805	CAPACITOR, NON-POLARIZED,	220PF	50V		10%	C64,C96,C116	qty increased by 1 (3/12/93)
35	3	131S3310	CAP-NP-V	CAP_0805	CAPACITOR, NON-POLARIZED,	33PF	50V		10%	C68,C93,C101	qty increased by 1 (6/14/93)
36	5	131S4710	CAP-NP-V	CAP_0805	CAPACITOR, NON-POLARIZED,	47PF	25V		20%	C107,C114,C119,C176,C180	qty increased by 3 (6/14/93)
37	16	131S4720	CAP-NP-V	CAP_0805	CAPACITOR, NON-POLARIZED,	470PF	50V		10%	C47,C48,C49,C52,C53,C57,C59,C60,C62,C67	qty decreased by 8 (6/14/93)
										C71,C75,C76,C77,C78,C79	
38	27	132S1030	CAP-NP-V	CAP_0805	CAPACITOR, NON-POLARIZED,	0.001UF	50V		10%	C19,C30,C35,C39,C40,C41,C42,C43,C44,C81	qty increased by 6 (6/14/93)
										C82,C135,C153,C154,C155,C156,C157,C158,C160,C171	
										C172,C173,C175,C177,C178,C179,C181	
39	57	132S1041	CAP-NP-V	CAP_0805	CAPACITOR, NON-POLARIZED,	0.01UF	50V		10%	C18,C20,C21,C22,C23,C24,C27,C28,C46,C54	qty increased by 9 (6/14/93)
										C55,C56,C65,C66,C69,C70,C72,C80,C83,C85	
										C92,C94,C98,C99,C100,C103,C104,C105,C106,C108	
										C110,C117,C118,C122,C123,C125,C127,C128,C130,C131	
										C134,C136,C138,C139,C141,C145,C146,C149,C152,C161	

										C162,C164,C167,C169,C186,C190,C193	
40	48	132S1053	CAP-NP	CAP_0805	CAPACITOR, NON-POLARIZED,	0.1UF	25V		20%	C31,C32,C33,C34,C36,C37,C38,C45,C50,C51	qty increased by 2 (3/17/93)
										C58,C61,C63,C73,C74,C84,C86,C87,C88,C89	
										C90,C91,C95,C97,C102,C109,C113,C115,C120,C121	
										C124,C126,C129,C132,C133,C137,C140,C142,C143,C144	
										C147,C148,C151,C159,C163,C170,C174,C188	
41	1	138S0303	CAP-NP-V	1206	CAPACITOR, NON-POLARIZED,	3.3UF	50V		10%	C112	
42	2	151S1020	IND		INDUCTOR,	100uH				L1,L2	
43	1	155-0063	LPAK3P	IND_6W450_SM	LPAK, FILTER, 3 LINE,SMD	FERR-1A				LP1	
44	2	155-0064	LPAK4P	IND_8W450_SM	LPAK, FILTER, 4 LINE,SMD	FERR-1A				LP2,LP3	
45	1	155-0070	IND	FERRITE	INDUCTOR	FERRITE BEAD				L3	
46	3	155S0076	IND	IND_0805	INDUCTOR,	100-OHM-EMI				L5,L6,L7	
47	1	159S0002	IND-V	S_IND_FER_217	INDUCTOR,	FERRITE-3A				L4	
48	1	197S0211	CRYSTAL-4PIN-SM	CRY_4PIN_SM	CRYSTAL, 4 PIN,	32.768K				Y1	
49	1	197S0512	OSC	OSC_4PIN_SM	OSCILLATOR, TRI-STATE,	31.3344M				G1	
50	1	291S0002	74HC02-SOI	SOI_14N	IC, 74HC02 QUAD 2-INPUT NOR					U29	
51	1	297S0004	74HCT04-SOI	SOI_14N	IC, 74HCT04 HEX INVERTER					U30	new part (3/17/93)
52	1	299S0000	74F00-SOI	SOI_14N	IC, 74F00 QUAD 2-INPUT NAND					U33	new part (3/17/93)
53	1	299S0074	74F74-SOI-I	SOI_14N	IC, 74F74 DUAL D-TYPE FLIP-FLOP					U32	
54	**1**	**299S0244**	**74F244-SOI-I**	**SOI_20W**	**IC, 74F244 OCTAL TS BUFFER**					**U23**	**qty increase by 1 (3/12/93)**
55	2	315S2630	26LS30-PLC	PLC_20	IC, 26LS30, LINE DRIVER					U3,U8	
56	2	315S2632	26LS32-SOI	SOI_16N	IC, 26LS32, DIF. LINE DRIVER					U4,U5	
57	8	333S1021	DRAM-1MX4-80-SOJ	SOJ_26_OFFSET	DRAM, 1MX4, 80NS, SOJ					U10,U13,U14,U16,U18,U22,U24,U25	
58	1	337-6883	68LC040-33-PGA	PGA_68040	IC, 68LC040 CPU, 33MHZ					U15	part number assigned (4/22/93)
59	1	337S5396	53C96-FLA	FLA_20X30	IC, 53C96					U2	
60	1	337S8532	8530-8-PLC-I	PLC_44	IC, 8530 8MHZ, SCC					U9	
61	1	341S0788	EGRET-SOI	SOI_28W	IC, CUSTOM, CUDA v2.37					U11	**part number changed (6/14/93)**
62	1	341S1062	ROM-256KX16-150-SOI	SOI_40W545	IC, ROM-LO, 256KX16, 150NS					U35	part number assigned (4/22/93)
63	1	341S1063	ROM-256KX16-150-SOI	SOI_40W545	IC, ROM-HI, 256KX16, 150NS					U34	part number assigned (4/22/93)
64	1	343-0129	DFAC-II-PLC	PLC_44	IC, ASIC DIGITALLY FILTERED AUDIO CHIP II					U1	
65	1	343S0120	PWR-MON-LS1176-SOI	SOI_8N	IC, LS1176, POWER MONITOR					U6	
66	1	343S0135	PRIMETIME	FLA_208	IC,PRIMETIME ASIC					U12	part number assigned (3/17/93)
67	1	343S0161	SC11412-CLKGEN	SOI_16W	IC, PROGRAMMABLE FREQ. GENERATOR					U19	part number assigned (4/22/93)
68	1	343S0164	MEMCJR	FLA_160	IC, MEMCJR GATE ARRAY					U17	part number assigned (3/17/93)
69	1	343S1091	AC842-PLC	PLC_68	IC, ANTELOPE, CUSTOM VIDEO CLUT/DAC					U26	
70	2	353S0084	OPAMP-TL084-SOI	SOI_14N	IC, OPAMP TL084,JFET,QUAD					U27,U28	
71	1	353S3468	REG-MC34268-SOI	SOI_8N	VOLTAGE REG, SCSI ACTIVE TERMINATION					U31	
72	1	355S1423	MCCS142235	SOI_24N	SCSI BUS ACTIVE TERMINATOR					U7	
73	1	355S0002	CLK-DR-MC88916-SOI	SOI_20W	IC, MC88920, LOW SKEW CMOS PLL CLOCK DRIVER					U20	**33MHz config only**
74	2	371S0007	DIODE-V	DIO_SMB_SM	DIODE,	MBRS120T3				D1,D2	
75	7	372S3904	TRA-2N3904-SM	TRA_SOT23	TRAN, 2N3904, SM NPN	2N3904				Q1,Q2,Q3,Q4,Q5,Q6,Q10	qty increased by 6 (2/16/93)
76	1	372S3906	TRA-2N3906-SM	TRA_SOT23	TRAN, 2N3906, PNP SM	2N3906				Q7	
77	2	376S0003	TRA-2N2222-SM	TRA_SOT23	TRAN, 2N2222, SM NPN	2N2222				Q8,Q9	
78	1	513-0212	CON-112ST-MICROCHAN	CON_112ST_MICROCHAN	CON, 112PIN MICROCHANNEL 1KEY/1WEB					J9	part number assigned (4/22/93)
79	1	513-0302	CON-FOXCONN	NEW_MLB	CON,MALE,IO,MLB					J14	
80	1	515-0200	CON-M2ST-HDRA	CON_2ST_HDRC	CONN, 2 PIN STRAIGHT HEADER					J7	new part (3/12/93)
81	1	515-1308	CON-4ST-BTRY	CON_4ST_HDRA	CONN,1 ROW,.100 CENTERS					J10	part number assigned (4/22/93)
82	1	517-0711	CON-SIMM-72ST	CON_72ST_SIMM	CONN, 72 PIN SIMM					J12	
83	1	517-0714	CON-8RT-DIN-SHIELD	CON_8RT_DIN_SL	CONN, 8 PIN MINI DIN, SHIELDED,PLATINUM					J5	new part (2/16/93)
84	1	517-0715	CON-4RT-DIN-SHIELD	CON_4RT_DIN_SL	CONN, 4 PIN MINI DIN,SHIELDED,PLATINUM					J6	new part (3/12/93)
85	1	517-0743	CON-SIMM-2X68ST	CON_68X2_SIMM	CONN, 68X2 SIMM					J11	
86	1	517-0745	CON-SIMM-64ST	CON_ROMSIMM	CONN, 64 PIN SIMM SOCKET					J13	
87	1	517-0764	CON-F9RT-DIN	CON_9RT_DIN	CONN, ASSY, CIRCULAR DIN					J4	new part (3/12/93)
88	1	517-1265	CON-F120ST-SKT	CON_120ST_EURO_GAP	CONN, 120 PIN STRAIGHT					J8	
89											
90	1	515-0439	CON-STEREOJACK	CON_515_0431	CONN, STEREO JACK,HPHONE					J2	
91	1	519-0597	CON-F25RT-DB-A	CON_25RT_DBA	CONN, 25 PIN DSUB, RT					J1	new part (4/22/93)
92	1	519-0934	CON-STEREO4	CON_STEREO4	CONN, STEREO JACK,MPHONE,4 LINE, SHIELDED					J3	new part (4/22/93)
alt-92	alt	519-0822	CON-STEREO4	CON_STEREO4	CONN, STEREO JACK,MPHONE,4 LINE, SHIELDED					J3	alternate
93											
94	2	740S0500	FUSE	FUSE_POLY_SMD	FUSE,	0.9AMP				F1,F2	
95	4	805-0595	TEST-PROBE	TEST_PROBE	GROUND PAD					GC1,GC2,GC3,GC4	new part (4/22/93)
Non-ECS BOM items											

Item #	Qty	Part #	Device Type	Package	Description	Value	Voltage	Wattage	Tolerance	Ref. Designators	
1	1	742-0025	Battery		alt. to 742-0011						
2	2	333-0133	SIMM,VRAM,128Kx8x2, 80ns							stuffed into location J4	
3	2	333-0134	SINN,VRAM,256Kx4x4, 80ns							stuffed into location J4/alt. to 128K x 16 VRAM SIMMs	
4	1	511-0102	Socket, PGA	68040_PGA	Socket, PGA					stuff U2 into	
5	1	820-0464-04	PCB bare board								
6	1	600-0043	Heat Sink Assy		Heat Sink for 68LC040, PGA					attach to U15/33MHz configuration only	**33MHz only**
											part number changed (5/17/93)

Optimus Main Logic Board BOM v4.1

Net Ripper BOM Conversion of: optimus_v20.bom, 4-27-1993 , 15:03

The following items are being excluded:
Ref.Des: ZH?,TP?,W?
Filters are OR

Sorting on: Ref. Des, P/N, Value

Item #	Qty	Part #	Device Type	Package	Description	Value	Voltage	Wattage	Tolerance	Ref. Designators	Comments
1	4	101S1000	RES	RES_0805	RESISTOR,	0				R75,R106,R116,R120	**qty increased by 1 (6/14/93)**
2	4	101S1102	RES-V	RES_0805	RESISTOR,	100		1/10W		R40,R77,R78,R79	**qty increased by 3 (6/14/93)**
3	6	101S1103	RES	RES_0805	RESISTOR,	1K		1/10W		R59,R84,R85,R86,R87,R104	qty increased by 1 (3/15/93)
4	7	101S1104	RES-V	RES_0805	RESISTOR,	10K		1/10W		R6,R8,R21,R41,R48,R49,R58	
5	6	101S1105	RES-V	RES_0805	RESISTOR,	100K		1/10W		R35,R63,R64,R65,R67,R68	qty increased by 1 (2/16/93)
6	2	101S1183	RES-V	RES_0805	RESISTOR,	1.8K		1/10W		R98,R133	qty increased by 1 (3/15/93)
7	2	101S1221	RES-V	RES_0805	RESISTOR,	22		1/10W		R60,R136	
8	1	101S1222	RES	RES_0805	RESISTOR,	220		1/10W		R53	new part (2/16/93)
9	2	101S1223	RES-V	RES_0805	RESISTOR,	2.2K		1/10W		R45,R46	new part (2/16/93)
10	14	101S1302	RES-V	RES_0805	RESISTOR,	300		1/10W		R55,R69,R71,R81,R82,R91,R95,R105,R110,R111	**qty decreased by 3 (6/14/93)**
										R117,R119,R121,R137	
11	1	101S1330	RES-V	RES_0805	RESISTOR,	3.3		1/10W		R92	new part (5/17/93)
12	3	101S1331	RES	RES_0805	RESISTOR,	33		1/10W		R47,R50,R93	qty Increased by 1 (5/17/93)
13	1	101S1335	RES-V	RES_0805	RESISTOR,	330K		1/10W		R70	
14	15	101S1471	RES	RES_0805	RESISTOR,	47		1/10W		R74,R88,R90,R94,R100,R101,R102,R108,R113,R124	qty increased by 3 (4/22/93)
										R127,R130,R131,R132,R135	
15	5	101S1472	RES-V	RES_0805	RESISTOR,	470		1/10W		R34,R37,R56,R57,R61	qty decreased by 1 (3/15/93)
16	17	101S1473	RES	RES_0805	RESISTOR,	4.7K		1/10W		R10,R28,R62,R66,R89,R96,R99,R103,R109,R112	qty increased by 2 (3/15/93)
										R114,R115,R118,R123,R125,R126,R138	
17	31	101S1474	RES-V	RES_0805	RESISTOR,	47K		1/10W		R5,R7,R9,R11,R12,R13,R14,R15,R16,R17	**qty increased by 4 (6/14/93)**
										R18,R19,R20,R22,R23,R24,R25,R26,R29,R30	
										R31,R32,R33,R36,R38,R39,R42,R43,R44,R51	
										R52	
18	3	101S1475	RES-V	RES_0805	RESISTOR,	470K		1/10W		R27,R72,R107	
19	1	101S1516	RES	RES_0805	RESISTOR,	5.1M		1/10W		R73	
20	3	101S1684	RES	RES_0805	RESISTOR,	68K		1/10W		R1,R2,R3	
21	1	106S1212	RES-V	RES_0805	RESISTOR,	121		1/10W	1%	R80	new part (4/22/93)/25MHz config only
alt-21	alt	106S1402	RES-V	RES_0805	RESISTOR,	140		1/10W	1%	R80	**new part (6/14/93)/33MHz config only**
22	3	106S4991	RES-V	RES_0805	RESISTOR,	49.9		1/10W	1%	R54,R76,R83	qty decreased by 1 (3/15/93)
23	2	106S5112	RES	RES_0805	RESISTOR,	511		1/10W		R97,R134	qty decreased by 1 (3/15/93)
24	1	106S6191	RES	RES_0805	RESISTOR,	61.9		1/10W	1%	R4	
25	3	108S7501	RES-V	RES_1206	RESISTOR,	75			1%	R122,R128,R129	
26	5	112S0301	RPAK8P	SOI_16M	RPAK, 16 PIN, ISOLATED,	47		1/10W		RP5,RP6,RP7,RP8,RP9	
27	4	112S0406	RPAK16C	SOI_16M	RPAK, 16 PIN, BUSSED,	4.7K		1/20W		RP1,RP2,RP3,RP4	qty decreased by 1 (3/12/93)
28	2	126S1020	CAP-V	CAP_ELECSM_6MM	CAPACITOR, POLARIZED,	100UF	6.3V		20%	C1,C4	
29	10	126S4710	CAP-V	CAP_ELECSM_6MM	CAPACITOR, POLARIZED,	47UF	16V		20%	C2,C5,C8,C11,C12,C13,C15,C16,C17,C29	**qty increased by 1 (6/14/93)**
30	4	127S1012	CAP-V	CAP_TANTC_SM	CAPACITOR, POLARIZED,	10UF	16V		20%	C3,C7,C25,C26	**qty decreased by 1 (6/14/93)**
31	4	127S3301	CAP-V	CAP_TANTB_SM	CAPACITOR, POLARIZED,	3.3UF	16V		20%	C6,C9,C10,C14	
32	1	131S1010	CAP-NP-V	CAP_0805	CAPACITOR, NON-POLARIZED,	10PF	50V		10%	C111	
33	12	131S1021	CAP-NP-V	CAP_0805	CAPACITOR, NON-POLARIZED,	100PF	50V		5%	C150,C165,C166,C168,C182,C183,C184,C185,C187,C189	**qty decreased by 3 (6/14/93)**
										C191,C192	
34	3	131S2220	CAP-NP-V	CAP_0805	CAPACITOR, NON-POLARIZED,	220PF	50V		10%	C64,C96,C116	qty increased by 1 (3/12/93)
35	3	131S3310	CAP-NP-V	CAP_0805	CAPACITOR, NON-POLARIZED,	33PF	50V		10%	C68,C93,C101	**qty increased by 1 (6/14/93)**
36	5	131S4710	CAP-NP-V	CAP_0805	CAPACITOR, NON-POLARIZED,	47PF	25V		20%	C107,C114,C119,C176,C180	**qty increased by 3 (6/14/93)**
37	16	131S4720	CAP-NP-V	CAP_0805	CAPACITOR, NON-POLARIZED,	470PF	50V		10%	C47,C48,C49,C52,C53,C57,C59,C60,C62,C67	**qty decreased by 8 (6/14/93)**
										C71,C75,C76,C77,C78,C79	
38	27	132S1030	CAP-NP-V	CAP_0805	CAPACITOR, NON-POLARIZED,	0.001UF	50V		10%	C19,C30,C35,C39,C40,C41,C42,C43,C44,C81	**qty increased by 6 (6/14/93)**
										C82,C135,C153,C154,C155,C156,C157,C158,C160,C171	
										C172,C173,C175,C177,C178,C179,C181	
39	57	132S1041	CAP-NP-V	CAP_0805	CAPACITOR, NON-POLARIZED,	0.01UF	50V		10%	C18,C20,C21,C22,C23,C24,C27,C28,C46,C54	**qty increased by 9 (6/14/93)**
										C55,C56,C65,C66,C69,C70,C72,C80,C83,C85	
										C92,C94,C98,C99,C100,C103,C104,C105,C106,C108	
										C110,C117,C118,C122,C123,C125,C127,C128,C130,C131	

										C134,C136,C138,C139,C141,C145,C146,C149,C152,C161	
										C162,C164,C167,C169,C186,C190,C193	
40	48	132S1053	CAP-NP	CAP_0805	CAPACITOR, NON-POLARIZED,	0.1UF	25V		20%	C31,C32,C33,C34,C36,C37,C38,C45,C50,C51	qty increased by 2 (3/17/93)
										C58,C61,C63,C73,C74,C84,C86,C87,C88,C89	
										C90,C91,C95,C97,C102,C109,C113,C115,C120,C121	
										C124,C126,C129,C132,C133,C137,C140,C142,C143,C144	
										C147,C148,C151,C159,C163,C170,C174,C188	
41	1	138S0303	CAP-NP-V	1206	CAPACITOR, NON-POLARIZED,	3.3UF	50V		10%	C112	
42	2	151S1020	IND		INDUCTOR,	100uH				L1,L2	
43	1	155-0063	LPAK3P	IND_6W450_SM	LPAK, FILTER, 3 LINE,SMD	FERR-1A				LP1	
44	2	155-0064	LPAK4P	IND_8W450_SM	LPAK, FILTER, 4 LINE,SMD	FERR-1A				LP2,LP3	
45	1	155-0070	IND	FERRITE	INDUCTOR	FERRITE BEAD				L3	
46	3	155S0076	IND	IND_0805	INDUCTOR,	100-OHM-EMI				L5,L6,L7	
47	1	159S0002	IND-V	S_IND_FER_217	INDUCTOR,	FERRITE-3A				L4	
48	1	197S0211	CRYSTAL-4PIN-SM	CRY_4PIN_SM	CRYSTAL, 4 PIN,	32.768K				Y1	
49	1	197S0512	OSC	OSC_4PIN_SM	OSCILLATOR, TRI-STATE,	31.3344M				G1	
50	1	291S0002	74HC02-SOI	SOI_14N	IC, 74HC02 QUAD 2-INPUT NOR					U29	new part (3/17/93)
51	1	297S0004	74HCT04-SOI	SOI_14N	IC, 74HCT04 HEX INVERTER					U30	new part (3/17/93)
52	1	299S0000	74F00-SOI	SOI_14N	IC, 74F00 QUAD 2-INPUT NAND					U33	
53	1	299S0074	74F74-SOI-I	SOI_14N	IC, 74F74 DUAL D-TYPE FLIP-FLOP					U32	qty increase by 1 (3/12/93)
54	2	299S0244	74F244-SOI-I	SOI_20W	IC, 74F244 OCTAL TS BUFFER					U21,U23	
55	2	315S2630	26LS30-PLC	PLC_20	IC, 26LS30, LINE DRIVER					U3,U8	
56	2	315S2632	26LS32-SOI	SOI_16N	IC, 26LS32, DIF. LINE DRIVER					U4,U5	
57	8	333S1021	DRAM-1MX4-80-SOJ	SOJ_26_OFFSET	DRAM, 1MX4, 80NS, SOJ					U10,U13,U14,U16,U18,U22,U24,U25	part number assigned (4/22/93)
58	1	337-6881	68LC040-20-PGA	PGA_68040	IC, 68LC040 CPU, 25MHZ					U15	
59	1	337S5396	53C96-FLA	FLA_20X30	IC, 53C96					U2	
60	1	337S8532	8530-8-PLC-I	PLC_44	IC, 8530 8MHZ, SCC					U9	**part number changed (6/14/93)**
61	1	341S0788	EGRET-SOI	SOI_28W	IC, CUSTOM, CUDA v2.37					U11	part number assigned (4/22/93)
62	1	341S1062	ROM-256KX16-150-SOI	SOI_40W545	IC, ROM-LO, 256KX16, 150NS					U35	part number assigned (4/22/93)
63	1	341S1063	ROM-256KX16-150-SOI	SOI_40W545	IC, ROM-HI, 256KX16, 150NS					U34	
64	1	343-0129	DFAC-II-PLC	PLC_44	IC, ASIC DIGITALLY FILTERED AUDIO CHIP II					U1	
65	1	343S0120	PWR-MON-LS1176-SOI	SOI_8N	IC, LS1176, POWER MONITOR					U6	part number assigned (3/17/93)
66	1	343S0135	PRIMETIME	FLA_208	IC,PRIMETIME ASIC					U12	part number assigned (4/22/93)
67	1	343S0161	SC11412-CLKGEN	SOI_16W	IC, PROGRAMMABLE FREQ. GENERATOR					U19	part number assigned (3/17/93)
68	1	343S0164	MEMCJR	FLA_160	IC, MEMCJR GATE ARRAY					U17	
69	1	343S1091	AC842-PLC	PLC_68	IC, ANTELOPE, CUSTOM VIDEO CLUT/DAC					U26	
70	2	353S0084	OPAMP-TL084-SOI	SOI_14N	IC, OPAMP TL084,JFET,QUAD					U27,U28	
71	1	353S3468	REG-MC34268-SOI	SOI_8N	VOLTAGE REG, SCSI ACTIVE TERMINATION					U31	
72	1	355S1423	MCCS142235	SOI_24N	SCSI BUS ACTIVE TERMINATOR					U7	**new part (3/12/93)/25MHz config only**
73	1	359S0021	CLK-DR-MC88920-SOI	SOI_20W	IC, MC88920, LOW SKEW CMOS PLL CLOCK DRIVER					U20	**33MHz config only**
alt-73	alt	355S0002	CLK-DR-MC88916-SOI	SOI_20W	IC, MC88920, LOW SKEW CMOS PLL CLOCK DRIVER					U20	
74	2	371S0007	DIODE-V	DIO_SMB_SM	DIODE,	MBRS120T3				D1,D2	qty increased by 6 (2/16/93)
75	7	372S3904	TRA-2N3904-SM	TRA_SOT23	TRAN, 2N3904, SM NPN	2N3904				Q1,Q2,Q3,Q4,Q5,Q6,Q10	
76	1	372S3906	TRA-2N3906-SM	TRA_SOT23	TRAN, 2N3906, PNP SM	2N3906				Q7	
77	2	376S0003	TRA-2N2222-SM	TRA_SOT23	TRAN, 2N2222, SM NPN	2N2222				Q8,Q9	part number assigned (4/22/93)
78	1	513-0212	CON-112ST-MICROCHAN	CON_112ST_MICROCHAN	CON, 112PIN MICROCHANNEL 1KEY/1WEB					J9	
79	1	513-0302	CON-FOXCONN	NEW_MLB	CON,MALE,IO,MLB					J14	new part (3/12/93)
80	1	515-0200	CON-M2ST-HDRA	CON_2ST_HDRC	CONN, 2 PIN STRAIGHT HEADER					J7	part number assigned (4/22/93)
81	1	515-1308	CON-4ST-BTRY	CON_4ST_HDRA	CONN,1 ROW,.100 CENTERS					J10	
82	1	517-0711	CON-SIMM-72ST	CON_72ST_SIMM	CONN, 72 PIN SIMM					J12	new part (2/16/93)
83	1	517-0714	CON-8RT-DIN-SHIELD	CON_8RT_DIN_SL	CONN, 8 PIN MINI DIN, SHIELDED,PLATINUM					J5	new part (3/12/93)
84	1	517-0715	CON-4RT-DIN-SHIELD	CON_4RT_DIN_SL	CONN, 4 PIN MINI DIN,SHIELDED,PLATINUM					J6	
85	1	517-0743	CON-SIMM-2X68ST	CON_68X2_SIMM	CONN, 68X2 SIMM					J11	
86	1	517-0745	CON-SIMM-64ST	CON_ROMSIMM	CONN, 64 PIN SIMM SOCKET					J13	new part (3/12/93)
87	1	517-0764	CON-F9RT-DIN	CON_9RT_DIN	CONN, ASSY, CIRCULAR DIN					J4	
88	1	517-1265	CON-F120ST-SKT	CON_120ST_EURO_GAP	CONN, 120 PIN STRAIGHT					J8	
89											
90	1	515-0439	CON-STEREOJACK	CON_515_0431	CONN, STEREO JACK,HPHONE					J2	new part (4/22/93)
91	1	519-0597	CON-F25RT-DB-A	CON_25RT_DBA	CONN, 25 PIN DSUB, RT					J1	**new part (4/22/93)**
92	1	519-0934	CON-STEREO4	CON_STEREO4	CONN, STEREO JACK,MPHONE,4 LINE, SHIELDED					J3	alternate
alt-92	alt	519-0822	CON-STEREO4	CON_STEREO4	CONN, STEREO JACK,MPHONE,4 LINE, SHIELDED					J3	
93	1	705-0193	SWI-KEYTYPE-V	SWI_KEYTYPE	SWITCH, KEYTYPE					S1	
94	2	740S0500	FUSE	FUSE_POLY_SMD	FUSE,	0.9AMP				F1,F2	new part (4/22/93)
95	4	805-0595	TEST-PROBE	TEST_PROBE	GROUND PAD					GC1,GC2,GC3,GC4	

Non-ECS BOM items											
Item #	**Qty**	**Part #**	**Device Type**	**Package**	**Description**	**Value**	**Voltage**	**Wattage**	**Tolerance**	**Ref. Designators**	
1	1	742-0025	Battery		alt. to 742-0011						
1-alt.	alt.	742-0011	Battery, 3.6 volts							BT1	part number added (4/23/93)
1-alt.	alt.	520-0344	Battery Cover								
1-alt.	alt.	517-1480	BATTERY-V	$BAT_HLDR_HAA	BATTERY,	3.6V				BT1	
2	2	333-0133	SIMM,VRAM,128Kx8x2, 80ns							stuffed into location J4	
3	2	333-0134	SINN,VRAM,256Kx4x4, 80ns							stuffed into location J4/alt. to 128K x 16 VRAM SIMMs	
4	1	PN-	FLASH ROM SIMM, 1MB		alt. to SOIC ROMs.					stuff into J2	
5	1	511-0102	Socket, PGA	68040_PGA	Socket, PGA					stuff U2 into	
6	1	820-0464-04	PCB bare board								**33MHz only**
7	1	600-0043	Heat Sink Assy		Heat Sink for 68LC040, PGA					attach to U15/33MHz configuration only	part number changed (5/17/93)
Components deleted from previous version											
Date	**Qty**	**Part #**	**Device Type**	**Package**	**Description**	**Value**	**Voltage**	**Wattage**	**Tolerance**	**Ref. Designators**	
2/16/93	1	517-0822	CON-SIMM-72ST	CON_72ST_SIMM	CONN, 72 PIN SIMM Low profile					J2	**Comments**
											changed to vertical conn.
3/12/93	2	101S1563	RES	RES_0805	RESISTOR	5.6K		1/10W		R75,R79	
3/15/93	1	101S1153	RES-V	RES_0805	RESISTOR	1.8K		1/10W		R29	BOM consolidation
3/15/93	1	101S1332	RES	RES_0805	RESISTOR,	330		1/10W		R5	BOM consolidation
3/15/93	1	101S1512	RES	RES_0805	RESISTOR,	510		1/10W		R23	BOM consolidation
3/15/93	2	101S1563	RES	RES_0805	RESISTOR,	5.6K		1/10W		R75,R79	BOM consolidation
3/15/93	1	106S3652	RES-V	RES_0805	RESISTOR,	365		1/10W	1%	R13	BOM consolidation
3/15/93	1	131S0023	CAP-NP-V	CAP_0805	CAPACITOR, NON-POLARIZED,	300PF	50V		5%	C132	BOM consolidation
3/12/93	1	299S0113	74F113-1	SOG_14	IC,74F113,DUAL JK NEG FLIP FLOP					U14	BOM consolidation
3/12/93	1	517-0541	CON-8RT-DIN-SHIELD	CON_8RT_DIN_SL	CONN, 8 PIN MINI DIN, SHIELDED,PLATINUM					J11	Removed second clock option
3/12/93	1	517-0542	CON-4RT-DIN-SHIELD	CON_4RT_DIN_SL	CONN, 4 PIN MINI DIN,SHIELDED,PLATINUM					J14	changed to snap-in mini-DINs
											changed to snap-in mini-DINs
4/23/93	1	106S9531	RES-V	RES_0805	RESISTOR,	95.3		1/10W	1%	R71	
4/23/93	2	335S0258	ROM-256Kx16-150-SOI	SOI_40W545	IC, ROM, 256Kx16, 150NS					U34,U35	value changed to 121 ohms
4/23/93	1	515-0439	CON-STEREOJACK	CON_515_0431	CONN, STEREO JACK					J2	part number assigned for HI and LO
4/23/93	1	519-0822	CON-STEREO4	CON_STEREO4	CONN, STEREO JACK, 4 LINE, SHIELDED					J3	changed to snap-in version
4/23/93	4	805-0599	TEST PROBE	TEST_PROBE	GROUND PAD					GC1,GC2,GC3,GC4	changed to part without top shielding
4/27/93	0	600-0423	HSNK/Clip assy		Heat sink and clip assembly					add to '040	part number changed
											part number changed (4/23/93)
5/17/93	1	101S1101	RES	RES_0805	RESISTOR,	10		1/10W		R88	
5/17/93	1	101S1560	RES-V	RES_0805	RESISTOR,	5.6		1/10W		R86	