CR-1

1. ALL RESISTANCE VALUES ARE IN OHMS, 0.1 WATT +/- 5%.
2. ALL CAPACITANCE VALUES ARE IN MICROFARADS.
3. ALL CRYSTALS & OSCILLATOR VALUES ARE IN HERTZ.

REV	ZONE	ECN	DESCRIPTION OF CHANGE	CK APPD / DATE	ENG APPD / DATE
D		263648	PRODUCTION RELEASED		02/26/03
			5/19/03 A RFA# 276257 ENGR RELEASE		
			5/23/03 B		

Q26B DVT MLB
GEN X
REV B

LAST_MODIFIED=Wed May 28 20:14:31 2003

TABLE OF CONTENTS

PAGE	TABLE OF CONTENTS
1	COVER PAGE
2,3	BLOCK DIAGRAM, SYSTEM, POWER & PCB INFO
4,5	MPC7450 MAXBUS
6,7	CPU SPEED & CONFIG OPTIONS
8	BOOTBANGER
9	CPU LA CONNECTORS, ESP, CPU BYPASS
10	CLOCKS
11	INTREPID MAX IF (SECTION 1)
12,13	INTREPID POWER & BYPASS (SECTION 8 & 9)
14	INTREPID DDR CONTROL
15	DDR MUXES
16,17	SO-DIMM, BIG DIMM
18	INTREPID AGP (SECTION 3)
19	NVIDIA AGP (SECTION 1)
20	NVIDIA FRAME BUFFER (SECTIONS 3 & 4)
21	NVIDIA FB SERIES TERMS, CLK DELAYS
22,23	GRAPHICS MEMORIES
24,25	NVIDIA DAC/DVI, CLOCKS & STRAPS (SECTIONS 2 & 5)
26,27	TMDS & EXTERNAL VGA CONNECTORS
28,29	NVIDIA POWER-ON RESET CONFIGURATION STRAPS
30	INTREPID GPIOS, INTERRUPTS & SERIAL PORTS (SECTION 6)
31	MODEM, BLUETOOTH, KITCHEN SINK & SERIAL DOWNLOAD
32	INTREPID PCI, ROM (SECTION 7)
33	WIRELESS PCI
34	USB2 CONTROLLER
35	USB POWER & CONNECTORS
36	INTREPID ETHERNET & FIREWIRE (SECTION 4)
37	ETHERNET PHY
38	FIREWIRE PHY
39	INTREPID UATA/IDE (SECTION 5)
40	ATA CD/HD CONNECTORS
41	AUDIO CODEC & VOLTAGE REGS
42,43	LINE IN/OUT BUFFERS
44,45	SPEAKER/MIC AMPS
46	POWER MANAGER UNIT
47-53	+5V/+12V, AUDIO, FW & TMDS POWER CONVERTERS
54-61	CONSTRAINT TABLES
62-66	NET TABLES
67-74	PART TABLES

POWER RAIL DEFINITIONS

	RUN	SLEEP	SHUTDOWN
+2_5V_MAIN	ON	ON	OFF
+3V_MAIN	ON	ON	OFF
+5V_MAIN	ON	ON	OFF
+5V_SLEEP	ON	OFF	OFF
+12V_MAIN	ON	ON	ON
+12V_SLEEP	ON	OFF	OFF
FW_PWR	ON	ON	OFF
+1.8V_SLEEP	ON	OFF	OFF
+MAXBUS_SLEEP	ON	OFF	OFF

SCHEMATIC AND PCB SUPPORT

PART NUMBER	QTY	DESCRIPTION	REFERENCE DES	CRITICAL	BOM OPTION
051-6490	1	SCHEM,MLB,Q26A,GENX	SCH1	CRITICAL	
820-1501	1	PCB,MLB,IMACG4	PCB1	CRITICAL	
825-2029	1	LBL,SER #,BARCODE	PCB1		
056-1158	1	DESIGN GUIDE,MCO,IMACG4	PCB1	CRITICAL	
057-0040	1	DFM,PNLZN DWG,MLB,Q26	PCB1	CRITICAL	
630-4745	1	630-4745,PCBA,H,Q26A,EEE PRR	HYNIX		OMIT
630-4746	1	630-4746,PCBA,S,Q26A,EEE PRS	SAMSUNG		OMIT

DIMENSIONS ARE IN MILLIMETERS
XX : _____
X.XX : _____
X.XXX : _____
ANGLES : _____
DO NOT SCALE DRAWING

THIRD ANGLE PROJECTION

METRIC

DRAFTER		DESIGN CK	
ENG APPD		MFG APPD	
QA APPD		DESIGNER	
RELEASE		SCALE	NONE

MATERIAL/FINISH NOTED AS APPLICABLE

SIZE D

Apple Computer Inc.

NOTICE OF PROPRIETARY PROPERTY

THE INFORMATION CONTAINED HEREIN IS THE PROPRIETARY PROPERTY OF APPLE COMPUTER, INC. THE POSSESSOR AGREES TO THE FOLLOWING

I TO MAINTAIN THE DOCUMENT IN CONFIDENCE
II NOT TO REPRODUCE OR COPY IT
III NOT TO REVEAL OR PUBLISH IN WHOLE OR PART

TITLE
SCHEM,MLB,Q26,GEN X

DRAWING NUMBER 051-6490 REV. A

SHT 1 OF 74

DRAWING

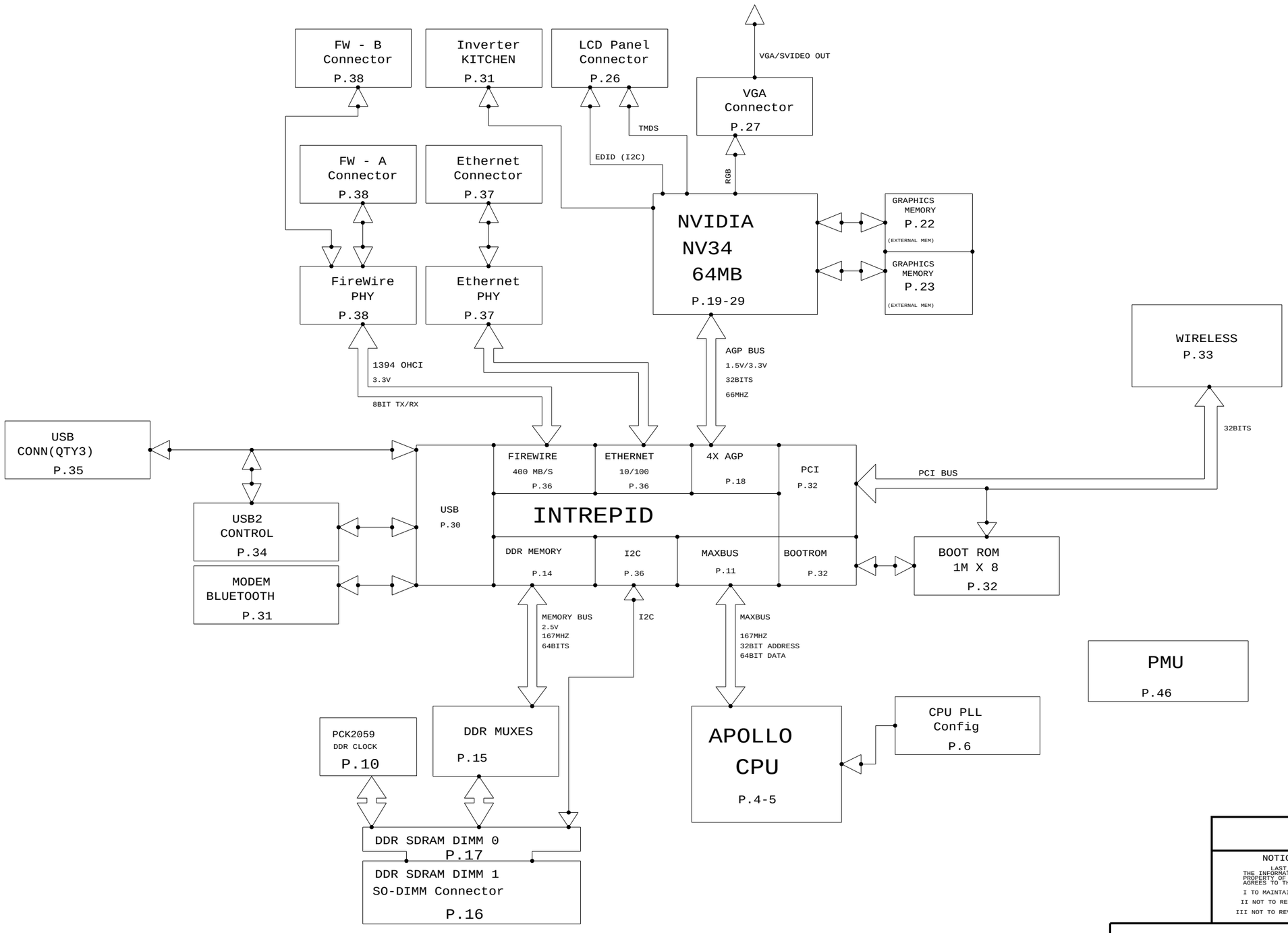

SYSTEM BLOCK

NOTICE OF PROPRIETARY PROPERTY

LAST MODIFIED=Wed May 28 20:12:20 2003
THE INFORMATION CONTAINED HEREIN IS THE PROPRIETARY PROPERTY OF APPLE COMPUTER, INC. THE POSSESSOR AGREES TO THE FOLLOWING

I TO MAINTAIN THE DOCUMENT IN CONFIDENCE

II NOT TO REPRODUCE OR COPY IT

III NOT TO REVEAL OR PUBLISH IN WHOLE OR PART

APPLE COMPUTER INC.

SIZE	DRAWING NUMBER	REV.
D	051-6490	A

SCALE	SHT	OF
NONE	2	74

DRAWING

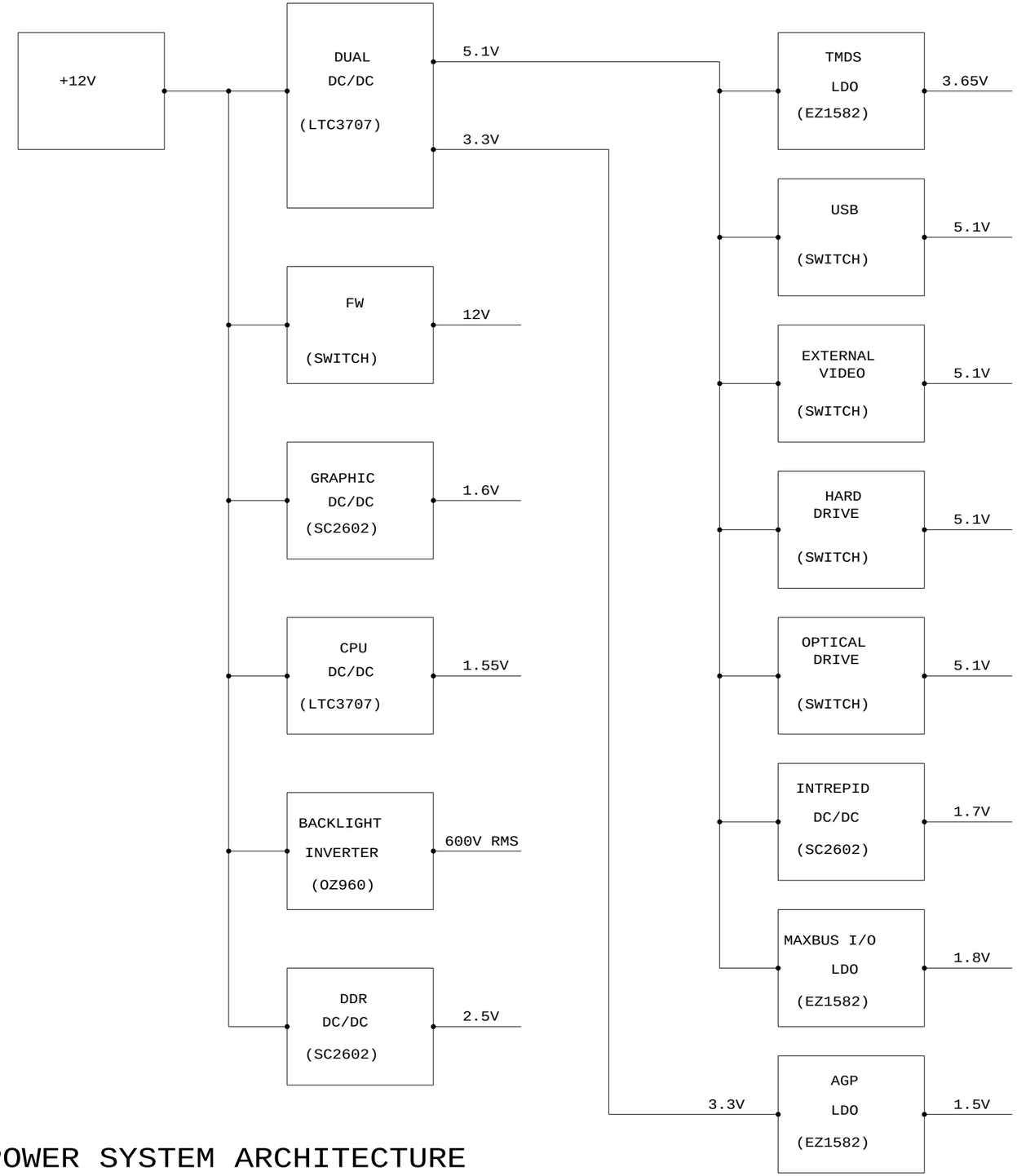

LAYER	THICKNESS (MILS)	COPPER (OZ)	TRACE WIDTH (MILS)
1 - SIGNAL-TOP	0.7	0.5	4
PREPREG	3	---	
2 - GROUND1	1.4	1	---
PREPREG	3	---	
3 - SIGNAL	0.7	0.5	4
FILLER	17.4	---	
4 - POWER	2.8	2	---
PREPREG	4	---	
5 - POWER	2.8	2	---
FILLER	17.4	---	
6 - SIGNAL	0.7	0.5	4
PREPREG	3	---	
7 - GROUND2	1.4	1	---
PREPREG	3	---	
8 - SIGNAL-BOTTOM	0.7	0.5	4
TOTAL	62.0	---	---

POWER SYSTEM ARCHITECTURE

PWR BLOCK,PCB INFO

NOTICE OF PROPRIETARY PROPERTY
LAST MODIFIED=Wed May 28 20:12:21 2003
THE INFORMATION CONTAINED HEREIN IS THE PROPRIETARY PROPERTY OF APPLE COMPUTER, INC. THE POSSESSOR AGREES TO THE FOLLOWING
I TO MAINTAIN THE DOCUMENT IN CONFIDENCE
II NOT TO REPRODUCE OR COPY IT
III NOT TO REVEAL OR PUBLISH IN WHOLE OR PART

APPLE COMPUTER INC.

SIZE	DRAWING NUMBER	REV.
D	051-6490	A
SCALE: NONE	SHT 3 OF 74	

DRAWING

CR-4

CPU INTERNAL PLL FILTERING

61D7 61B4 54C6 47C1 47B3 9C2 9B6 4D3

CPU_VCORE_SLEEP

RB91 470 5% 1/16W MF 402

+MAXBUS_SLEEP

48D4 54C6 61C7
6D8 7A3 7B3 7C3 7C5 7C7 8D3 9B2
9D2 9D4 11B8 11D8 46B7 46D1 46D2 47D2

VDD H8 H10 H12 J7 J9 J11 J13 K8 K10 K12 K14 L7 L9 L11 L13 M8 M10 M12

OVDD B4 C2 C12 D5 E10 F2 G10 H3 J5 K2 L5 M3 M8 P2 P8 P11 R4 R13 R15 T6 T9 T13 U3 U12 U16 V4 V7 V10 V14

AVDD R8

CPU_VCORE_SLEEP 4D7 9B6 9C2 47B3 47C1 54C6 61B4 61D7

R901 10 1% 1/16W MF 603

54C6 CPU_AVDD

C1036 0.1UF 20% 10V CERM 402

C1035 2.2UF 20% 10V CERM 805

BR*, BG*, TS*

58D3 11D3 9C5 7C7 CPU_BR_L D2 BR*
58D3 11D3 9B5 7B7 CPU_BG_L K1 BG*

58D3 11D3 9C7 7C7 CPU_TS_L L4 TS*

A0–A35

7C5 4A3 CPU_PULLDOWN E11 A0
H1 A1
C11 A2
G3 A3

58D3 11D3 9C5 CPU_ADDR<0> F10 A4
58D3 11D3 9C6 CPU_ADDR<1> L2 A5
58D3 11D3 9C5 CPU_ADDR<2> D11 A6
58D3 11D3 9B8 CPU_ADDR<3> D3 A7
58D3 11D3 9C6 CPU_ADDR<4> C10 A8
58D3 11D3 9B7 CPU_ADDR<5> G2 A9
58D3 11D3 9C5 CPU_ADDR<6> D12 A10
58D3 11D3 9B7 CPU_ADDR<7> L3 A11
58D3 11C3 9C6 CPU_ADDR<8> G4 A12
58D3 11C3 9B8 CPU_ADDR<9> T2 A13
58D3 11C3 9B8 CPU_ADDR<10> F4 A14
58D3 11C3 9C5 CPU_ADDR<11> V3 A15
58D3 11C3 9B7 CPU_ADDR<12> J4 A16
58D3 11C3 9B8 CPU_ADDR<13> R2 A17
58D3 11C3 9B7 CPU_ADDR<14> K5 A18
58D3 11C3 9C7 CPU_ADDR<15> W2 A19
58D3 11C3 9B8 CPU_ADDR<16> J2 A20
58D3 11C3 9C8 CPU_ADDR<17> K4 A21
58D3 11C3 9C8 CPU_ADDR<18> N4 A22
58D3 11C3 9B7 CPU_ADDR<19> J3 A23
58D3 11C3 9B8 CPU_ADDR<20> M5 A24
58D3 11C3 9C7 CPU_ADDR<21> P5 A25
58D3 11C3 9C7 CPU_ADDR<22> N3 A26
58D3 11C3 9C8 CPU_ADDR<23> T3 A27
58D3 11C3 9C7 CPU_ADDR<24> V2 A28
58D3 11C3 9C8 CPU_ADDR<25> U3 A29
58D3 11C3 9C8 CPU_ADDR<26> N5 A30
58D3 11C3 9C8 CPU_ADDR<27> W3 A31
58D3 11C3 9C7 CPU_ADDR<28> B12 A32
58D3 11C3 9C8 CPU_ADDR<29> C4 A33
58D3 11C3 9C7 CPU_ADDR<30> G16 A34
58D3 11C3 9C7 CPU_ADDR<31> B11 A35

AP0–AP4

NC_CPUAP<0> C5 AP0
NC_CPUAP<1> E3 AP1
NC_CPUAP<2> H6 AP2
NC_CPUAP<3> F5 AP3
NC_CPUAP<4> G7 AP4

TT0–TT4, TBST*, TSIZ0–TSIZ2, GBL*, WT*, CI*, AACK*, ARTRY*, SHD0*, SHD1*, HIT*

58D3 11B3 9C5 7A7 CPU_TT<0> E5 TT0
58D3 11B3 9C6 7A7 CPU_TT<1> E6 TT1
58D3 11B3 9B5 7A7 CPU_TT<2> F6 TT2
58D3 11B3 9B6 7A7 CPU_TT<3> E8 TT3
58D3 11B3 9C5 7A7 CPU_TT<4> C6 TT4
58D3 11B3 9B5 7B7 CPU_TBST_L F11 TBST*
58D3 11B3 9B6 CPU_TSIZ<0> G6 TSIZ0
58D3 11B3 9C6 CPU_TSIZ<1> F7 TSIZ1
58D3 11B3 9B7 CPU_TSIZ<2> E7 TSIZ2
GBL*
58C3 11B3 9B6 7A7 CPU_WT_L D3 WT*
58C3 11C3 9C6 7A7 CPU_CI_L J1 CI*
58C3 11B3 9B6 7B7 CPU_AACK_L R1 AACK*
58C3 11B3 9B8 7C7 CPU_ARTRY_L N2 ARTRY*
7B5 CPU_SHD0_L E4 SHD0*
7B5 CPU_SHD1_L H5 SHD1*
58C3 11B3 9B8 7C7 CPU_HIT_L B2 HIT*

INT_V2 R311 5% 1/16W MF 402

11C3 7B7 58C3 CPU_INT_GBL_L

58C3 9B6 CPU_GBL_L

INT_V1 R312 100 1% 1/16W MF 402

U34
800MHZ
APOLLO_MPC7445_360
BGA
(1 OF 3)
SEE_TABLE

GND B5 C7 D6 D13 E17 F3 G17 H4 H7 H9 H11 H13 J6 J8 J10 J12 K7 K9 K11 K13 L6 L8 L10 L12 M4 M7 M9 M11 M13 N7 P3 P6 P12 P15 R6 R14 R17 T7 T10 U5 U13 U17 V5 V8 V11 V15

BVSEL, SYSCLK, CLKOUT, PLLCFG0–3, PLL_EXT, DBG*, DRDY*, DTI0–3

BVSEL B7 CPU_BUS_VSEL 7C4

SYSCLK A10 SYSCLK_CPU 11A4 58C3

CLKOUT H2 NO_TEST NC_CPU_CLKOUT

PLLCFG0 B8 CPU_PLL_CFG<0> 6C6 9A8
PLLCFG1 C8 CPU_PLL_CFG<1> 6C6 9A8
PLLCFG2 C7 CPU_PLL_CFG<2> 6C6 9A8
PLLCFG3 D7 CPU_PLL_CFG<3> 6C6 9A8
PLL_EXT A7 CPU_PLL_CFGEXT 6C6 9A8

NOSTUFF RB95 47 5% 1/16W MF 402

RC GLITCH FILTER
PLACE CLOSE TO PIN

DBG* K2 CPU_DBG_L 7B7 9C8 11B1 58C3

DRDY* E3 58C3 CPU_DRDY_L_UF

RB50 0 5% 1/16W MF 402

CPU_DRDY_L 7B7 9B6 11B1 58C3

NOSTUFF C954 10PF 5% 50V CERM 402

FILTERS A WAKE FROM SLEEP GLITCH IF NECESSARY

DTI0 G1 CPU_EDTI 7C5
DTI1 K1 CPU_DTI<0> 9B7 11A1 58C3
DTI2 P1 CPU_DTI<1> 9B5 11A1 58C3
DTI3 N1 CPU_DTI<2> 9B5 11A1 58C3

TDI, TDO, TMS, TCK, TRST*, LSSDMODE*, L1TSTCLK, L2TSTCLK

TDI B9 JTAG_CPU_TDI 7A5 8D2 9A2 61C7
TDO A4 JTAG_CPU_TDO 9A2 61C7
TMS F1 JTAG_CPU_TMS 7A5 8D2 9A2 61C7
TCK C6 JTAG_CPU_TCK 7D5 8C2 9A2 61C7
TRST* A5 JTAG_CPU_TRST_L 7C5 8D2 9A2 61C7
LSSDMODE* E8 CPU_LSSD_MODE 7B5
L1TSTCLK G8 CPU_L1TSTCLK 7A4
L2TSTCLK B3 CPU_L2TSTCLK 7C4

TA*, TEA*

TA* K6 CPU_TA_L 7C7 9C5 11A1 58C3
TEA* L1 CPU_TEA_L 7B7 9C6 11A1 58C3

TBEN, QREQ*, QACK*, CKSTP_IN*, CKSTP_OUT*

TBEN E1 CPU_TBEN 7C5 11A3
QREQ* C4 CPU_QREQ_L 7D5 9B7 11B3 58C3
QACK* C5 CPU_QACK_L 9B5 11B3 58C3
CKSTP_IN* K3 CPU_CHKSTP_IN_L 7B5 61C7
CKSTP_OUT* B1 CPU_CHKSTP_OUT_L 7B5 9A2 9D6 61C7

INT*, SMI*, MCP*, SRESET*, HRESET*

INT* D4 MPIC_CPU_INT_L 7A5 9D7 30B5
SMI* F9 CPU_SMI_L 7A5 46C4
MCP* C9 CPU_MCP_L 7B5
SRESET* C2 CPU_SRESET_L 7A5 9A2 61C4
HRESET* D8 CPU_HRESET_L 7A3 7A5 7B3 8D2 9A2 46C2 46D2 61C7

IBORG PULLS THIS UP, SPEC SAYS TO GROUND IT FOR SW CONTROL

PMON_IN*, PMON_OUT*, BMODE0*, BMODE1*, EXT_QUAL, TEST0–4

PMON_IN* D9 CPU_PMONIN_L 7C5
PMON_OUT* A9 NO_TEST NC_PMON_OUT_L

BMODE0* C9 CPU_EMODE0_L 7A4
BMODE1* F8 CPU_EMODE1_L 7A4

EXT_QUAL A11

TEST0 A12
TEST1 B6
TEST2 B10
TEST3 E10 CPU_PULLUP 7A5
TEST4 D10 CPU_PULLDOWN 4D7 7C5

ZH4 275R138 ZT9P1 C352 0.1UF 20% 10V CERM 402

ZH5 TH SL-138X272-292 ZT11P1 C345 0.1UF 20% 10V CERM 402

ZH6 TH SL-138X272-292 ZT10P1 C369 0.1UF 20% 10V CERM 402

ZH7 275R138 ZT8P1 C370 0.1UF 20% 10V CERM 402

INTREPID VERSION 1 PULLS GBL
ALL THE TIME. NEED TO
CUT THE TRACE AND YANK
DOWN HARD FOR SNOOPING.
FIXED IN INTREPID VERSION 2.

CPU MECHANICAL PARTS SUPPORT

PART NUMBER	QTY	DESCRIPTION	REFERENCE DES	CRITICAL	BOM OPTION
875-1475	1	PAD,THERMAL,CPU,U34	U341	CRITICAL	
870-1113	1	HEAT SINK,CPU,Q26,U34	U342	CRITICAL	DEV
870-1114	1	CLIP,HEAT SINK,CPU,Q26.U34	U343	CRITICAL	DEV
412-0042	1	SCREW,MACH,3MM W,8MM L,U34	U344	CRITICAL	DEV
835-0251	1	NUT,3MM,U34	U345	CRITICAL	DEV

MPC7450 MAXBUS

NOTICE OF PROPRIETARY PROPERTY

LAST_MODIFIED=Wed May 28 20:22:59 2003
THE INFORMATION CONTAINED HEREIN IS THE PROPRIETARY PROPERTY OF APPLE COMPUTER, INC. THE POSSESSOR AGREES TO THE FOLLOWING

I TO MAINTAIN THE DOCUMENT IN CONFIDENCE

II NOT TO REPRODUCE OR COPY IT

III NOT TO REVEAL OR PUBLISH IN WHOLE OR PART

APPLE COMPUTER INC.

SIZE D | DRAWING NUMBER 051-6490 | REV. A

SCALE NONE | SHT 4 OF 74

DRAWING

CR-5

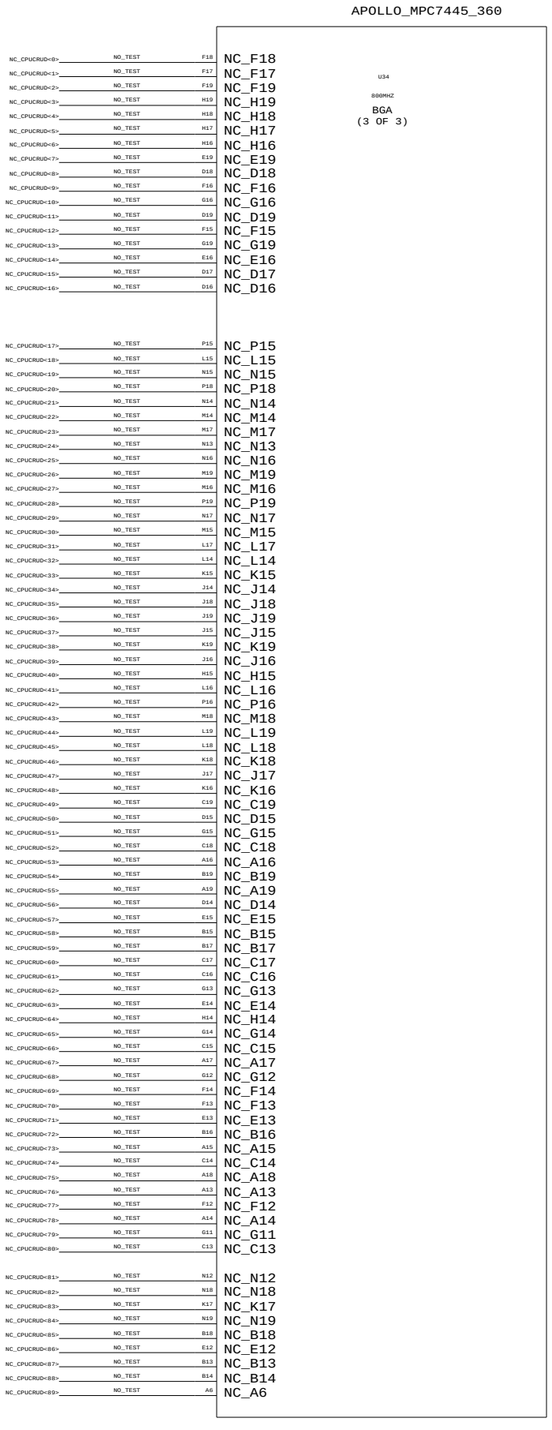

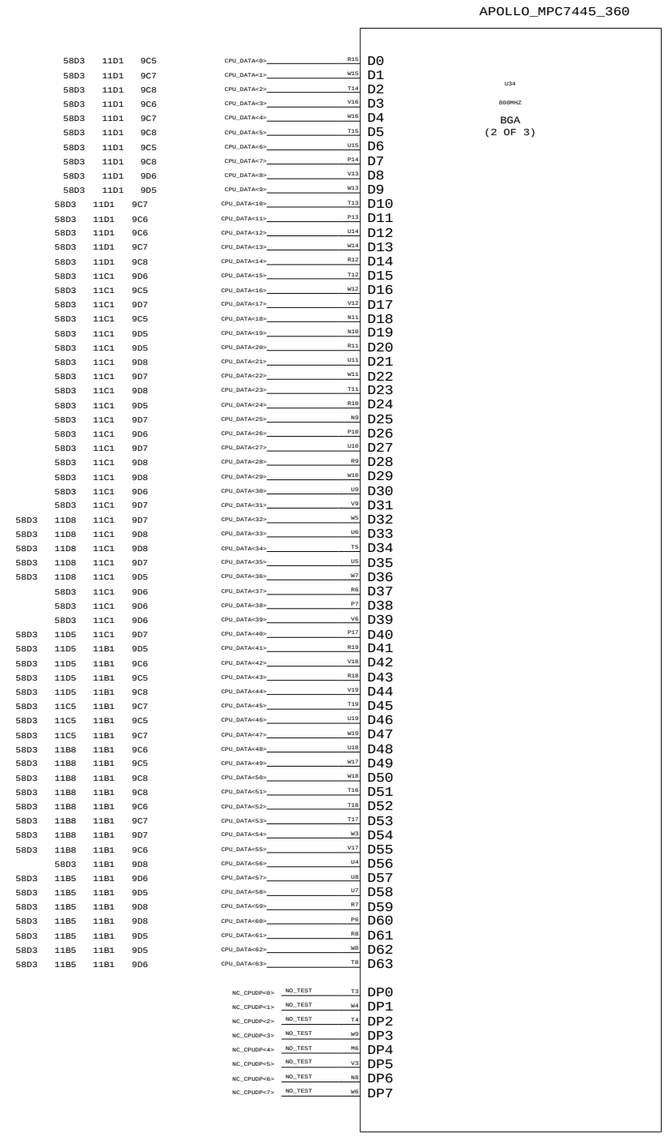

MPC7450 - 2

NOTICE OF PROPRIETARY PROPERTY

LAST MODIFIED=Wed May 28 20:23:00 2003
THE INFORMATION CONTAINED HEREIN IS THE PROPRIETARY PROPERTY OF APPLE COMPUTER, INC. THE POSSESSOR AGREES TO THE FOLLOWING

I TO MAINTAIN THE DOCUMENT IN CONFIDENCE

II NOT TO REPRODUCE OR COPY IT

III NOT TO REVEAL OR PUBLISH IN WHOLE OR PART

APPLE COMPUTER INC.

SIZE	DRAWING NUMBER	REV.
D	051-6490	A

SCALE	SHT	OF
NONE	5	74

DRAWING

BOMOPTIONS FOR UPPER-SET OF RESISTORS

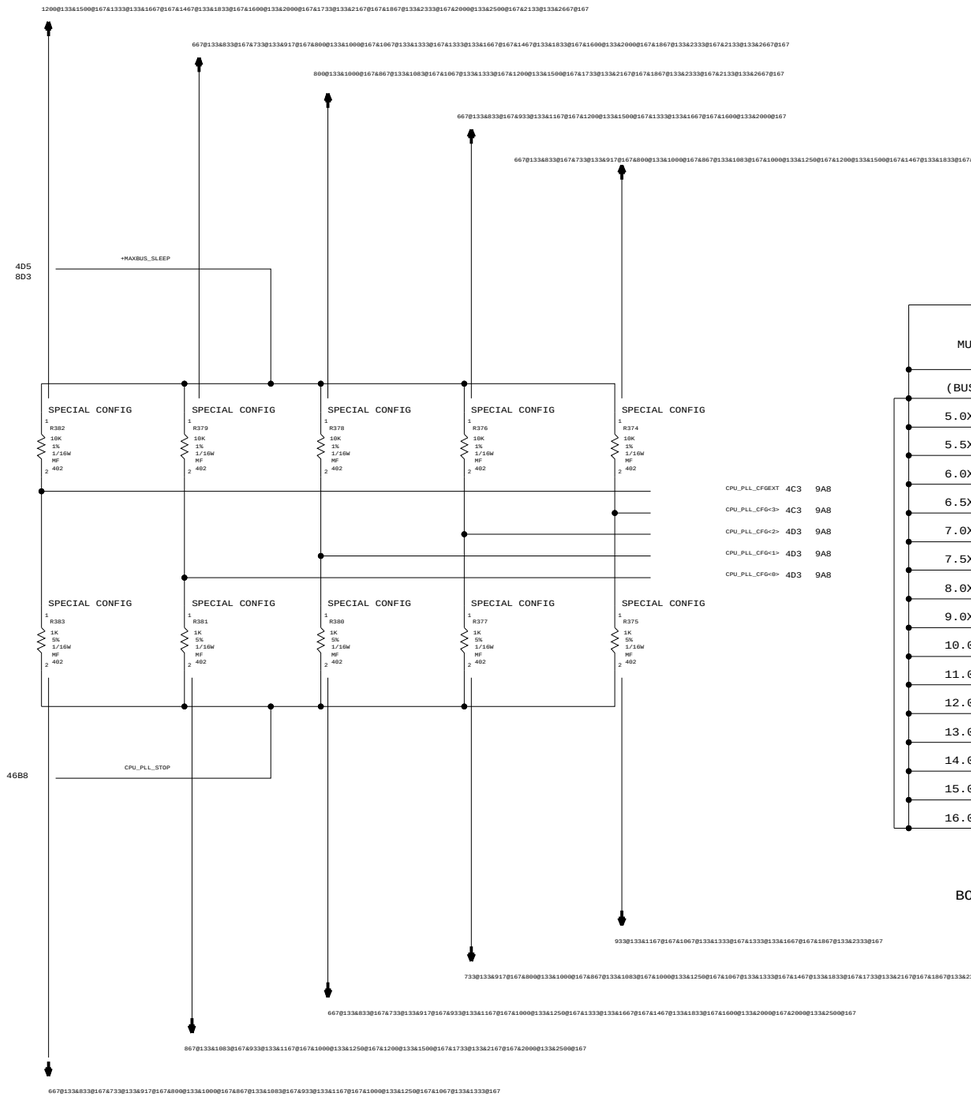

CPU FREQUENCY CONFIGURATION
(SUPPORTED CPU & BUS SPEEDS)

MULTIPLIER	CORE FREQUENCY (AT BUS FREQUENCY) 167MHZ	133MHZ	CPU_PLL_CFG
(BUS-TO-CORE)	(MHZ)		E 0123 HEX
5.0X	833	667	0 1011 0B
5.5X	917	733	0 1001 09
6.0X	1000	800	0 1101 0D
6.5X	1083	867	0 0101 05
7.0X	1167	933	0 0010 02
7.5X	1250	1000	0 0001 01
8.0X	1333	1067	0 1100 0C
9.0X	1500	1200	1 0111 17
10.0X	1667	1333	1 1010 1A
11.0X	1833	1467	1 1001 19
12.0X	2000	1600	1 1011 1B
13.0X	2167	1733	1 0101 15
14.0X	2333	1867	1 1100 1C
15.0X	2500	2000	1 0001 11
16.0X	2667	2133	1 1101 1D

CPU FREQUENCY CONFIGURATION
(OTHER POSSIBLE CPU & BUS SPEEDS)

MULTIPLIER	CORE FREQUENCY (AT BUS FREQUENCY) 167MHZ	133MHZ	CPU_PLL_CFG
(BUS-TO-CORE)	(MHZ)		E 0123 HEX
0.0X	PLL OFF		0 1111 0F
1.0X (11.5X)	167 (1917)	133 (1533)	0 0000 00
PLL BYPASS	PLL BYPASS		0 0011 03
2.0X	333	267	0 0100 04
2.5X (8.5X)	417 (1417)	333 (1133)	0 0110 06
3.0X	500	400	0 1000 08
3.5X (13.5X)	583 (2250)	467 (1800)	0 1110 0E
4.0X	667	533	0 1010 0A
4.5X (9.5X)	750 (1583)	600 (1267)	0 0111 07
17.0X	2833	2267	1 0000 10
18.0X	3000	2400	1 0010 12
20.0X	3333	2667	1 0011 13
21.0X	3500	2800	1 0100 14
24.0X	4000	3200	1 0110 16
10.5X	1750	1400	1 1000 18
28.0X	4667	3733	1 1110 1E
12.5X	2083	1667	1 1111 1F

REV 3.0+ ONLY

BOMOPTIONS FOR LOWER-SET OF RESISTORS

CPU SPEED & BUS RATIO SUPPORT

THE CONFIGURATION RESISTORS BELOW ARE SELF CONFIGURING
WHEN THE ENGINEER SELECTS THE APPROPRIATE CPU AND
BUS SPEED BOM OPTION, THE APPROPRIATE RESISTORS ARE

ARE AUTOMATICALLY SELECTED

PART NUMBER	QTY	DESCRIPTION	REFERENCE DES	CRITICAL	BOM OPTION
337S2674	1	IC,APOLLO,N5,V3.3,1.0GHZ	U34		1000@133
116S1473	2	RES,4.7K-OHM,5%,1/16W,0402	R887,R368		1000@133
114S1004	1	RES,10K-OHM,1%,1/16W,0402	R866		1000@133
337S2769	1	IC,APOLLO6,N5,V3.3,1.250GHZ	U34		1250@167
116S1473	3	RES,4.7K-OHM,5%,1/16W,0402	R887,R368,R357		1250@167

CPU BUS RATIO BITS

NOTICE OF PROPRIETARY PROPERTY
LAST MODIFIED=Wed May 28 20:23:01 2003
THE INFORMATION CONTAINED HEREIN IS THE PROPRIETARY PROPERTY OF APPLE COMPUTER, INC. THE POSSESSOR AGREES TO THE FOLLOWING
I TO MAINTAIN THE DOCUMENT IN CONFIDENCE
II NOT TO REPRODUCE OR COPY IT
III NOT TO REVEAL OR PUBLISH IN WHOLE OR PART

APPLE COMPUTER INC.
SIZE D | DRAWING NUMBER 051-6490 | REV. A
SCALE NONE | SHT 6 OF 74
DRAWING

BMODE <0>	BMODE <1>	MSSCR0 <16:17>	Sys Bus	Vger ID	Addr Drve
L	L	1 1	???	01	yes unavail
L	!hr	1 0	Max	01	yes unavail
L	hr	1 1	???	00	yes unavail
L	H	1 0	Max	00	yes unavail
!hr	L	0 1	MB+	01	yes unavail
!hr	!hr	0 0	60x	01	yes unavail
!hr	hr	0 1	MB+	00	yes unavail
!hr	H	0 0	60x	00	yes unavail
hr	L	1 1	???	01	norm unavail
hr	!hr	1 0	Max	01	norm
hr	hr	1 1	???	00	norm unavail
HR	H	1 0	MAX	00	NORM
H	L	0 1	MB+	01	norm unavail
H	!hr	0 0	60x	01	norm
H	hr	0 1	MB+	00	norm unavail
H	H	0 0	60x	00	norm

SIGNAL	TIED	APPLICATION
CPU_EMODE0_L	HIGH	60X BUS MODE
	CPU_HRESET_L	MAX BUS MODE
CPU_BUS_VSEL	CPU_HRESET_L	2.5V INTERFACE
	LOW	1.8V INTERFACE
	CPU_HRESET_H	1.5V INTERFACE
CPU_L3_VSEL	CPU_HRESET_L or L3_OVDD	2.5V INTERFACE
	LOW	1.8V INTERFACE
	CPU_HRESET_H	1.5V INTERFACE

MAXBUS PULL-UPS

9B2 8D3 7C5 7C3 61C7 54C6 48D4 7B3 7A3 6D8 4D5 47D2 46D2 46D1 46B7 11D8 11B8 9D4 9D2 +MAXBUS_SLEEP

58D3 11D3 9C7 4D7	CPU_TS_L	R347 10K 1% 1/16W MF 402	
58C3 11A1 9C5 4C3	CPU_TA_L	R348 10K 1% 1/16W MF 402	
58C3 11B3 9B8 4A7	CPU_ARTRY_L	R346 10K 1% 1/16W MF 402	
58D3 11D3 9C5 4D7	CPU_BR_L	R841 10K 1% 1/16W MF 402	
58C3 11B3 9B8 4A7	CPU_HIT_L	R840 10K 1% 1/16W MF 402	
58C3 11B1 9B6 4C2	CPU_DRDY_L	R851 10K 1% 1/16W MF 402	
58C3 11A1 9C6 4C3	CPU_TEA_L	R845 10K 1% 1/16W MF 402	
58C3 11B3 9B6 4A7	CPU_AACK_L	R849 10K 1% 1/16W MF 402	
58C3 11B1 9C8 4C3	CPU_DBG_L	R847 10K 1% 1/16W MF 402	
58D3 11D3 9B5 4D7	CPU_BG_L	R846 10K 1% 1/16W MF 402	
58D3 11B3 9B5 4B7	CPU_TBST_L	R349 10K 1% 1/16W MF 402	
58C3 11C3 4B8	CPU_INT_GBL_L	R842 10K 1% 1/16W MF 402	
58C3 11C3 9C6 4A7	CPU_CI_L	R844 10K 1% 1/16W MF 402	
58C3 11B3 9B6 4B7	CPU_WT_L	RP78 10K 5% 1/16W SM1	
58D3 11B3 9C5 4B7	CPU_TT<0>	RP78 10K 1% 1/16W SM1	
58D3 11B3 9C6 4B7	CPU_TT<1>	RP78 10K 5% 1/16W SM1	
58D3 11B3 9B5 4B7	CPU_TT<2>	R843 10K 1% 1/16W MF 402	
58D3 11B3 9B6 4B7	CPU_TT<3>	RP78 10K 5% 1/16W SM1	
58D3 11B3 9C5 4B7	CPU_TT<4>	R350 10K 1% 1/16W MF 402	

<- DEFAULT

58C3 11B3 9B7 4C3	CPU_QREQ_L	R848 10K 5% 1/16W MF 402	
61C7 9A2 8C2 4C3	JTAG_CPU_TCK	R924 10K 5% 1/16W MF 402	
61C7 9A2 8D2 4C3	JTAG_CPU_TRST_L	R925 200 5% 1/16W MF 402	
4B3	CPU_PMONIN_L	RP79 10K 5% 1/16W SM1	
4C3	CPU_EDTI	R858 10K 5% 1/16W MF 402	4D3
4D7 4A3	CPU_PULLDOWN	R859 470 5% 1/16W MF 402	

MPC7450 PULL-UPS

9B2 8D3 7C7 7C3 61C7 54C6 48D4 47D2 46D2 46D1 46B7 7B3 7A3 6D8 4D5 11D8 11B8 9D4 9D2 +MAXBUS_SLEEP

11A3 4C3	CPU_TBEN	R856 10K 5% 1/16W MF 402	4C3
4A7	CPU_SHD0_L	R857 10K 1% 1/16W MF 402	
4A7	CPU_SHD1_L	R860 10K 1% 1/16W MF 402	
4B3	CPU_MCP_L	R910 10K 1% 1/16W MF 402	
4C3	CPU_LSSD_MODE	R911 10K 1% 1/16W MF 402	
61C7 9D6 9A2 4B3	CPU_CHKSTP_OUT_L	R921 1K 5% 1/16W MF 402	
61C7 4B3	CPU_CHKSTP_IN_L	R882 1K 5% 1/16W MF 402	
4A3	CPU_PULLUP	R909 1K 5% 1/16W MF 402	4C3
61C7 46D2 46C2 9A2 8D2 7B3 7A3 4B3	CPU_HRESET_L	R922 10K 1% 1/16W MF 402	
61C4 9A2 4B3	CPU_SRESET_L	RP79 10K 5% 1/16W SM1	
30B5 9D7 4B3	MPIC_CPU_INT_L	RP79 10K 5% 1/16W SM1	4B3
46C4 4B3	CPU_SMI_L	R912 10K 1% 1/16W MF 402	
61C7 9A2 8D2 4C3	JTAG_CPU_TDI	RP79 10K 5% 1/16W SM1	4B3
61C7 9A2 8D2 4C3	JTAG_CPU_TMS	R923 10K 1% 1/16W MF 402	

NOSTUFF R915 0 5% 1/16W MF 402 — VGER_INV_HRESET — 7A3 7B3 46D1

NOSTUFF R913 10K 5% 1/16W MF 402 — +MAXBUS_SLEEP — 47D2 48D4 54C6 61C7 4D5 6D8 7A3 7B3 7C3 7C5 7C7 8D3 9B2 9D2 9D4 11B8 11D8 46B7 46D1 46D2

CPU_BUS_VSEL — R914 200 5% 1/16W MF 402

BUS MODE

0V	1.8V BUS MODE
INV_HRESET	1.5V BUS MODE
OVDD	2.5V BUS MODE

CPU_L2TSTCLK — R918 10K 5% 1/16W MF 402 — +MAXBUS_SLEEP — 47D2 48D4 54C6 61C7 4D5 6D8 7A3 7B3 7C3 7C5 7C7 8D3 9B2 9D2 9D4 11B8 11D8 46B7 46D1 46D2

NOSTUFF R926 0 5% 1/16W MF 402 — CPU_HRESET_L — 4B3 7A3 7A5 7B3 8D2 9A2 46C2 46D2 61C7

NOSTUFF R919 0 5% 1/16W MF 402 — VGER_INV_HRESET — 7A3 7B3 7C3 46D1

NOSTUFF R920 200 5% 1/16W MF 402

DO NOT USE UNLESS FIX INVERTER BUFFER

NOSTUFF R907 10K 5% 1/16W MF 402 — +MAXBUS_SLEEP — 48D4 54C6 61C7 4D5 6D8 7A3 7B3 7C3 7C5 7C7 8D3 9B2 9D2 9D4 11B8 11D8 46B7 46D1 46D2 47D2

NOSTUFF R906 0 5% 1/16W MF 402 — CPU_HRESET_L — 4B3 7A3 7A5 7B3 8D2 9A2 46C2 46D2 61C7

NOSTUFF R916 0 5% 1/16W MF 402 — VGER_INV_HRESET — 7A3 7B3 7C3 46D1

CPU_L1TSTCLK — R917 200 5% 1/16W MF 402

CPUBUS_60X R904 1K 5% 1/16W MF 402 — +MAXBUS_SLEEP — 47D2 48D4 54C6 61C7 4D5 6D8 7A3 7B3 7C3 7C5 7C7 8D3 9B2 9D2 9D4 11B8 11D8 46B7 46D1 46D2

CPU_EMODE0_L — CPUBUS_MAX — R905 200 5% 1/16W MF 402 — CPU_HRESET_L — 4B3 7A5 7B3 8D2 9A2 46C2 46D2 61C7

R903 1K 5% 1/16W MF 402 — +MAXBUS_SLEEP — 47D2 48D4 54C6 61C7 4D5 6D8 7A3 7B3 7C3 7C5 7C7 8D3 9B2 9D2 9D4 11B8 11D8 46B7 46D1 46D2

CPU_EMODE1_L — NOSTUFF R902 200 5% 1/16W MF 402 — VGER_INV_HRESET — 7B3 7C3 46D1

CPU CONFIG OPTIONS

NOTICE OF PROPRIETARY PROPERTY

LAST MODIFIED=Wed May 28 20:23:02 2003
THE INFORMATION CONTAINED HEREIN IS THE PROPRIETARY PROPERTY OF APPLE COMPUTER, INC. THE POSSESSOR AGREES TO THE FOLLOWING

I TO MAINTAIN THE DOCUMENT IN CONFIDENCE

II NOT TO REPRODUCE OR COPY IT

III NOT TO REVEAL OR PUBLISH IN WHOLE OR PART

APPLE COMPUTER INC.

SIZE	DRAWING NUMBER	REV.
D	051-6490	A
SCALE: NONE	SHT 7 OF 74	

DRAWING

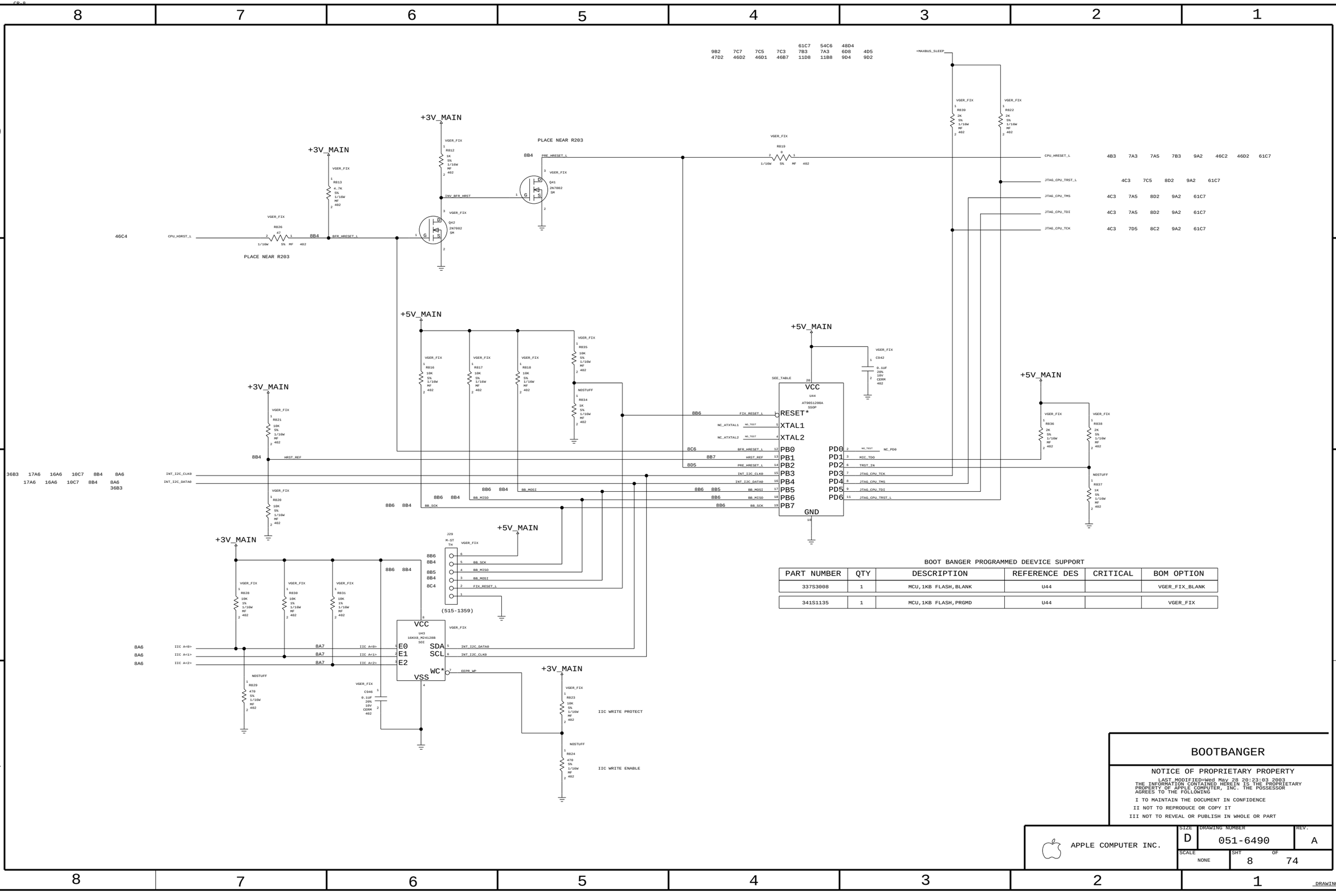

BOOT BANGER PROGRAMMED DEEVICE SUPPORT

PART NUMBER	QTY	DESCRIPTION	REFERENCE DES	CRITICAL	BOM OPTION
337S3008	1	MCU,1KB FLASH,BLANK	U44		VGER_FIX_BLANK
341S1135	1	MCU,1KB FLASH,PRGMD	U44		VGER_FIX

BOOTBANGER

NOTICE OF PROPRIETARY PROPERTY

LAST_MODIFIED=Wed May 28 20:23:03 2003
THE INFORMATION CONTAINED HEREIN IS THE PROPRIETARY PROPERTY OF APPLE COMPUTER, INC. THE POSSESSOR AGREES TO THE FOLLOWING

I TO MAINTAIN THE DOCUMENT IN CONFIDENCE

II NOT TO REPRODUCE OR COPY IT

III NOT TO REVEAL OR PUBLISH IN WHOLE OR PART

APPLE COMPUTER INC.

SIZE	DRAWING NUMBER	REV.
D	051-6490	A

SCALE	SHT	OF
NONE	8	74

DRAWING

MAXBUS LOGIC ANALYZER SUPPORT

NOTE: INTREPID MAXBUS CONFIG STRAPS MUST DROP
TO 1K OR LOGIC ANALYZER MAY AFFECT STRAP VALUES

J20 CON_38SM_MICTOR SM — CPROBE SYM_VER3 — OMIT

GND	1	38	GND
GND	2	37	GND
CLK3	3	36	Q1
C3_7	4	35	C1_7
C3_6	5	34	C1_6
C3_5	6	33	C1_5
C3_4	7	32	C1_4
C3_3	8	31	C1_3
C3_2	9	30	C1_2
C3_1	10	29	C1_1
C3_0	11	28	C1_0
C2_7	12	27	C0_7
C2_6	13	26	C0_6
C2_5	14	25	C0_5
C2_4	15	24	C0_4
C2_3	16	23	C0_3
C2_2	17	22	C0_2
C2_1	18	21	C0_1
C2_0	19	20	C0_0
GND	20		

58B3 9B3 — SYSCLK_LA — MPIC_CPU_INT_L

CPU_DATA<34> CPU_DATA<56> CPU_DATA<59> CPU_DATA<33> CPU_DATA<60> CPU_DATA<28> CPU_DATA<29> CPU_DATA<23> CPU_DATA<21> CPU_DATA<14> CPU_DATA<58> CPU_DATA<2> CPU_DATA<5> CPU_DATA<51> CPU_DATA<7> CPU_DATA<44>

CPU_DATA<35> CPU_DATA<54> CPU_DATA<32> CPU_DATA<40> CPU_DATA<31> CPU_DATA<25> CPU_DATA<27> CPU_DATA<22> CPU_DATA<17> CPU_DATA<10> CPU_DATA<13> CPU_DATA<1> CPU_DATA<4> CPU_DATA<53> CPU_DATA<47> CPU_DATA<45>

58D3 11D1 5D4 11D1 5D4 58D3 11D1 5D4 58D3

J31 CON_38SM_MICTOR SM — APROBE SYM_VER3 — OMIT

GND	1	38	GND
GND	2	37	GND
CLK0	3	36	CLK1
A3_7	4	35	A1_7
A3_6	5	34	A1_6
A3_5	6	33	A1_5
A3_4	7	32	A1_4
A3_3	8	31	A1_3
A3_2	9	30	A1_2
A3_1	10	29	A1_1
A3_0	11	28	A1_0
A2_7	12	27	A0_7
A2_6	13	26	A0_6
A2_5	14	25	A0_5
A2_4	15	24	A0_4
A2_3	16	23	A0_3
A2_2	17	22	A0_2
A2_1	18	21	A0_1
A2_0	19	20	A0_0
GND	20		

CPU_ADDR<26> CPU_ADDR<29> CPU_ADDR<27> CPU_ADDR<18> CPU_ADDR<23> CPU_ADDR<25> CPU_DBG_L CPU_ADDR<17> CPU_ADDR<20> CPU_ADDR<16> CPU_ARTRY_L CPU_ADDR<10> CPU_ADDR<13> CPU_HIT_L CPU_ADDR<3> CPU_ADDR<9>

CPU_ADDR<30> CPU_ADDR<31> CPU_ADDR<28> CPU_ADDR<22> CPU_ADDR<21> CPU_ADDR<24> CPU_TS_L CPU_ADDR<15> CPU_ADDR<19> CPU_ADDR<14> CPU_DTI<0> CPU_ADDR<7> CPU_ADDR<12> CPU_QREQ_L CPU_TSIZ<2> CPU_ADDR<5>

58C3 7B7 4C3 11B1 — 58C3 7C7 4A7 11B3 — 4C7 11C3 58D3 — 4C7 11D3 58D3 — 4C7 11C3 58D3

J30 CON_38SM_MICTOR SM — EPROBE SYM_VER5 — OMIT

GND	1	38	GND
GND	2	37	GND
Q3	3	36	Q2
E3_7	4	35	E1_7
E3_6	5	34	E1_6
E3_5	6	33	E1_5
E3_4	7	32	E1_4
E3_3	8	31	E1_3
E3_2	9	30	E1_2
E3_1	10	29	E1_1
E3_0	11	28	E1_0
E2_7	12	27	E0_7
E2_6	13	26	E0_6
E2_5	14	25	E0_5
E2_4	15	24	E0_4
E2_3	16	23	E0_3
E2_2	17	22	E0_2
E2_1	18	21	E0_1
E2_0	19	20	E0_0
GND	20		

CPU_CHKSTP_OUT_L — CPU_DATA<37> CPU_DATA<39> CPU_DATA<38> CPU_DATA<63> CPU_DATA<57> CPU_DATA<30> CPU_DATA<26> CPU_DATA<8> CPU_DATA<15> CPU_DATA<55> CPU_DATA<11> CPU_DATA<3> CPU_DATA<12> CPU_DATA<52> CPU_DATA<42> CPU_DATA<48>

CPU_DATA<58> CPU_DATA<36> CPU_DATA<62> CPU_DATA<61> CPU_DATA<24> CPU_DATA<41> CPU_DATA<9> CPU_DATA<19> CPU_DATA<20> CPU_DATA<16> CPU_DATA<18> CPU_DATA<49> CPU_DATA<6> CPU_DATA<0> CPU_DATA<43> CPU_DATA<46>

61C7 9A2 7B5 — 4B3 7A5 30B5 4B3 — 5C4 11C1 58D3 11C1 5B4 11D8 58D3 — 5C4 11C1 58D3 11C1 5B4 11D8 58D3 — 5C4 11C1 58D3 — 5C4 11C1 58D3 11C1 5C4 — 5C4 11C1 58D3 11C1 5C4 58D3 — 5C4 11C1 58D3 — 5C4 11C1 58D3 11C1 5C4 58D3 — 5D4 11D1 58D3 — 5C4 11C1 58D3 11D1 5C4 58D3 — 5D4 11D1 58D3 — 5D4 11D1 58D3 — 5B4 11B1 11B8 58D3 — 5B4 11B1 11C5 58D3 — 5B4 11B1 11C5 58D3 11B8 5B4 11B1

J19 CON_37SM_MICTOR F-ST-SM — DPROBE SYM_VER1 — OMIT

GND	1	38	GND
Q0	2	37	CLK2
D3_7	3	36	D1_7
D3_6	4	35	D1_6
D3_5	5	34	D1_5
D3_4	6	33	D1_4
D3_3	7	32	D1_3
D3_2	8	31	D1_2
D3_1	9	30	D1_1
D3_0	10	29	D1_0
D2_7	11	28	D0_7
D2_6	12	27	D0_6
D2_5	13	26	D0_5
D2_4	14	25	D0_4
D2_3	15	24	D0_3
D2_2	16	23	D0_2
D2_1	17	22	D0_1
D2_0	18	21	D0_0
GND	19	20	

CPU_ADDR<8> CPU_CI_L CPU_TSIZ<1> CPU_ADDR<4> CPU_TEA_L CPU_TT<1> CPU_ADDR<1> CPU_TSIZ<0> CPU_WT_L CPU_TT<3> CPU_DRDY_L CPU_GBL_L CPU_AACK_L

CPU_ADDR<11> CPU_ADDR<6> CPU_TA_L CPU_TT<0> CPU_ADDR<2> CPU_BR_L CPU_TT<4> CPU_ADDR<0> CPU_TBST_L CPU_DTI<1> CPU_TT<2> CPU_BG_L CPU_QACK_L CPU_DTI<2>

4B7 11C3 58D3 — 4B7 11C3 58D3 — 4B7 11C3 58D3 — 4C7 11C3 58D3 — 4B7 11C3 58D3 — 4B7 11C3 58D3 — 4C7 11C3 58D3 — 4C7 11C3 58D3 — 4C3 11A1 58C3 7A7 11B3 58C3 — 4C7 11C3 58D3 — 4C3 7D5 11B3 58C3 — 4B7 11B3 58D3 — 4C7 11D3 58D3

11C3 4C7 58D3 — 11B3 4B7 58D3 4C7 — 58D3 11D3 — 11D3 4C7 58D3 4B7 — 58D3 11B3 — 58C3 11B1 7B7 4C2 — 58C3 4B8 — 7B7 4A7 58C3 11B3

4C7 11B3 58D3 — 4C3 11A1 58C3 — 4D7 7B7 11D3 58D3 — 4B7 7A7 11B3 58D3 — 4C7 11D3 58D3 — 4B7 7B7 11B3 58D3 — 4C3 11A1 58C3 — 4B7 7A7 11B3 58D3 — 4D7 7B7 11D3 58D3 — 4C3 11B3 58C3 — 4C3 11A1 58C3

56A7 18C7 11B4 61A7 58B3

(519-0698)

INTREPID CLOCK OUTPUT

NOSTUFF J27 U.FL-R_SMT F-ST-SM — 61D7 61B4 9B6 4D7 4D3 54C6 47C1 47B3

58B3 — NOSTUFF R314 0 5% 1/16W MF 402 — INT_CLOCK_OUT — NOSTUFF R308 47 5% 1/16W MF 402 — (518S0104)

PLACE BOTH RESISTORS CLOSE TO INTREPID

NOSTUFF R313 22 5% 1/16W MF 402 — INT_ANALYZER_CLK — SYSCLK_LA — 9D8 58B3

CPU CORE DECOUPLING

CPU_VCORE_SLEEP

C1022 C1027 C1011 C1008 C1010 C1025
C1009 C1002 C1023 C1017 C1031 C997
C996 C1012 C1024 C1001 C1028 C1018
1UF 10% 6.3V CERM 402

C1901 C1902 C1903 C1904 C1910 — 0.1UF 20% 10V CERM 402

61D7 37B4 37A2 36B7 — 61D7 36B7 30C6 — 61D7 37B4 — 61D7 37C4 36B7 — 61C7 36B7

(518S0105)

FMAX DEBUG CONNECTOR

NOSTUFF J32 SM12B-SRSS-TB F-RT-SM — 61B4 54C6 47C1 47B3 9C2 4D7 4D3 61D7

CPU_PLL_CFG<0>	1	4D3	6C6
CPU_PLL_CFG<1>	2	4D3	6C6
CPU_PLL_CFG<2>	3	4D3	6C6
CPU_PLL_CFG<3>	4	4C3	6C6
CPU_PLL_CFGEXT	5	4C3	6C6
	6		
NC_FMAX7 (NO_TEST)	7		
NC_FMAX8 (NO_TEST)	8		
PWR_SWITCH*	9	46B1	46C5 61D4
PMU_RST*	10	31B3	46A5 46B5 61D4
NC_RESET_BUTTON_L (NO_TEST)	11		
	12		
	13		
	14		

(518S0105)

+MAXBUS_SLEEP

C350 C958 C983 C992 — 10UF 20% 6.3V CERM 805
C969 C353 — 2.2UF 20% 10V CERM 805
C988 C1026 C1043 C982 C1013 C999 C974 C1003
C1041 C1014 C997 C998 C995 C991 C977 — 0.1UF 20% 10V CERM 402

5B4 11B1 11B5 58D3 — 5C4 11C1 11D8 58D3 — 5B4 11B1 11B5 58D3 — 5B4 11B1 11B5 58D3 — 5C4 11C1 58D3 — 5B4 11B1 11D5 58D3 — 5D4 11D1 58D3 — 5C4 11C1 58D3 — 5C4 11C1 58D3 — 5C4 11C1 58D3 — 5B4 11B1 11B8 58D3 — 5D4 11D1 58D3 — 5D4 11D1 58D3 — 5B4 11B1 11D5 58D3 — 5B4 11B1 11C5 58D3

61C7 54C6 48D4 — 8D3 7C7 7C5 7C3 7B3 7A3 6D8 4D5 — 47D2 46D2 46D1 46B7 11D8 11B8 9D4 9B2

+MAXBUS_SLEEP

C972 C981 C980 C973 C993 C990
C994 C1007 C961 C1020 C1021 C967 — 0.1UF 20% 10V CERM 402

CPU_VCORE_SLEEP

C1040 C976 C1037 C1033 — 10UF 20% 6.3V CERM 1206
C1032 C1042 C1016 C364 — 2.2UF 20% 10V CERM 805
C1911 C1912 C1913 C1914 — 10UF 20% 6.3V CERM 1206
C598 C1054 C1055 C1056 C1057 C1058 — 22UF 20% 10V CERM 1210

PULLDOWN ON TRST* STRONGER TO OVERCOME POSSIBLE LEAKAGE

+3V_MAIN

R937 10K 5% 1/16W MF 402 — R938 10K 5% 1/16W MF 402 — R939 10K 5% 1/16W MF 402 — R940 1K 5% 1/16W MF 402

NOSTUFF J22 SM-1 — +MAXBUS_SLEEP

NC_TESTMODE		NO_TEST	3
NC_LCENABLE		NO_TEST	5
NC_JTAG7		NO_TEST	7
JTAG_ASIC_TMS	9	NO_TEST	NC_JTAG10
JTAG_ASIC_TDI	11		
JTAG_ASIC_TDO	13		
JTAG_ASIC_TCK	15		
JTAG_ASIC_TRST_L	17		
	19		

CPU_CHKSTP_OUT_L	4	4B3	7B5 9D6 61C7
CPU_HRESET_L	6	4B3	7A3 7A5 7B3 8D2 46C2 46D2 61C7
CPU_SRESET_L	8	4B3	7A5 61C4
JTAG_CPU_TMS	12	4C3	7A5 8D2 61C7
JTAG_CPU_TDI	14	4C3	7A5 8D2 61C7
JTAG_CPU_TDO	16	4C3	61C7
JTAG_CPU_TCK	18	4C3	7D5 8C2 61C7
JTAG_CPU_TRST_L	20	4C3	7C5 8D2 61C7

4BD4 54C6 61C7 — 4D5 6D8 7A3 7B3 7C3 7C5 7C7 8D3 — 9D2 9D4 11B8 11D8 46B7 46D1 46D2 47D2

(511S0018)

LA CONS & ESP

NOTICE OF PROPRIETARY PROPERTY
LAST MODIFIED=Wed May 28 20:23:05 2003
THE INFORMATION CONTAINED HEREIN IS THE PROPRIETARY PROPERTY OF APPLE COMPUTER, INC. THE POSSESSOR AGREES TO THE FOLLOWING
I TO MAINTAIN THE DOCUMENT IN CONFIDENCE
II NOT TO REPRODUCE OR COPY IT
III NOT TO REVEAL OR PUBLISH IN WHOLE OR PART

APPLE COMPUTER INC.

SIZE	DRAWING NUMBER	REV.
D	051-6490	A
SCALE: NONE	SHT 9 OF 74	

DRAWING

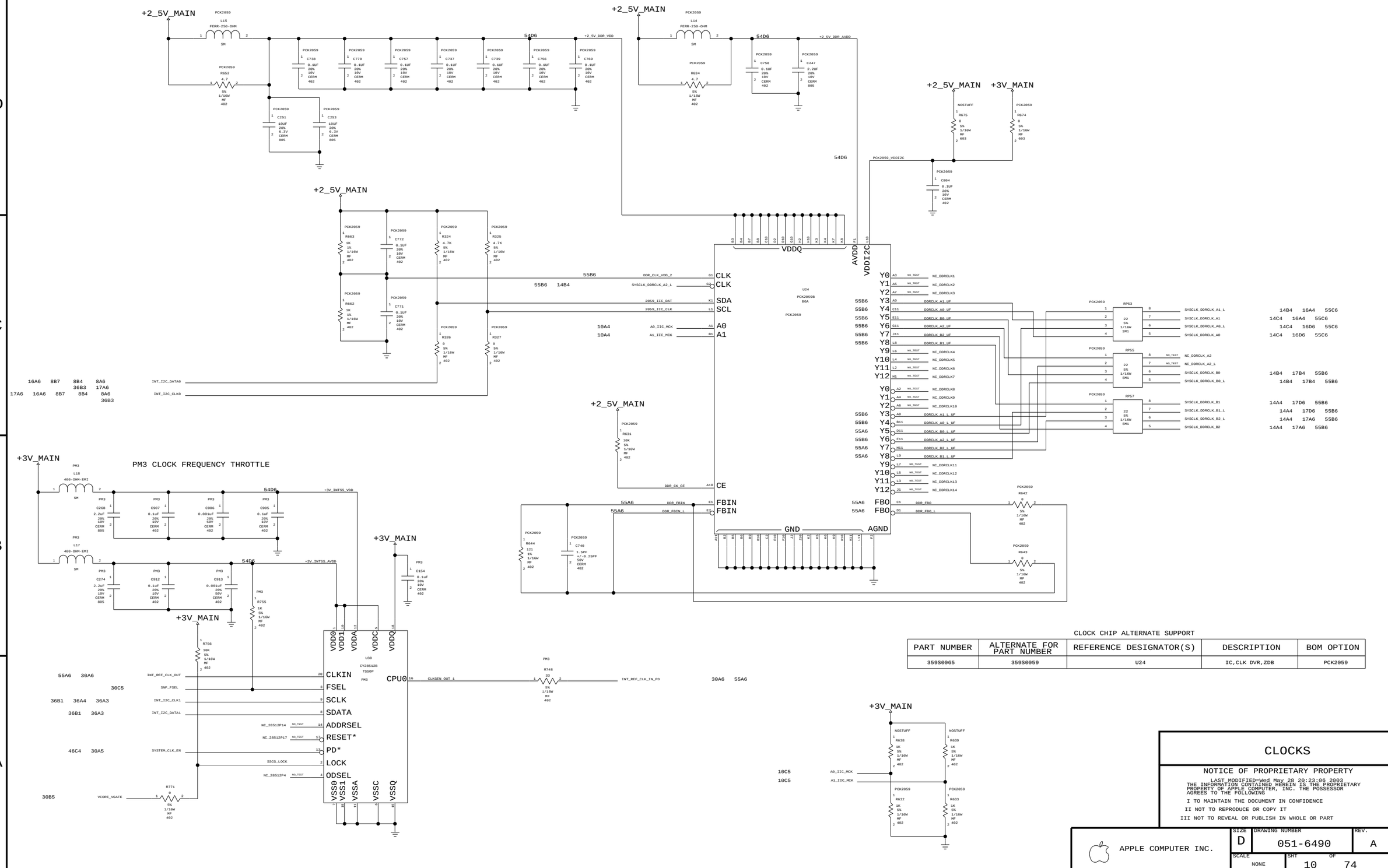

CLOCK CHIP ALTERNATE SUPPORT

PART NUMBER	ALTERNATE FOR PART NUMBER	REFERENCE DESIGNATOR(S)	DESCRIPTION	BOM OPTION
359S0065	359S0059	U24	IC,CLK DVR,ZDB	PCK2059

CLOCKS

NOTICE OF PROPRIETARY PROPERTY

LAST MODIFIED=Wed May 28 20:23:06 2003

THE INFORMATION CONTAINED HEREIN IS THE PROPRIETARY PROPERTY OF APPLE COMPUTER, INC. THE POSSESSOR AGREES TO THE FOLLOWING

I TO MAINTAIN THE DOCUMENT IN CONFIDENCE

II NOT TO REPRODUCE OR COPY IT

III NOT TO REVEAL OR PUBLISH IN WHOLE OR PART

APPLE COMPUTER INC.

SIZE	DRAWING NUMBER	REV.
D	051-6490	A
SCALE NONE	SHT 10 OF 74	

DRAWING

INTREPID BOOT STRAPS

BITS 32 - 47

+MAXBUS_SLEEP

NOSTUFF R833 10K 5% 1/16W MF 402 — CPU_DATA<32>
NOSTUFF R852 10K 5% 1/16W MF 402 — CPU_DATA<33>
NOSTUFF R862 10K 5% 1/16W MF 402 — CPU_DATA<34>
NOSTUFF R878 10K 5% 1/16W MF 402 — CPU_DATA<35>
OMIT R866 10K 5% 1/16W MF 402 — CPU_DATA<36>
NOSTUFF R877 10K 5% 1/16W MF 402 — CPU_DATA<40>
NOSTUFF R867 10K 5% 1/16W MF 402 — CPU_DATA<41>

INT_V1
NOSTUFF R854 10K 5% 1/16W MF 402 — CPU_DATA<42>
NOSTUFF R853 10K 5% 1/16W MF 402 — CPU_DATA<43>
NOSTUFF R879 10K 5% 1/16W MF 402 — CPU_DATA<44>
OMIT R889 10K 5% 1/16W MF 402 — CPU_DATA<45>
OMIT R874 10K 5% 1/16W MF 402 — CPU_DATA<46>
NOSTUFF R875 10K 5% 1/16W MF 402 — CPU_DATA<47>

R342 4.7K 5% 1/16W MF 402 — INT_V2
R345 4.7K 5% 1/16W MF 402 — R353 4.7K 5% 1/16W MF 402
R861 4.7K 5% 1/16W MF 402 — R344 4.7K 5% 1/16W MF 402
R364 4.7K 5% 1/16W MF 402 — R363 4.7K 5% 1/16W MF 402
OMIT R357 4.7K 5% 1/16W MF 402 — OMIT R887 4.7K 5% 1/16W MF 402
R365 4.7K 5% 1/16W MF 402 — OMIT R368 4.7K 5% 1/16W MF 402
R356 4.7K 5% 1/16W MF 402 — R367 4.7K 5% 1/16W MF 402

11C1	9D7	5C4	58D3
11C1	9D8	5C4	58D3
11C1	9D5	5C4	58D3

5B4	9D7	11C1	58D3
5B4	9D5	11B1	58D3
5B4	9C6	11B1	58D3
5B4	9C5	11B1	58D3
5B4	9C8	11B1	58D3
5B4	9C7	11B1	58D3
5B4	9C5	11B1	58D3
5B4	9C7	11B1	58D3

PLL4MODESEL_NXT[2:0]
000: 166.4 MHZ
001: 149.76 MHZ
010: 133.12 MHZ
011: 99.84 MHZ
100: 83.20 MHZ

- DDR_TPDMODEENABLE_H — 0: INACTIVE 1: ACTIVE / 1: TDI OUTPUT (3TAO)
- ANALYZERCLK_EN_H — 0: INACTIVE 1: ACTIVE
- DDR_TPDSEN_POL — 0: ACTIVE HIGH 1: ACTIVE LOW
- EXTPLL_SDWN_POL — 0: ACTIVE HIGH 1: ACTIVE LOW
- SPARE
- SPARE
- SPARE
- INTERNAL-SPREADEN — 0: INACTIVE 1: ACTIVE
- PCI1 SOURCE CLOCK — 0: PLL4 1: PLL5 (NO SPREAD)
- PCI0 SOURCE CLOCK — 0: PLL4 1: PLL5 (NO SPREAD)

INTREPID BOOT STRAPS

BITS 48 - 63

+MAXBUS_SLEEP

NOSTUFF R890 10K 5% 1/16W MF 402 — CPU_DATA<48>
NOSTUFF R868 10K 5% 1/16W MF 402 — CPU_DATA<49>
NOSTUFF R802 10K 5% 1/16W MF 402 — CPU_DATA<50>
NOSTUFF R832 10K 5% 1/16W MF 402 — CPU_DATA<51>
NOSTUFF R863 10K 5% 1/16W MF 402 — CPU_DATA<52>
NOSTUFF R839 10K 5% 1/16W MF 402 — CPU_DATA<53>
NOSTUFF R340 10K 5% 1/16W MF 402 — CPU_DATA<54>

NOSTUFF R864 10K 5% 1/16W MF 402 — CPU_DATA<55>
NOSTUFF R876 10K 5% 1/16W MF 402 — CPU_DATA<56>
NOSTUFF R865 10K 5% 1/16W MF 402 — CPU_DATA<57>
NOSTUFF R885 10K 5% 1/16W MF 402 — CPU_DATA<58>
NOSTUFF R855 10K 5% 1/16W MF 402 — CPU_DATA<59>
NOSTUFF R869 10K 5% 1/16W MF 402 — CPU_DATA<60>

R894 4.7K 5% 1/16W MF 402 — R359 4.7K 5% 1/16W MF 402
NOSTUFF R355 4.7K 5% 1/16W MF 402 — R366 4.7K 5% 1/16W MF 402
R893 4.7K 5% 1/16W MF 402 — R358 4.7K 5% 1/16W MF 402
NOSTUFF R343 4.7K 5% 1/16W MF 402 — R886 4.7K 5% 1/16W MF 402
R360 4.7K 5% 1/16W MF 402 — NOSTUFF R354 4.7K 5% 1/16W MF 402
R352 4.7K 5% 1/16W MF 402 — R351 4.7K 5% 1/16W MF 402
R338 4.7K 5% 1/16W MF 402 — R870 4.7K 5% 1/16W MF 402
R341 4.7K 5% 1/16W MF 402 — CPU_DATA<63>

11B1	9C6	5B4	
11B1	9C5	5B4	58D3
11B1	9C8	5B4	58D3
11B1	9C7	5B4	58D3
5B4	58D3	11B1	9D7

5B4	9D6	11B1	58D3
5B4	9D5	11B1	58D3
5B4	9D8	11B1	58D3
5B4	9D8	11B1	58D3
5B4	9D5	11B1	58D3
5B4	9D5	11B1	58D3
5A4	9D6	11B1	58D3

58B3 56A7 18C7 9B4 61A7

- BUF_REF_CLK_OUTENABLE_H — 0: INACTIVE 1: ACTIVE
- SELPLL4EXTSRC — 0: PLL5 1: EXTERNAL SOURCE
- EN_PCI_ROM_P — 0: BOOTROM ON IDE/CARDSLOT 1: BOOTROM ON PCI1
- TI 1394B WORKAROUND — 0: NORMAL 1394B 1: TI PHY WORKAROUND

MAXBUS OUTPUT IMPEDANCE
111: 28.6 OHM
011: 33.3 OHM
101: 40 OHM
001: 50 OHM
110: 66.6 OHM
010: 100 OHM
100: 200 OHM
000: 200 OHM

- SPARE
- SPARE
- BOOTROM Ovrly Rng — 0: 0 IDE / 1 PCI1 1: 0-1 IDE / 2-3 PCI1
- PCI1_REQ2_L / PCI1_GNT2_L — 0: REQ/GNT 1: GPIOs
- PCI1_REQ1_L / PCI1_GNT1_L — 0: REQ/GNT 1: GPIOs
- PCI1_REQ0_L / PCI1_GNT0_L — 0: REQ/GNT 1: GPIOs
- FIREWIRE PHY INTERFACE — 0: LEGACY INTERFACE 1: B-MODE INTERFACE
- PROCESSOR BUS MODE — 0: MAX BUS (G4) 1: 60X BUS (G3)

54D3 32D5 30D6 18D6

+1_5V_INTREPID_PLL — R720 4.7 5% 1/16W MF 402 — 54D3 — +1_5V_INTREPID_PLL7
C854 0.22uF 20% 6.3V CERM 402
C1101 0.22uF 20% 6.3V CERM 402
11A2 INT_PLL6_GND

VDD15A_7 (PLL6)

U25 INTREPID BGA SEE TABLE (ON PAGE 12)

(1 OF 9)

58D3	9C5	7C7	4D7	CPU_BR_L	E29 BR
58D3	9B5	7B7	4D7	CPU_BG_L	E26 BG
58D3	9C7	7C7	4D7	CPU_TS_L	B27 TS
58D3	9C5	4C7		CPU_ADDR<0>	D24 A_0
58D3	9C6	4C7		CPU_ADDR<1>	D25 A_1
58D3	9C5	4C7		CPU_ADDR<2>	A27 A_2
58D3	9B8	4C7		CPU_ADDR<3>	E24 A_3
58D3	9C6	4C7		CPU_ADDR<4>	G23 A_4
58D3	9B7	4C7		CPU_ADDR<5>	B26 A_5
58D3	9C5	4C7		CPU_ADDR<6>	A26 A_6
58D3	9B7	4C7		CPU_ADDR<7>	D23 A_7
58D3	9C6	4C7		CPU_ADDR<8>	A25 A_8
58D3	9B8	4C7		CPU_ADDR<9>	E23 A_9
58D3	9B8	4C7		CPU_ADDR<10>	J22 A_10
58D3	9C5	4C7		CPU_ADDR<11>	B25 A_11
58D3	9B7	4C7		CPU_ADDR<12>	H22 A_12
58D3	9B8	4C7		CPU_ADDR<13>	G22 A_13
58D3	9B7	4C7		CPU_ADDR<14>	D22 A_14
58D3	9C7	4C7		CPU_ADDR<15>	B24 A_15
58D3	9B8	4C7		CPU_ADDR<16>	B23 A_16
58D3	9C8	4C7		CPU_ADDR<17>	E22 A_17
58D3	9C8	4C7		CPU_ADDR<18>	J21 A_18
58D3	9B7	4C7		CPU_ADDR<19>	G21 A_19
58D3	9B8	4C7		CPU_ADDR<20>	E21 A_20
58D3	9C7	4C7		CPU_ADDR<21>	A24 A_21
58D3	9C7	4C7		CPU_ADDR<22>	D21 A_22
58D3	9C8	4C7		CPU_ADDR<23>	A23 A_23
58D3	9C7	4B7		CPU_ADDR<24>	H26 A_24
58D3	9C8	4B7		CPU_ADDR<25>	B22 A_25
58D3	9C8	4B7		CPU_ADDR<26>	H21 A_26
58D3	9C8	4B7		CPU_ADDR<27>	A22 A_27
58D3	9C7	4B7		CPU_ADDR<28>	E20 A_28
58D3	9C8	4B7		CPU_ADDR<29>	B21 A_29
58D3	9C7	4B7		CPU_ADDR<30>	D20 A_30
58D3	9C7	4B7		CPU_ADDR<31>	A21 A_31
58C3	9C6	7A7	4A7	CPU_CI_L	G26 CI
58C3	7B7	4B8		CPU_INT_GBL_L	A25 GBL
58D3	9B5	7B7	4B7	CPU_TBST_L	A28 TBST
58D3	9B6	4B7		CPU_TSIZ<0>	G24 TSIZ_0
58D3	9C6	4B7		CPU_TSIZ<1>	H24 TSIZ_1
58D3	9B7	4B7		CPU_TSIZ<2>	D26 TSIZ_2
58D3	9C5	7A7	4B7	CPU_TT<0>	E25 TT_0
58D3	9C6	7A7	4B7	CPU_TT<1>	G25 TT_1
58D3	9B5	7A7	4B7	CPU_TT<2>	B28 TT_2
58D3	9B6	7A7	4B7	CPU_TT<3>	D27 TT_3
58D3	9C5	7A7	4B7	CPU_TT<4>	J25 TT_4
58C3	9B6	7A7	4B7	CPU_WT_L	D28 WT
58C3	9B6	7B7	4A7	CPU_AACK_L	B29 AACK
58C3	9B8	7C7	4A7	CPU_ARTRY_L	H23 ARTRY
58C3	9B8	7C7	4A7	CPU_HIT_L	B31 HIT
58C3	9B7	7D5	4C3	CPU_QREQ_L	A32 QREQ
58C3	9B5	4C3		CPU_QACK_L	G27 QACK
46B8	46B5			INT_SUSPEND_REQ_L	AK5 SUSPENDREQ
46B5				INT_SUSPEND_ACK_L	AM8 SUSPENDACK

MAXBUS INTERFACE

58C3				INT_CPU_FB_IN	J24 CPU_FB_IN
				INT_CPU_FB_OUT	H16 CPU_FB_OUT
				INT_ANALYZER_CLKA	G8 ANALYZER_CLK
46C4				CPU_CLK_EN	AH5 STOPCPUCLK
				INTREPID_ACS_REF	H13 ACS_REF
				SYSCLK_CPU_UF	J15 CPU_CLK
7C5	4C3			CPU_TBEN	A31 TBEN

INTREPID V1.1 IS 133MHZ ONLY

				D_0	D10 CPU_DATA<0>
				D_1	G12 CPU_DATA<1>
				D_2	E11 CPU_DATA<2>
				D_3	H11 CPU_DATA<3>
				D_4	B9 CPU_DATA<4>
				D_5	B8 CPU_DATA<5>
				D_6	A9 CPU_DATA<6>
				D_7	A8 CPU_DATA<7>
				D_8	E12 CPU_DATA<8>
				D_9	D11 CPU_DATA<9>
				D_10	B10 CPU_DATA<10>
				D_11	J13 CPU_DATA<11>
				D_12	A10 CPU_DATA<12>
				D_13	D12 CPU_DATA<13>
				D_14	E13 CPU_DATA<14>
				D_15	G13 CPU_DATA<15>
				D_16	B11 CPU_DATA<16>
				D_17	D13 CPU_DATA<17>
				D_18	A11 CPU_DATA<18>
				D_19	G14 CPU_DATA<19>
				D_20	H14 CPU_DATA<20>
				D_21	E14 CPU_DATA<21>
				D_22	B12 CPU_DATA<22>
				D_23	G15 CPU_DATA<23>
				D_24	B13 CPU_DATA<24>
				D_25	H15 CPU_DATA<25>
				D_26	D14 CPU_DATA<26>
				D_27	B14 CPU_DATA<27>
				D_28	A12 CPU_DATA<28>
				D_29	G16 CPU_DATA<29>
				D_30	E15 CPU_DATA<30>
				D_31	J16 CPU_DATA<31>
				D_32	D15 CPU_DATA<32>
				D_33	A14 CPU_DATA<33>
				D_34	A13 CPU_DATA<34>
				D_35	D16 CPU_DATA<35>
				D_36	E16 CPU_DATA<36>
				D_37	G17 CPU_DATA<37>
				D_38	B15 CPU_DATA<38>
				D_39	H17 CPU_DATA<39>
				D_40	A15 CPU_DATA<40>
				D_41	B16 CPU_DATA<41>
				D_42	E17 CPU_DATA<42>
				D_43	A16 CPU_DATA<43>
				D_44	J18 CPU_DATA<44>
				D_45	H18 CPU_DATA<45>
				D_46	D17 CPU_DATA<46>
				D_47	G18 CPU_DATA<47>
				D_48	A17 CPU_DATA<48>
				D_49	B17 CPU_DATA<49>
				D_50	E18 CPU_DATA<50>
				D_51	B18 CPU_DATA<51>
				D_52	D18 CPU_DATA<52>
				D_53	A18 CPU_DATA<53>
				D_54	A19 CPU_DATA<54>
				D_55	H19 CPU_DATA<55>
				D_56	B19 CPU_DATA<56>
				D_57	J19 CPU_DATA<57>
				D_58	A20 CPU_DATA<58>
				D_59	B19 CPU_DATA<59>
				D_60	E19 CPU_DATA<60>
				D_61	G19 CPU_DATA<61>
				D_62	B20 CPU_DATA<62>
				D_63	G20 CPU_DATA<63>
				DBG	A30 CPU_DBG_L
				DRDY	D28 CPU_DRDY_L
				DTI_0	K25 CPU_DTI<0>
				DTI_1	D29 CPU_DTI<1>
				DTI_2	B30 CPU_DTI<2>
				TA	E27 CPU_TA_L
				TEA	E28 CPU_TEA_L

5D4	9C5	58D3	
5D4	9C8	58D3	
58D3	9C8		
58D3	5D4		
5D4	9C5		
5D4	9C8	58D3	
58D3	5C4	9D6	
58D3	5C4	9D7	
58D3	5C4	9D5	
5C4	9D5	58D3	
58D3	5C4	9D8	
58D3	5C4	9D7	
58D3	5C4	9D7	
58D3	5C4	9D8	
58D3	5C4	9D6	
58D3	5C4	9D8	
58D3	5C4	9C5	
11D8	58D3		
11D8	58D3		
5C4	9D5		
58D3	5B4	9D6	
5B4	9D6	58D3	
9C8	58C3		
4C3	7B7		
9B6	58C3		
4C2	7B7	58C3	
9B7	4C3		
58C3	9B5		
4C3	58C3		
4C3	7C7		
4C3	9C5		
7B7	58C3		
9C6	58C3		

VIN = INTREPID VCORE (1.7V)
VOUT = MAXBUS RAIL (1.8V)

11D3 INT_PLL6_GND

VSSA_7 (PLL6)

U26 NO_TEST — XW47 SM

58C3 4D2 58B3

ADDS 2" (0.35 NS) — ADDS 1" (0.17 NS) — ADDS 3" (0.5 NS)

CPU_FB1_PLUS1 — R321 0 5% 1/16W MF 402 — R777 0 5% 1/16W MF 402 — R310 0 5% 1/16W MF 402 — R772 0 5% 1/16W MF 402 — R766 0 5% 1/16W MF 402
CPU_FB_PLUS3 — CPU_FB_MINUS3 — R752 470 5% 1/16W MF 402
CPU_FB_PLUS2 — R776 0 5% 1/16W MF 402 — R757 0 5% 1/16W MF 402
CPU_FB0_PLUS1 — R319 0 5% 1/16W MF 402 — R765 0 5% 1/16W MF 402
R712 1K 1% 1/16W MF 402

MAIN LOOP IS 3" (0.5 NS) SHORTER THAN MAXBUS CLOCK

ALLOWS ADJUSTING FB CLOCK FROM -3" (0.5 NS) TO +2" (0.35 NS) IN 1" (0.17 NS) INCREMENTS
PLACE ALL SERPENTINES ON INTERNAL LAYER

INT_ANALYZER_CLK — R764 10 5% 1/16W MF 402 — INT_V1
SYSCLK_CPU — R713 22 5% 1/16W MF 402 — SYSCLK_CPU_UF

INTREPID MAX

NOTICE OF PROPRIETARY PROPERTY
LAST MODIFIED=Wed May 28 20:23:08 2003
THE INFORMATION CONTAINED HEREIN IS THE PROPRIETARY PROPERTY OF APPLE COMPUTER, INC. THE POSSESSOR AGREES TO THE FOLLOWING
I TO MAINTAIN THE DOCUMENT IN CONFIDENCE
II NOT TO REPRODUCE OR COPY IT
III NOT TO REVEAL OR PUBLISH IN WHOLE OR PART

APPLE COMPUTER INC.

SIZE	DRAWING NUMBER	REV.
D	051-6490	A
SCALE: NONE	SHT 11 OF 74	

DRAWING

CR-12

INTREPID 1.1 SHOULD ALLOW MAXBUS
RAIL TO TURN OFF IN SLEEP

61C7 54C3 48B4 19D5 19A4 18D7 18C2 18A8 13C8

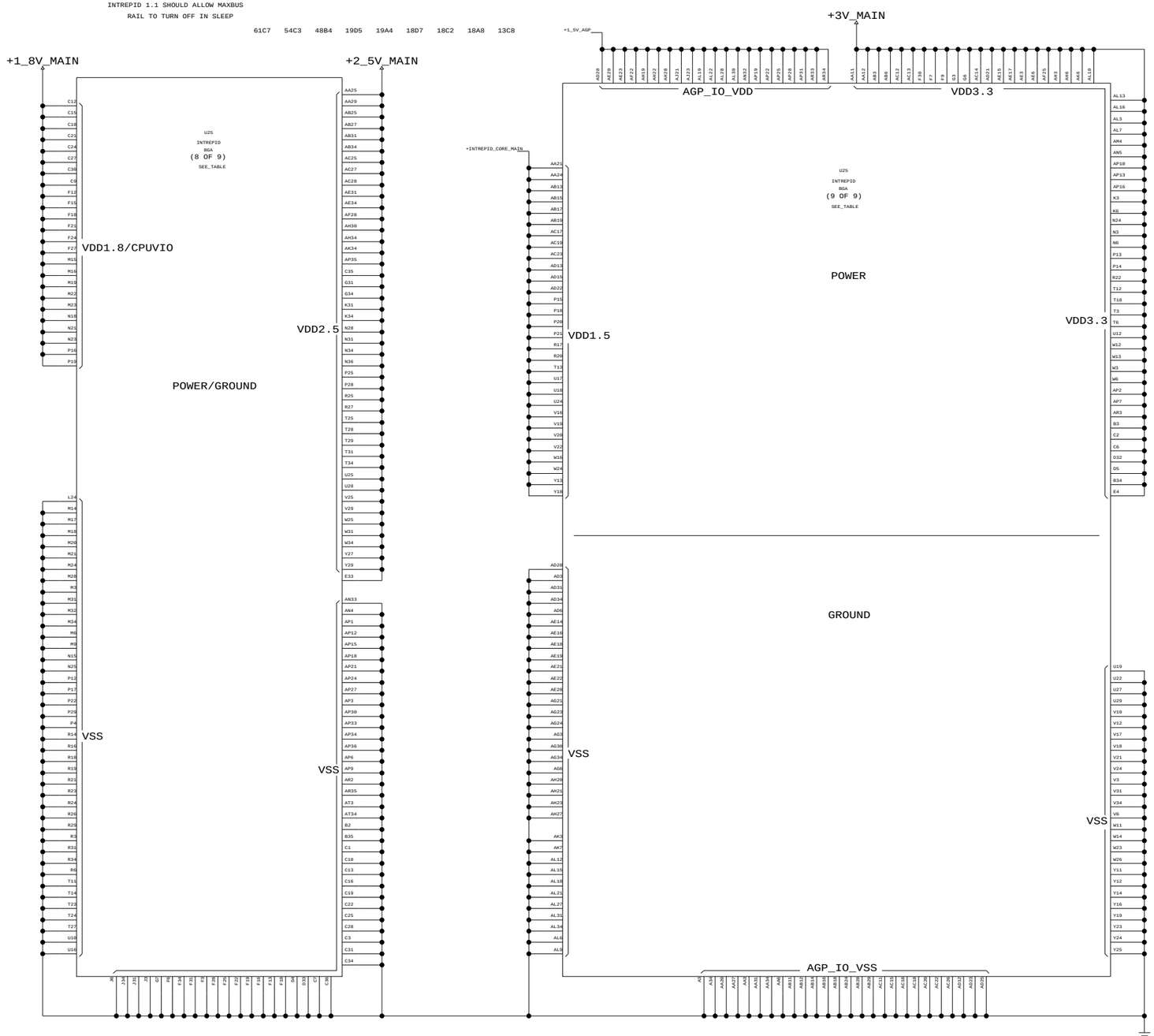

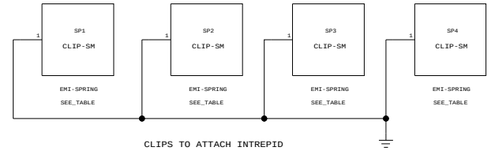

CLIPS TO ATTACH INTREPID
HEATSINK TO GND AT THE
FOUR CORNERS

INTREPID EMI CLIP SUPPORT

PART NUMBER	QTY	DESCRIPTION	REFERENCE DES	CRITICAL	BOM OPTION
870-1125	4	INTREPID EMI CLIP	SP1,SP2,SP3,SP4	CRITICAL	

INTREPID VERSION SUPPORT

PART NUMBER	QTY	DESCRIPTION	REFERENCE DES	CRITICAL	BOM OPTION
343S0198	1	IC,ASIC,INTREPID,V1.X	U25		INT_V1
343S0211	1	IC,ASIC,INTREPID,V2.1	U25		INT_V2

INTREPID POWER

NOTICE OF PROPRIETARY PROPERTY

LAST MODIFIED=Wed May 28 20:23:09 2003
THE INFORMATION CONTAINED HEREIN IS THE PROPRIETARY PROPERTY OF APPLE COMPUTER, INC. THE POSSESSOR AGREES TO THE FOLLOWING

I TO MAINTAIN THE DOCUMENT IN CONFIDENCE

II NOT TO REPRODUCE OR COPY IT

III NOT TO REVEAL OR PUBLISH IN WHOLE OR PART

APPLE COMPUTER INC.

SIZE	DRAWING NUMBER	REV.
D	051-6490	A
SCALE: NONE	SHT 12 OF 74	

DRAWING

+1_8V_MAIN

INTREPID MAXBUS DECOUPLING

24 Balls
4 X 10UF (0805)
32 X 0.22UF (0402)

49B2 48B3 12D6 61C7

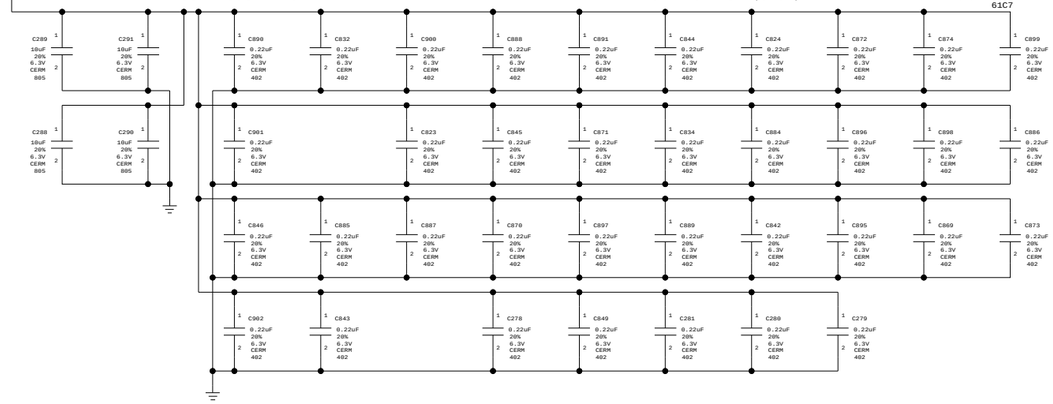

+INTREPID_CORE_MAIN

INTREPID CORE DECOUPLING

30 Balls
4 X 10UF (0805)
29 X 0.22UF (0402)

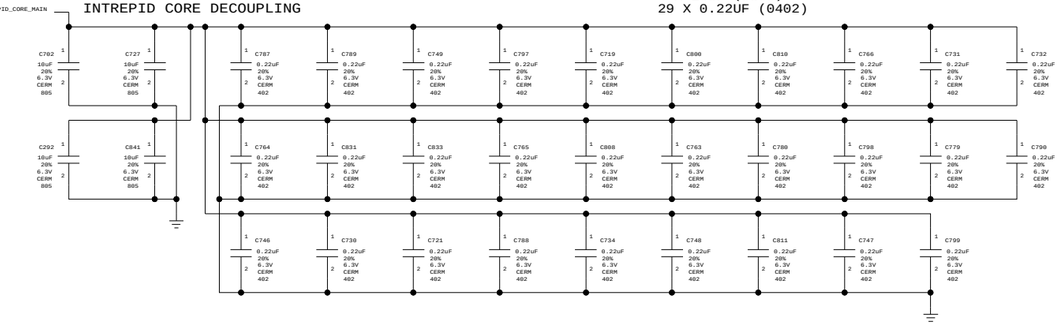

61C7
48B4
19A4
18C2
12D6
18A8
18D7
19D5
54C3

+1_5V_AGP

INTREPID AGP I/O DECOUPLING

21 Balls
4 X 10UF (0805)
24 X 0.22UF (0402)

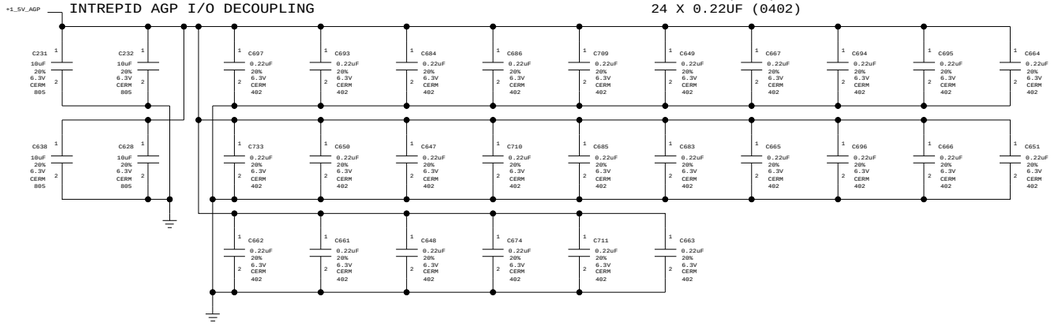

+3V_MAIN

INTREPID 3.3V DECOUPLING

57 Balls
4 X 10UF (0805)
68 X 0.22UF (0402)

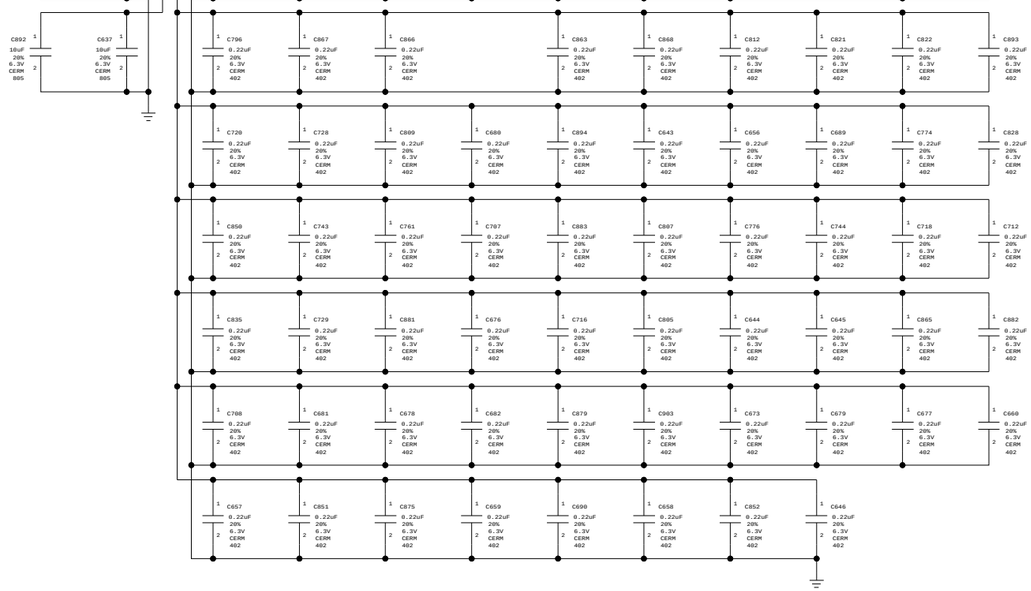

+2_5V_MAIN

INTREPID DDR DECOUPLING

44 Balls
4 X 10UF (0805)
51 X 0.22UF (0402)

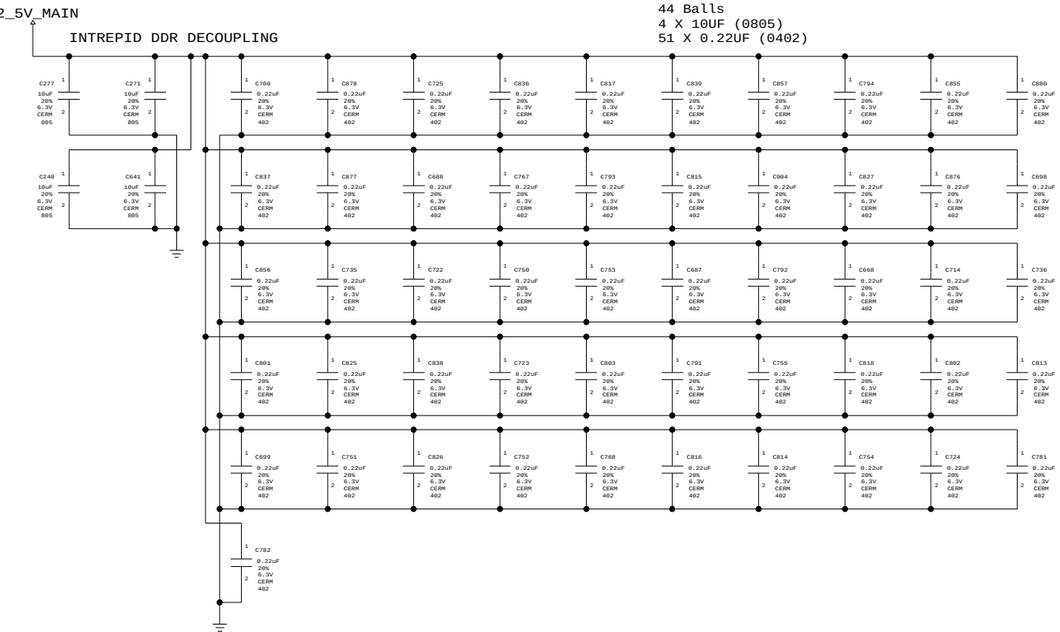

INTREPID BYPASS

NOTICE OF PROPRIETARY PROPERTY
LAST_MODIFIED=Wed May 28 20:23:12 2003
THE INFORMATION CONTAINED HEREIN IS THE PROPRIETARY PROPERTY OF APPLE COMPUTER, INC. THE POSSESSOR AGREES TO THE FOLLOWING
I TO MAINTAIN THE DOCUMENT IN CONFIDENCE
II NOT TO REPRODUCE OR COPY IT
III NOT TO REVEAL OR PUBLISH IN WHOLE OR PART

APPLE COMPUTER INC.

SIZE	DRAWING NUMBER	REV.
D	051-6490	A
SCALE: NONE	SHT 13 OF 74	

DRAWING

DDR MUX CONNECTIONS

0-ohm resistors to allow
rewiring if necessary

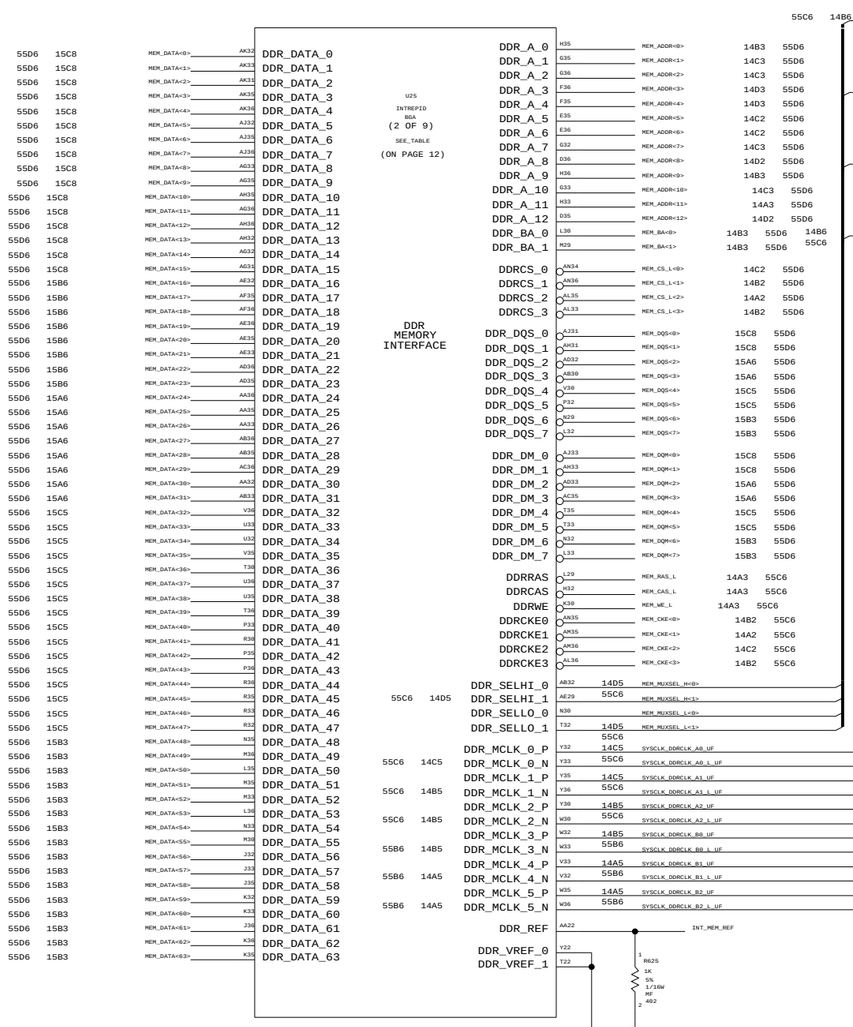

NOSTUFF R704 0 5% 1/16W MF 402 — MEM_MUXSEL_H<0> → MUX_SEL_H
R288 0 5% 1/16W MF 402 — MEM_MUXSEL_H<1>
NOSTUFF R260 0 5% 1/16W MF 402 — MEM_MUXSEL_L<0> → MUX_SEL_L
R261 0 5% 1/16W MF 402 — MEM_MUXSEL_L<1>

’0’S ARE SAME POLARITY (ACTIVE LO)
’1’S ARE SAME POLARITY (ACTIVE HI)
SEL = 0; HOST=B PORT, A PORT = 100 OHMGND
SEL = 1; HOST=A PORT, B PORT = 100 OHMGND

SERIES RESISTORS FOR CONTROL SIGNALS

PCK2059_NOT RP102 22 5% 1/16W SM1 — SYSCLK_DDRCLK_A0_UF → SYSCLK_DDRCLK_A0
PCK2059_NOT RP102 22 5% 1/16W SM1 — SYSCLK_DDRCLK_A0_L_UF → SYSCLK_DDRCLK_A0_L
PCK2059_NOT RP102 22 5% 1/16W SM1 — SYSCLK_DDRCLK_A1_UF → SYSCLK_DDRCLK_A1
PCK2059_NOT RP102 22 5% 1/16W SM1 — SYSCLK_DDRCLK_A1_L_UF → SYSCLK_DDRCLK_A1_L
PCK2059_NOT RP105 22 5% 1/16W SM1 — SYSCLK_DDRCLK_A2_UF → NC_SYSCLK_DDRCLK_A2 (NO_TEST)
PCK2059_NOT RP105 22 5% 1/16W SM1 — SYSCLK_DDRCLK_A2_L_UF → SYSCLK_DDRCLK_A2_L (NO_TEST)
PCK2059_NOT RP105 22 5% 1/16W SM1 — SYSCLK_DDRCLK_B0_UF → SYSCLK_DDRCLK_B0
PCK2059_NOT RP109 22 5% 1/16W SM1 — SYSCLK_DDRCLK_B0_L_UF → SYSCLK_DDRCLK_B0_L
PCK2059_NOT RP109 22 5% 1/16W SM1 — SYSCLK_DDRCLK_B1_UF → SYSCLK_DDRCLK_B1
PCK2059_NOT RP105 22 5% 1/16W SM1 — SYSCLK_DDRCLK_B1_L_UF → SYSCLK_DDRCLK_B1_L
PCK2059_NOT RP109 22 5% 1/16W SM1 — SYSCLK_DDRCLK_B2_UF → SYSCLK_DDRCLK_B2
PCK2059_NOT RP109 22 5% 1/16W SM1 — SYSCLK_DDRCLK_B2_L_UF → SYSCLK_DDRCLK_B2_L

RP68 22 5% 1/16W SM1 — MEM_ADDR<4> → RAM_ADDR<4>
RP71 22 5% 1/16W SM1 — MEM_ADDR<12> → RAM_ADDR<12>
RP68 22 5% 1/16W SM1 — MEM_ADDR<3> → RAM_ADDR<3>
RP71 22 5% 1/16W SM1 — MEM_ADDR<8> → RAM_ADDR<8>
RP68 22 5% 1/16W SM1 — MEM_ADDR<7> → RAM_ADDR<7>
RP71 22 5% 1/16W SM1 — MEM_ADDR<6> → RAM_ADDR<6>
RP68 22 5% 1/16W SM1 — MEM_ADDR<10> → RAM_ADDR<10>
RP71 22 5% 1/16W SM1 — MEM_ADDR<5> → RAM_ADDR<5>
RP62 22 5% 1/16W SM1 — MEM_ADDR<2> → RAM_ADDR<2>
RPS1 22 5% 1/16W SM1 — MEM_CKE<2> → RAM_CKE<2>
RP62 22 5% 1/16W SM1 — MEM_ADDR<1> → RAM_ADDR<1>
RPS1 22 5% 1/16W SM1 — MEM_CS_L<0> → RAM_CS_L<0>
RP62 22 5% 1/16W SM1 — MEM_ADDR<0> → RAM_ADDR<0>
RPS1 22 5% 1/16W SM1 — MEM_CKE<0> → RAM_CKE<0>
RP62 22 5% 1/16W SM1 — MEM_ADDR<9> → RAM_ADDR<9>
RPS1 22 5% 1/16W SM1 — MEM_CS_L<1> → RAM_CS_L<1>
RP116 22 5% 1/16W SM1 — MEM_BA<1> → RAM_BA<1>
RPS2 22 5% 1/16W SM1 — MEM_CS_L<3> → RAM_CS_L<3>
RP116 22 5% 1/16W SM1 — MEM_BA<0> → RAM_BA<0>
RPS2 22 5% 1/16W SM1 — MEM_CKE<3> → RAM_CKE<3>
RP116 22 5% 1/16W SM1 — MEM_WE_L → RAM_WE_L
RPS2 22 5% 1/16W SM1 — MEM_CS_L<2> → RAM_CS_L<2>
RP116 22 5% 1/16W SM1 — MEM_ADDR<11> → RAM_ADDR<11>
RPS2 22 5% 1/16W SM1 — MEM_CKE<1> → RAM_CKE<1>
R697 22 5% 1/16W MF 402 — MEM_RAS_L → RAM_RAS_L
R286 22 5% 1/16W MF 402 — MEM_CAS_L → RAM_CAS_L

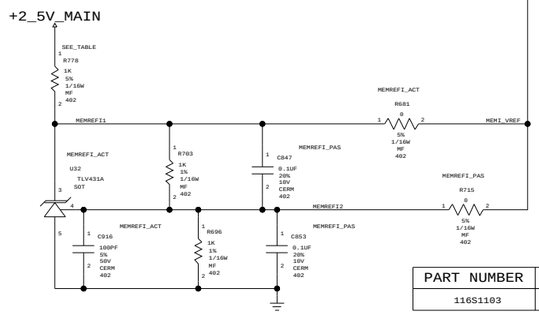

INTREPID DDR MEMORY REFERENCE SUPPORT

PART NUMBER	QTY	DESCRIPTION	REFERENCE DES	CRITICAL	BOM OPTION
116S1103	1	RES,1K-OHM,5%,1/16W,0402	R778		MEMREFI_ACT
116S1000	1	RES,0-OHM,5%,1/16W,0402	R778		MEMREFI_PAS

INTREPID DDR CNTRL

NOTICE OF PROPRIETARY PROPERTY
LAST MODIFIED=Wed May 28 20:22:58 2003
THE INFORMATION CONTAINED HEREIN IS THE PROPRIETARY PROPERTY OF APPLE COMPUTER, INC. THE POSSESSOR AGREES TO THE FOLLOWING
I TO MAINTAIN THE DOCUMENT IN CONFIDENCE
II NOT TO REPRODUCE OR COPY IT
III NOT TO REVEAL OR PUBLISH IN WHOLE OR PART

APPLE COMPUTER INC.

SIZE	DRAWING NUMBER	REV.
D	051-6490	A
SCALE: NONE	SHT 14 OF 74	

DRAWING

CR-15

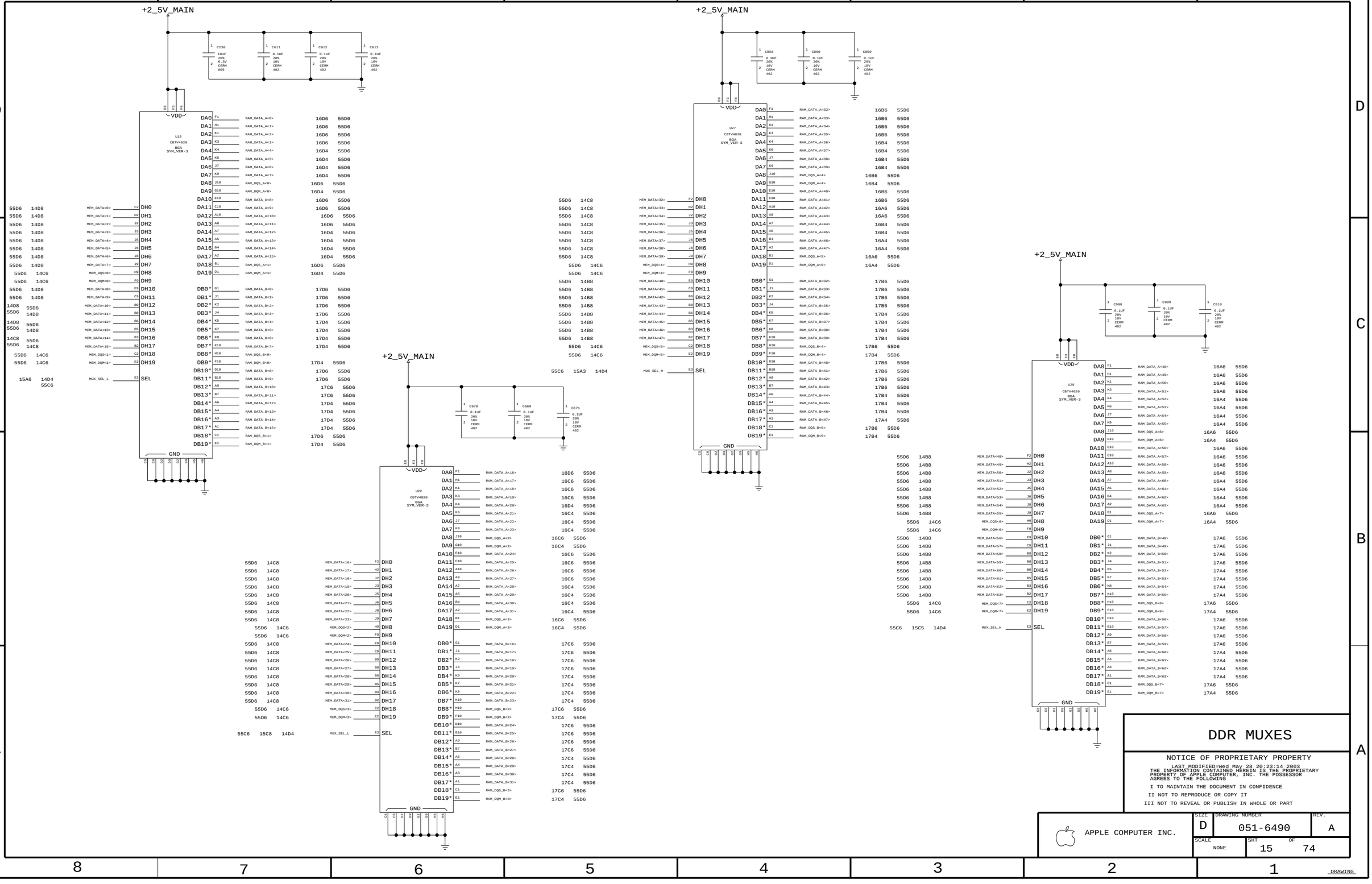
+2_5V_MAIN
C230 10UF 20% 6.3V CERM 805
C611 0.1UF 20% 10V CERM 402
C612 0.1UF 20% 10V CERM 402
C613 0.1UF 20% 10V CERM 402
U18 CBTV4020 BGA SYM_VER-3
VDD
GND
DA0 DA1 DA2 DA3 DA4 DA5 DA6 DA7 DA8 DA9 DA10 DA11 DA12 DA13 DA14 DA15 DA16 DA17 DA18 DA19
DB0* DB1* DB2* DB3* DB4* DB5* DB6* DB7* DB8* DB9* DB10* DB11* DB12* DB13* DB14* DB15* DB16* DB17* DB18* DB19*
SEL
RAM_DATA_A<0> RAM_DATA_A<1> RAM_DATA_A<2> RAM_DATA_A<3> RAM_DATA_A<4> RAM_DATA_A<5> RAM_DATA_A<6> RAM_DATA_A<7> RAM_DQS_A<0> RAM_DQM_A<0> RAM_DATA_A<8> RAM_DATA_A<9> RAM_DATA_A<10> RAM_DATA_A<11> RAM_DATA_A<12> RAM_DATA_A<13> RAM_DATA_A<14> RAM_DATA_A<15> RAM_DQS_A<1> RAM_DQM_A<1>
RAM_DATA_B<0> RAM_DATA_B<1> RAM_DATA_B<2> RAM_DATA_B<3> RAM_DATA_B<4> RAM_DATA_B<5> RAM_DATA_B<6> RAM_DATA_B<7> RAM_DQS_B<0> RAM_DQM_B<0> RAM_DATA_B<8> RAM_DATA_B<9> RAM_DATA_B<10> RAM_DATA_B<11> RAM_DATA_B<12> RAM_DATA_B<13> RAM_DATA_B<14> RAM_DATA_B<15> RAM_DQS_B<1> RAM_DQM_B<1>
MEM_DATA<0> MEM_DATA<1> MEM_DATA<2> MEM_DATA<3> MEM_DATA<4> MEM_DATA<5> MEM_DATA<6> MEM_DATA<7> MEM_DQS<0> MEM_DQM<0> MEM_DATA<8> MEM_DATA<9> MEM_DATA<10> MEM_DATA<11> MEM_DATA<12> MEM_DATA<13> MEM_DATA<14> MEM_DATA<15> MEM_DQS<1> MEM_DQM<1>
MUX_SEL_L
+2_5V_MAIN
C670 0.1UF 20% 10V CERM 402
C669 0.1UF 20% 10V CERM 402
C671 0.1UF 20% 10V CERM 402
U22 CBTV4020 BGA SYM_VER-3
VDD
GND
DA0 DA1 DA2 DA3 DA4 DA5 DA6 DA7 DA8 DA9 DA10 DA11 DA12 DA13 DA14 DA15 DA16 DA17 DA18 DA19
DB0* DB1* DB2* DB3* DB4* DB5* DB6* DB7* DB8* DB9* DB10* DB11* DB12* DB13* DB14* DB15* DB16* DB17* DB18* DB19*
SEL
RAM_DATA_A<16> RAM_DATA_A<17> RAM_DATA_A<18> RAM_DATA_A<19> RAM_DATA_A<20> RAM_DATA_A<21> RAM_DATA_A<22> RAM_DATA_A<23> RAM_DQS_A<2> RAM_DQM_A<2> RAM_DATA_A<24> RAM_DATA_A<25> RAM_DATA_A<26> RAM_DATA_A<27> RAM_DATA_A<28> RAM_DATA_A<29> RAM_DATA_A<30> RAM_DATA_A<31> RAM_DQS_A<3> RAM_DQM_A<3>
RAM_DATA_B<16> RAM_DATA_B<17> RAM_DATA_B<18> RAM_DATA_B<19> RAM_DATA_B<20> RAM_DATA_B<21> RAM_DATA_B<22> RAM_DATA_B<23> RAM_DQS_B<2> RAM_DQM_B<2> RAM_DATA_B<24> RAM_DATA_B<25> RAM_DATA_B<26> RAM_DATA_B<27> RAM_DATA_B<28> RAM_DATA_B<29> RAM_DATA_B<30> RAM_DATA_B<31> RAM_DQS_B<3> RAM_DQM_B<3>
MEM_DATA<16> MEM_DATA<17> MEM_DATA<18> MEM_DATA<19> MEM_DATA<20> MEM_DATA<21> MEM_DATA<22> MEM_DATA<23> MEM_DQS<2> MEM_DQM<2> MEM_DATA<24> MEM_DATA<25> MEM_DATA<26> MEM_DATA<27> MEM_DATA<28> MEM_DATA<29> MEM_DATA<30> MEM_DATA<31> MEM_DQS<3> MEM_DQM<3>
MUX_SEL_L
+2_5V_MAIN
C858 0.1UF 20% 10V CERM 402
C860 0.1UF 20% 10V CERM 402
C859 0.1UF 20% 10V CERM 402
U27 CBTV4020 BGA SYM_VER-3
VDD
GND
DA0 DA1 DA2 DA3 DA4 DA5 DA6 DA7 DA8 DA9 DA10 DA11 DA12 DA13 DA14 DA15 DA16 DA17 DA18 DA19
DB0* DB1* DB2* DB3* DB4* DB5* DB6* DB7* DB8* DB9* DB10* DB11* DB12* DB13* DB14* DB15* DB16* DB17* DB18* DB19*
SEL
RAM_DATA_A<32> RAM_DATA_A<33> RAM_DATA_A<34> RAM_DATA_A<35> RAM_DATA_A<36> RAM_DATA_A<37> RAM_DATA_A<38> RAM_DATA_A<39> RAM_DQS_A<4> RAM_DQM_A<4> RAM_DATA_A<40> RAM_DATA_A<41> RAM_DATA_A<42> RAM_DATA_A<43> RAM_DATA_A<44> RAM_DATA_A<45> RAM_DATA_A<46> RAM_DATA_A<47> RAM_DQS_A<5> RAM_DQM_A<5>
RAM_DATA_B<32> RAM_DATA_B<33> RAM_DATA_B<34> RAM_DATA_B<35> RAM_DATA_B<36> RAM_DATA_B<37> RAM_DATA_B<38> RAM_DATA_B<39> RAM_DQS_B<4> RAM_DQM_B<4> RAM_DATA_B<40> RAM_DATA_B<41> RAM_DATA_B<42> RAM_DATA_B<43> RAM_DATA_B<44> RAM_DATA_B<45> RAM_DATA_B<46> RAM_DATA_B<47> RAM_DQS_B<5> RAM_DQM_B<5>
MEM_DATA<32> MEM_DATA<33> MEM_DATA<34> MEM_DATA<35> MEM_DATA<36> MEM_DATA<37> MEM_DATA<38> MEM_DATA<39> MEM_DQS<4> MEM_DQM<4> MEM_DATA<40> MEM_DATA<41> MEM_DATA<42> MEM_DATA<43> MEM_DATA<44> MEM_DATA<45> MEM_DATA<46> MEM_DATA<47> MEM_DQS<5> MEM_DQM<5>
MUX_SEL_H
+2_5V_MAIN
C900 0.1UF 20% 10V CERM 402
C909 0.1UF 20% 10V CERM 402
C910 0.1UF 20% 10V CERM 402
U29 CBTV4020 BGA SYM_VER-3
VDD
GND
DA0 DA1 DA2 DA3 DA4 DA5 DA6 DA7 DA8 DA9 DA10 DA11 DA12 DA13 DA14 DA15 DA16 DA17 DA18 DA19
DB0* DB1* DB2* DB3* DB4* DB5* DB6* DB7* DB8* DB9* DB10* DB11* DB12* DB13* DB14* DB15* DB16* DB17* DB18* DB19*
SEL
RAM_DATA_A<48> RAM_DATA_A<49> RAM_DATA_A<50> RAM_DATA_A<51> RAM_DATA_A<52> RAM_DATA_A<53> RAM_DATA_A<54> RAM_DATA_A<55> RAM_DQS_A<6> RAM_DQM_A<6> RAM_DATA_A<56> RAM_DATA_A<57> RAM_DATA_A<58> RAM_DATA_A<59> RAM_DATA_A<60> RAM_DATA_A<61> RAM_DATA_A<62> RAM_DATA_A<63> RAM_DQS_A<7> RAM_DQM_A<7>
RAM_DATA_B<48> RAM_DATA_B<49> RAM_DATA_B<50> RAM_DATA_B<51> RAM_DATA_B<52> RAM_DATA_B<53> RAM_DATA_B<54> RAM_DATA_B<55> RAM_DQS_B<6> RAM_DQM_B<6> RAM_DATA_B<56> RAM_DATA_B<57> RAM_DATA_B<58> RAM_DATA_B<59> RAM_DATA_B<60> RAM_DATA_B<61> RAM_DATA_B<62> RAM_DATA_B<63> RAM_DQS_B<7> RAM_DQM_B<7>
MEM_DATA<48> MEM_DATA<49> MEM_DATA<50> MEM_DATA<51> MEM_DATA<52> MEM_DATA<53> MEM_DATA<54> MEM_DATA<55> MEM_DQS<6> MEM_DQM<6> MEM_DATA<56> MEM_DATA<57> MEM_DATA<58> MEM_DATA<59> MEM_DATA<60> MEM_DATA<61> MEM_DATA<62> MEM_DATA<63> MEM_DQS<7> MEM_DQM<7>
MUX_SEL_H
DDR MUXES
NOTICE OF PROPRIETARY PROPERTY
LAST MODIFIED=Wed May 28 20:23:14 2003
THE INFORMATION CONTAINED HEREIN IS THE PROPRIETARY PROPERTY OF APPLE COMPUTER, INC. THE POSSESSOR AGREES TO THE FOLLOWING
I TO MAINTAIN THE DOCUMENT IN CONFIDENCE
II NOT TO REPRODUCE OR COPY IT
III NOT TO REVEAL OR PUBLISH IN WHOLE OR PART
APPLE COMPUTER INC.
SIZE D
DRAWING NUMBER 051-6490
REV. A
SCALE NONE
SHT 15 OF 74
DRAWING

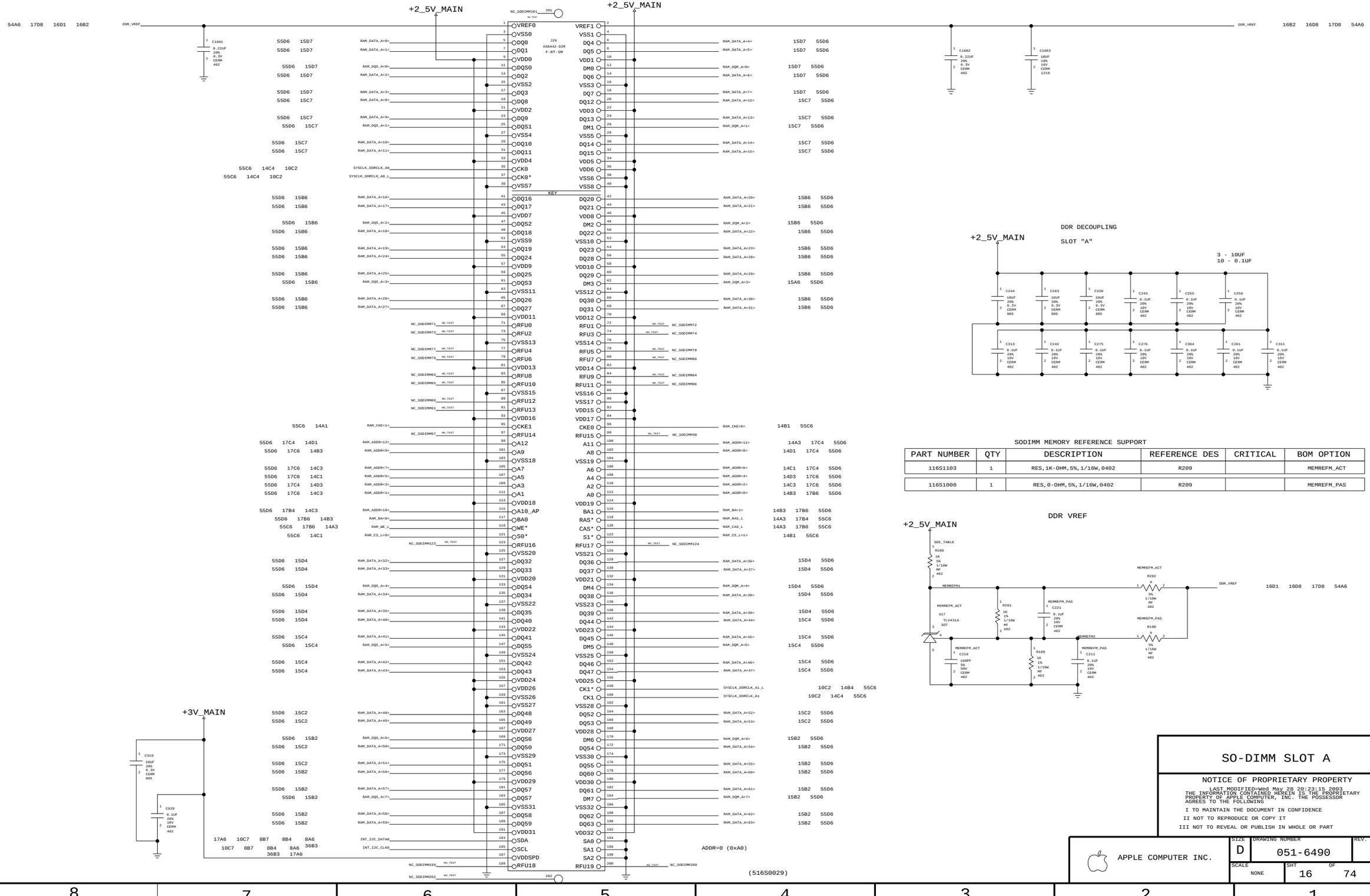

PART NUMBER	QTY	DESCRIPTION	REFERENCE DES	CRITICAL	BOM OPTION
116S1103	1	RES,1K-OHM,5%,1/16W,0402	R209		MEMREFM_ACT
116S1000	1	RES,0-OHM,5%,1/16W,0402	R209		MEMREFM_PAS

CR-17

+2_5V_MAIN

+2_5V_MAIN

CRITICAL
J11
TH-DDR-DIMM-71243
SX64 DIMM

	FRONT SIDE		REAR SIDE	
54A6 16D8 16D1 16B2	DDR_VREF	1	VSS	93
55D6 15C7	RAM_DATA_B<0>	2	VREF	94
		3	DQ0	95
55D6 15C7	RAM_DATA_B<1>	4	VSS	96
55D6 15C7	RAM_DQS_B<0>	5	DQ1	97
55D6 15C7	RAM_DATA_B<2>	6	DQS0	98
		7	DQ2	99
55D6 15C7	RAM_DATA_B<3>	8	VDD	100
	NC_BIGDIMM9 NO_TEST	9	DQ3	101
	NC_BIGDIMM10 NO_TEST	10	NC	102
		11	NC	103
55D6 15C7	RAM_DATA_B<8>	12	VSS	104
55D6 15C7	RAM_DATA_B<9>	13	DQ8	105
55D6 15B7	RAM_DQS_B<1>	14	DQ9	106
		15	DQS1	107
55B6 14A4 10C2	SYSCLK_DDRCLK_B1	16	VDDQ	108
55B6 14A4 10C2	SYSCLK_DDRCLK_B1_L	17	CK1	109
		18	CK1*	110
55D6 15C7	RAM_DATA_B<10>	19	VSS	111
55D6 15C7	RAM_DATA_B<11>	20	DQ10	112
55C6 14C1	RAM_CKE<2>	21	DQ11	113
		22	CKE0	114
55D6 15A6	RAM_DATA_B<16>	23	VDDQ	115
55D6 15A6	RAM_DATA_B<17>	24	DQ16	116
55D6 15A6	RAM_DQS_B<2>	25	DQ17	117
		26	DQS2	118
55D6 16B6 14B3	RAM_ADDR<9>	27	VSS	119
55D6 15A6	RAM_DATA_B<18>	28	A9	120
55D6 16B6 14C3	RAM_ADDR<7>	29	DQ18	121
		30	A7	122
55D6 15A6	RAM_DATA_B<19>	31	VDDQ	123
55D6 16B6 14C1	RAM_ADDR<5>	32	DQ19	124
55D6 15A6	RAM_DATA_B<24>	33	A5	125
		34	DQ24	126
55D6 15A6	RAM_DATA_B<25>	35	VSS	127
55D6 15A6	RAM_DQS_B<3>	36	DQ25	128
55D6 16B4 14D3	RAM_ADDR<4>	37	DQS3	129
		38	A4	130
55D6 15A6	RAM_DATA_B<26>	39	VDD	131
55D6 15A6	RAM_DATA_B<27>	40	DQ26	132
55D6 16B4 14C3	RAM_ADDR<2>	41	DQ27	133
		42	A2	134
55D6 16B6 14C3	RAM_ADDR<1>	43	VSS	135
	NC_BIGDIMM44 NO_TEST	44	A1	136
	NC_BIGDIMM45 NO_TEST	45	NC	137
		46	NC	138
	NC_BIGDIMM47 NO_TEST	47	VDD	139
55D6 16B4 14B3	RAM_ADDR<0>	48	NC	140
	NC_BIGDIMM49 NO_TEST	49	A0	141
		50	NC	142
	NC_BIGDIMM51 NO_TEST	51	VSS	143
55D6 16B4 14B3	RAM_BA<1>	52	NC	144
55D6 15C4	RAM_DATA_B<32>	53	BA1	145
		54	VSS	146
55D6 15C4	RAM_DATA_B<33>	55	VDDQ	147
55D6 15C4	RAM_DQS_B<4>	56	DQ33	148
55D6 15C4	RAM_DATA_B<34>	57	DQS4	149
		58	DQ34	150
55D6 16B6 14B3	RAM_BA<0>	59	VSS	151
55D6 15C4	RAM_DATA_B<35>	60	BA0	152
55D6 15C4	RAM_DATA_B<40>	61	DQ35	153
		62	DQ40	154
55C6 16B6 14A3	RAM_WE_L	63	VDDQ	155
55D6 15C4	RAM_DATA_B<41>	64	WE*	156
55C6 16B4 14A3	RAM_CAS_L	65	DQ41	157
		66	CAS*	158
55D6 15B4	RAM_DQS_B<5>	67	VSS	159
55D6 15C4	RAM_DATA_B<42>	68	DQS5	160
55D6 15C4	RAM_DATA_B<43>	69	DQ42	161
		70	DQ43	162
	NC_BIGDIMM71 NO_TEST	71	VDD	163
55D6 15B2	RAM_DATA_B<48>	72	NC,S2*	164
55D6 15B2	RAM_DATA_B<49>	73	DQ48	165
		74	DQ49	166
55B6 14A4 10B2	SYSCLK_DDRCLK_B2_L	75	VSS	167
55B6 14A4 10B2	SYSCLK_DDRCLK_B2	76	CK2*	168
		77	CK2	169
55D6 15B2	RAM_DQS_B<6>	78	VDDQ	170
55D6 15B2	RAM_DATA_B<50>	79	DQS6	171
55D6 15B2	RAM_DATA_B<51>	80	DQ50	172
		81	DQ51	173
55D6 15B2	RAM_DATA_B<56>	82	VSS	174
55D6 15A2	RAM_DATA_B<57>	83	VDDID	175
		84	DQ56	176
55D6 15A2	RAM_DQS_B<7>	85	DQ57	177
55D6 15A2	RAM_DATA_B<58>	86	VSS	178
55D6 15A2	RAM_DATA_B<59>	87	DQS7	179
		88	DQ58	180
		89	DQ59	181
		90	VSS	182
36B3 16A6 10C7 8B7 8B4 8A6	INT_I2C_DATA0	91	WP	183
36B3 16A6 10C7 8B7 8B4 8A6	INT_I2C_CLK0	92	SDA	184
			SCL	

RAM_DATA_B<4>	15C7	55D6
RAM_DATA_B<5>	15C7	55D6
RAM_DQM_B<0>	15C7	55D6
RAM_DATA_B<6>	15C7	55D6
RAM_DATA_B<7>	15C7	55D6
NO_TEST NC_BIGDIMM101		
NO_TEST NC_BIGDIMM102		
NO_TEST NC_BIGDIMM103		
RAM_DATA_B<12>	15C7	55D6
RAM_DATA_B<13>	15B7	55D6
RAM_DQM_B<1>	15B7	55D6
RAM_DATA_B<14>	15B7	55D6
RAM_DATA_B<15>	15B7	55D6
RAM_CKE<3>	14B1	55C6
NO_TEST NC_BIGDIMM113		
RAM_DATA_B<20>	15A6	55D6
RAM_ADDR<12>	14D1	16B6 55D6
RAM_DATA_B<21>	15A6	55D6
RAM_ADDR<11>	14A3	16B4 55D6
RAM_DQM_B<2>	15A6	55D6
RAM_DATA_B<22>	15A6	55D6
RAM_ADDR<8>	14D1	16B4 55D6
RAM_DATA_B<23>	15A6	55D6
RAM_ADDR<6>	14C1	16B4 55D6
RAM_DATA_B<28>	15A6	55D6
RAM_DATA_B<29>	15A6	55D6
RAM_DQM_B<3>	15A6	55D6
RAM_ADDR<3>	14D3	16B6 55D6
RAM_DATA_B<30>	15A6	55D6
RAM_DATA_B<31>	15A6	55D6
NO_TEST NC_BIGDIMM134		
NO_TEST NC_BIGDIMM135		
SYSCLK_DDRCLK_B0	10C2	14B4 55B6
SYSCLK_DDRCLK_B0_L	10C2	14B4 55B6
NO_TEST NC_BIGDIMM140		
RAM_ADDR<10>	14C3	16B6 55D6
NO_TEST NC_BIGDIMM142		
NO_TEST NC_BIGDIMM144		
RAM_DATA_B<36>	15C4	55D6
RAM_DATA_B<37>	15C4	55D6
RAM_DQM_B<4>	15C4	55D6
RAM_DATA_B<38>	15C4	55D6
RAM_DATA_B<39>	15C4	55D6
RAM_DATA_B<44>	15C4	55D6
RAM_RAS_L	14A3	16B4 55C6
RAM_DATA_B<45>	15C4	55D6
RAM_CS_L<2>	14A1	55C6
RAM_CS_L<3>	14B1	55C6
RAM_DQM_B<5>	15B4	55D6
RAM_DATA_B<46>	15B4	55D6
RAM_DATA_B<47>	15B4	55D6
NO_TEST NC_BIGDIMM163		
RAM_DATA_B<52>	15B2	55D6
RAM_DATA_B<53>	15B2	55D6
NO_TEST NC_BIGDIMM167		
RAM_DQM_B<6>	15B2	55D6
RAM_DATA_B<54>	15B2	55D6
RAM_DATA_B<55>	15B2	55D6
NO_TEST NC_BIGDIMM173		
RAM_DATA_B<60>	15A2	55D6
RAM_DATA_B<61>	15A2	55D6
RAM_DQM_B<7>	15A2	55D6
RAM_DATA_B<62>	15A2	55D6
RAM_DATA_B<63>	15A2	55D6
RAM_SA0		

ADDR = 1 (0XA2)

C1701 10UF 10% 16V CERM 1210
C1702 0.22UF 20% 6.3V CERM 402

+2_5V_MAIN

R809 1K 5% 1/16W MF 402
M_VDDID
R796 1K 5% 1/16W MF 402
M_SPD_WP

+3V_MAIN

R825 1K 5% 1/16W MF 402
C945 10UF 20% 6.3V CERM 805
C943 0.1UF 20% 10V CERM 402

(516-1001)

DDR SDRAM SLOT B

DDR DECOUPLING

+2_5V_MAIN

SLOT "B"

3 - 10UF
10 - 0.1UF

C562 10UF 20% 6.3V CERM 805
C726 10UF 20% 6.3V CERM 805
C936 10UF 20% 6.3V CERM 805
C864 0.1UF 20% 10V CERM 402
C922 0.1UF 20% 10V CERM 402
C624 0.1UF 20% 10V CERM 402
C819 0.1UF 20% 10V CERM 402
C925 0.1UF 20% 10V CERM 402
C741 0.1UF 20% 10V CERM 402
C914 0.1UF 20% 10V CERM 402
C593 0.1UF 20% 10V CERM 402
C602 0.1UF 20% 10V CERM 402
C672 0.1UF 20% 10V CERM 402

BIG DIMM SLOT B

NOTICE OF PROPRIETARY PROPERTY

LAST MODIFIED=Wed May 28 20:23:16 2003
THE INFORMATION CONTAINED HEREIN IS THE PROPRIETARY PROPERTY OF APPLE COMPUTER, INC. THE POSSESSOR AGREES TO THE FOLLOWING

I TO MAINTAIN THE DOCUMENT IN CONFIDENCE

II NOT TO REPRODUCE OR COPY IT

III NOT TO REVEAL OR PUBLISH IN WHOLE OR PART

APPLE COMPUTER INC.

SIZE	DRAWING NUMBER	REV.
D	051-6490	A

SCALE	SHT	OF
NONE	17	74

DRAWING

CR-18

INTREPID AGP CLK IS 1.5V OUT

NEED 3.3V SWING FOR VIDEO CHIPS

VERSION 1 WORKAROUND IS LA CLOCK

VERSION 2 WORKAROUND IS UNUSED PIN

THESE RESISTORS SHARE THE SAME PAD

2" LONGER (0.5NS SLOWER) — AGP (ZERO DELAY) — 2" SHORTER (0.5NS FASTER)

PLACE ALL SERPENTINES ON INTERNAL LAYER

GPU AGP I/O REFERENCE

(PLACE CLOSE TO GPU AGP BALLS)

AGP INTERFACES

VOUT = AGPIO (1.5V)

VIN = VCORE (1.5V)

AGP PULL-UPS/PULL DOWNS

+3V_MAIN

STP_AGP	AGPREQ
AGPPVT	AGPGNT
AGPVREF0	AGPAD0
AGPVREF1	AGPAD1
AGP_BUSY	AGPAD2
AGP_CLK	AGPAD3
AGP_FB_IN	AGPAD4
AGP_FB_OUT	AGPAD5
	AGPAD6
	AGPAD7
	AGPAD8
	AGPAD9
	AGPAD10
	AGPAD11
	AGPAD12
	AGPAD13
	AGPAD14
	AGPAD15
	AGPAD16
	AGPAD17
	AGPAD18
	AGPAD19
	AGPAD20
	AGPAD21
	AGPAD22
	AGPAD23
	AGPAD24
	AGPAD25
	AGPAD26
	AGPAD27
	AGPAD28
	AGPAD29
	AGPAD30
	AGPAD31
	AGPCBE_0
	AGPCBE_1
	AGPCBE_2
	AGPCBE_3
	AGPPAR
	AGPFRAME
	AGPIRDY
	AGPTRDY
	AGPSTOP
	AGPDEVSEL
	AGP_SBA0
	AGP_SBA1
	AGP_SBA2
	AGP_SBA3
	AGP_SBA4
	AGP_SBA5
	AGP_SBA6
	AGP_SBA7
	AGP_SB_STB_P
	AGP_SB_STB_N
	AGP_ST0
	AGP_ST1
	AGP_ST2
	AGP_AD_STB0_P
	AGP_AD_STB0_N
	AGP_AD_STB1_P
	AGP_AD_STB1_N
	AGPPIPE
	AGPRBF
AGP_WBF	

TITLE	INTREPID AGP
NOTICE OF PROPRIETARY PROPERTY	LAST MODIFIED=Wed May 28 20:23:17 2003 THE INFORMATION CONTAINED HEREIN IS THE PROPRIETARY PROPERTY OF APPLE COMPUTER, INC. THE POSSESSOR AGREES TO THE FOLLOWING I TO MAINTAIN THE DOCUMENT IN CONFIDENCE II NOT TO REPRODUCE OR COPY IT III NOT TO REVEAL OR PUBLISH IN WHOLE OR PART
APPLE COMPUTER INC.	SIZE D — DRAWING NUMBER 051-6490 — REV. A — SCALE NONE — SHT 18 OF 74

DRAWING

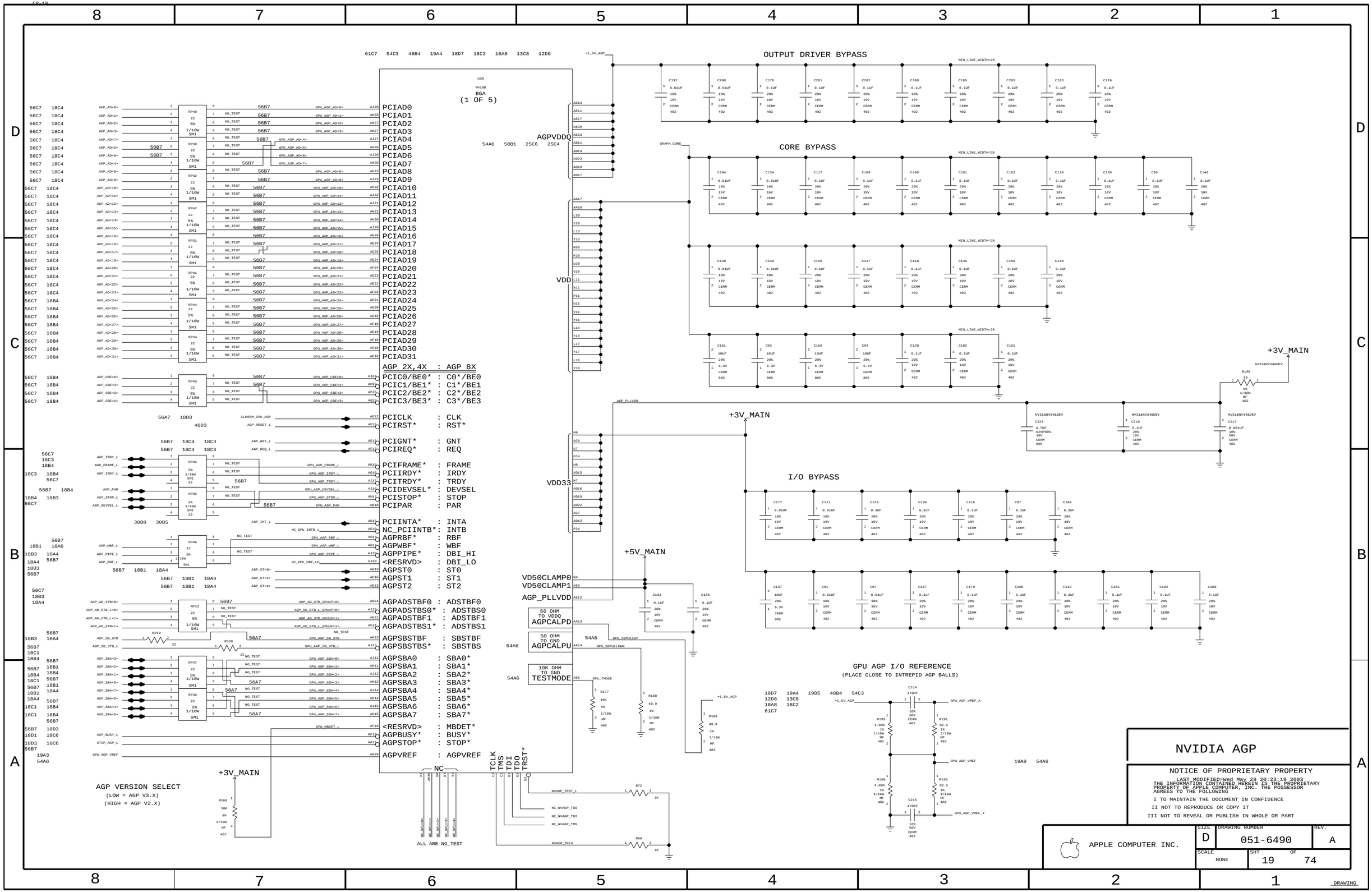

NVIDIA AGP

NOTICE OF PROPRIETARY PROPERTY

LAST MODIFIED=Wed May 28 20:23:19 2003
THE INFORMATION CONTAINED HEREIN IS THE PROPRIETARY PROPERTY OF APPLE COMPUTER, INC. THE POSSESSOR AGREES TO THE FOLLOWING

I TO MAINTAIN THE DOCUMENT IN CONFIDENCE
II NOT TO REPRODUCE OR COPY IT
III NOT TO REVEAL OR PUBLISH IN WHOLE OR PART

APPLE COMPUTER INC.

SIZE	DRAWING NUMBER	REV.
D	051-6490	A
SCALE NONE	SHT 19	OF 74

DRAWING

+2_5V_MAIN

EVENLY DISTRIBUTE 0.01UF & 0.1 UF CAPS

AMONGST FBVDDQ PINS ON NV ASIC

DQM R'S CLOSE TO GPU

OTHER R'S BETWEEN GPU & MEMORY

U39 NV10M BGA (3 OF 5)

FBVDDQ

NC_VTT

GND

FBAD0 FBAD1 FBAD2 FBAD3 FBAD4 FBAD5 FBAD6 FBAD7 FBAD8 FBAD9 FBAD10 FBAD11 FBAD12 FBAD13 FBAD14 FBAD15 FBAD16 FBAD17 FBAD18 FBAD19 FBAD20 FBAD21 FBAD22 FBAD23 FBAD24 FBAD25 FBAD26 FBAD27 FBAD28 FBAD29 FBAD30 FBAD31 FBAD32 FBAD33 FBAD34 FBAD35 FBAD36 FBAD37 FBAD38 FBAD39 FBAD40 FBAD41 FBAD42 FBAD43 FBAD44 FBAD45 FBAD46 FBAD47 FBAD48 FBAD49 FBAD50 FBAD51 FBAD52 FBAD53 FBAD54 FBAD55 FBAD56 FBAD57 FBAD58 FBAD59 FBAD60 FBAD61 FBAD62 FBAD63

FBADQM0 FBADQM1 FBADQM2 FBADQM3 FBADQM4 FBADQM5 FBADQM6 FBADQM7

FBA0 FBA1 FBA2 FBA3 FBA4 FBA5 FBA6 FBA7 FBA8 FBA9 FBA10 FBA11 FBA12

FBABA0 FBABA1

FBARAS* FBACAS* FBAWE* FBACS0* FBACS1*

FBVREF

ROMA14 ROMA15 ROMCS*

FBACLK0 FBACLK0* FBACLK1 FBACLK1*

FBADQS0 FBADQS1 FBADQS2 FBADQS3 FBADQS4 FBADQS5 FBADQS6 FBADQS7

NC_FBADQS0* NC_FBADQS1* NC_FBADQS2* NC_FBADQS3* NC_FBADQS4* NC_FBADQS5* NC_FBADQS6* NC_FBADQS7*

FBCAL_PD_VDDQ FBCAL_PU_GND FBCAL_TERM_GND FBCAL_CLK_GND FB_DLLVDD FBACKE

U39 NV10M BGA (4 OF 5)

FBD0 FBD1 FBD2 FBD3 FBD4 FBD5 FBD6 FBD7 FBD8 FBD9 FBD10 FBD11 FBD12 FBD13 FBD14 FBD15 FBD16 FBD17 FBD18 FBD19 FBD20 FBD21 FBD22 FBD23 FBD24 FBD25 FBD26 FBD27 FBD28 FBD29 FBD30 FBD31 FBD32 FBD33 FBD34 FBD35 FBD36 FBD37 FBD38 FBD39 FBD40 FBD41 FBD42 FBD43 FBD44 FBD45 FBD46 FBD47 FBD48 FBD49 FBD50 FBD51 FBD52 FBD53 FBD54 FBD55 FBD56 FBD57 FBD58 FBD59 FBD60 FBD61 FBD62 FBD63

THERMAL GND

FBCDQM0 FBCDQM1 FBCDQM2 FBCDQM3 FBCDQM4 FBCDQM5 FBCDQM6 FBCDQM7

FBCDQS0 FBCDQS1 FBCDQS2 FBCDQS3 FBCDQS4 FBCDQS5 FBCDQS6 FBCDQS7

FBCA0 FBCA1 FBCA2 FBCA3 FBCA4 FBCA5 FBCA6 FBCA7 FBCA8 FBCA9 FBCA10 FBCA11 FBCA12

FBCBA0 FBCBA1

FBBCLK0 FBBCLK0* FBBCLK1 FBBCLK1*

NC_FBCDQS0* NC_FBCDQS1* NC_FBCDQS2* NC_FBCDQS3* NC_FBCDQS4* NC_FBCDQS5* NC_FBCDQS6* NC_FBCDQS7*

FBCRAS* FBCCAS* FBCWE* FBCCS0* FBCCS1* FBCCKE

+3V_MAIN

NVIDIA VREF

WEAK PULL-DOWN RECOMMENDED BY NVIDIA

WEAK PULL-DOWN RECOMMENDED BY NVIDIA

NVIDIA FRAME BUFFER

NOTICE OF PROPRIETARY PROPERTY
LAST MODIFIED:Wed May 28 20:23:22 2003
THE INFORMATION CONTAINED HEREIN IS THE PROPRIETARY PROPERTY OF APPLE COMPUTER, INC. THE POSSESSOR AGREES TO THE FOLLOWING
I TO MAINTAIN THE DOCUMENT IN CONFIDENCE
II NOT TO REPRODUCE OR COPY IT
III NOT TO REVEAL OR PUBLISH IN WHOLE OR PART

APPLE COMPUTER INC.

SIZE	DRAWING NUMBER	REV.
E	051-6490	A
SCALE: NONE	SHT 20 OF 74	

DRAWING

CR-21

PLACE R'S BETWEEN GPU & MEMORY

57D3	20G8	FBD<0>	NO_TEST	15	RP20	RFBD<0>	22C5	57D3
57D3	20G8	FBD<1>	NO_TEST	15	RP20	RFBD<1>	22C5	57D3
57D3	20G8	FBD<2>	NO_TEST	15	RP20	RFBD<2>	22C5	57D3
57D3	20G8	FBD<3>	NO_TEST	15	RP20	RFBD<3>	22C5	57D3
57D3	20G8	FBD<4>	NO_TEST	15	RP19	RFBD<4>	22C5	57D3
57D3	20G8	FBD<5>		15	RP19	RFBD<5>	22C5	57D3
57D3	20G8	FBD<6>	NO_TEST	15	RP19	RFBD<6>	22C5	57D3
57D3	20G8	FBD<7>	NO_TEST	15	RP19	RFBD<7>	22C5	57D3
57D3	20G8	FBD<8>	NO_TEST	15	RP21	RFBD<8>	22C5	57D3
57D3	20G8	FBD<9>		15	RP21	RFBD<9>	22C5	57D3
57D3	20G8	FBD<10>	NO_TEST	15	RP21	RFBD<10>	22C5	57D3
57D3	20G8	FBD<11>	NO_TEST	15	RP21	RFBD<11>	22C5	57D3
57D3	20G8	FBD<12>	NO_TEST	15	RP18	RFBD<12>	22C5	57D3
57D3	20G8	FBD<13>		15	RP18	RFBD<13>	22C5	57D3
57D3	20G8	FBD<14>	NO_TEST	15	RP18	RFBD<14>	22C5	57D3
57D3	20G8	FBD<15>	NO_TEST	15	RP18	RFBD<15>	22C5	57D3
57D3	20G8	FBD<16>		15	RP91	RFBD<16>	22C5	57D3
57D3	20G8	FBD<17>	NO_TEST	15	RP91	RFBD<17>	22C5	57D3
57D3	20G8	FBD<18>	NO_TEST	15	RP91	RFBD<18>	22C5	57D3
57D3	20G8	FBD<19>	NO_TEST	15	RP91	RFBD<19>	22C5	57D3
57D3	20G8	FBD<20>		15	RP90	RFBD<20>	22C5	57D3
57D3	20G8	FBD<21>	NO_TEST	15	RP90	RFBD<21>	22C5	57D3
57D3	20G8	FBD<22>	NO_TEST	15	RP90	RFBD<22>	22C5	57D3
57D3	20G8	FBD<23>	NO_TEST	15	RP90	RFBD<23>	22C5	57D3
57D3	20G8	FBD<24>		15	RP92	RFBD<24>	22C5	57D3
57D3	20F8	FBD<25>	NO_TEST	15	RP92	RFBD<25>	22C5	57D3
57D3	20F8	FBD<26>	NO_TEST	15	RP92	RFBD<26>	22B5	57D3
57D3	20F8	FBD<27>	NO_TEST	15	RP92	RFBD<27>	22B5	57D3
57D3	20F8	FBD<28>		15	RP17	RFBD<28>	22B5	57D3
57D3	20F8	FBD<29>	NO_TEST	15	RP17	RFBD<29>	22B5	57D3
57D3	20F8	FBD<30>	NO_TEST	15	RP17	RFBD<30>	22B5	57D3
57D3	20F8	FBD<31>	NO_TEST	15	RP17	RFBD<31>	22B5	57D3
57C3	20G5	FBD<64>		15	RP10	RFBD<64>	23C5	57C3
57C3	20G5	FBD<65>	NO_TEST	15	RP10	RFBD<65>	23C5	57C3
57C3	20G5	FBD<66>	NO_TEST	15	RP10	RFBD<66>	23C5	57C3
57C3	20G5	FBD<67>	NO_TEST	15	RP10	RFBD<67>	23C5	57C3
57C3	20G5	FBD<68>		15	RP14	RFBD<68>	23C5	57C3
57C3	20G5	FBD<69>	NO_TEST	15	RP14	RFBD<69>	23C5	57C3
57C3	20G5	FBD<70>	NO_TEST	15	RP14	RFBD<70>	23C5	57C3
57C3	20G5	FBD<71>	NO_TEST	15	RP14	RFBD<71>	23C5	57C3
57C3	20G5	FBD<72>	NO_TEST	15	RP82	RFBD<72>	23C5	57C3
57C3	20G5	FBD<73>	NO_TEST	15	RP82	RFBD<73>	23C5	57C3
57C3	20G5	FBD<74>	NO_TEST	15	RP82	RFBD<74>	23C5	57C3
57C3	20G5	FBD<75>		15	RP82	RFBD<75>	23C5	57C3
57C3	20G5	FBD<76>		15	RP12	RFBD<76>	23C5	57C3
57C3	20G5	FBD<77>	NO_TEST	15	RP12	RFBD<77>	23C5	57C3
57C3	20G5	FBD<78>	NO_TEST	15	RP12	RFBD<78>	23C5	57C3
57C3	20G5	FBD<79>	NO_TEST	15	RP12	RFBD<79>	23C5	57C3
57C3	20G5	FBD<80>		15	RP11	RFBD<80>	23C5	57C3
57C3	20G5	FBD<81>	NO_TEST	15	RP11	RFBD<81>	23C5	57C3
57C3	20G5	FBD<82>	NO_TEST	15	RP11	RFBD<82>	23C5	57C3
57C3	20G5	FBD<83>	NO_TEST	15	RP11	RFBD<83>	23C5	57C3
57C3	20G5	FBD<84>		15	RP00	RFBD<84>	23C5	57C3
57C3	20G5	FBD<85>	NO_TEST	15	RP00	RFBD<85>	23C5	57C3
57C3	20G5	FBD<86>	NO_TEST	15	RP00	RFBD<86>	23C5	57C3
57C3	20G5	FBD<87>	NO_TEST	15	RP00	RFBD<87>	23C5	57C3
57C3	20G5	FBD<88>	NO_TEST	15	RP81	RFBD<88>	23C5	57C3
57C3	20F5	FBD<89>		15	RP81	RFBD<89>	23C5	57C3
57C3	20F5	FBD<90>	NO_TEST	15	RP81	RFBD<90>	23B5	57C3
57C3	20F5	FBD<91>	NO_TEST	15	RP81	RFBD<91>	23B5	57C3
57C3	20F5	FBD<92>	NO_TEST	15	RP13	RFBD<92>	23B5	57C3
57C3	20F5	FBD<93>	NO_TEST	15	RP13	RFBD<93>	23B5	57C3
57C3	20F5	FBD<94>	NO_TEST	15	RP13	RFBD<94>	23B5	57C3
57C3	20F5	FBD<95>		15	RP13	RFBD<95>	23B5	57C3
57D3	20F8	FBD<32>		15	RP29	RFBD<32>	22C1	57D3
57D3	20F8	FBD<33>	NO_TEST	15	RP29	RFBD<33>	22C1	57D3
57D3	20F8	FBD<34>	NO_TEST	15	RP29	RFBD<34>	22C1	57D3
57D3	20F8	FBD<35>	NO_TEST	15	RP29	RFBD<35>	22C1	57D3
57D3	20F8	FBD<36>		15	RP27	RFBD<36>	22C1	57D3
57D3	20F8	FBD<37>	NO_TEST	15	RP27	RFBD<37>	22C1	57D3
57D3	20F8	FBD<38>	NO_TEST	15	RP27	RFBD<38>	22C1	57D3
57D3	20F8	FBD<39>	NO_TEST	15	RP27	RFBD<39>	22C1	57D3
57D3	20F8	FBD<40>		15	RP28	RFBD<40>	22C1	57D3
57D3	20F8	FBD<41>		15	RP28	RFBD<41>	22C1	57D3
57D3	20F8	FBD<42>	NO_TEST	15	RP28	RFBD<42>	22C1	57D3
57D3	20F8	FBD<43>	NO_TEST	15	RP28	RFBD<43>	22C1	57D3
57D3	20F8	FBD<44>		15	RP97	RFBD<44>	22C1	57D3
57D3	20E8	FBD<45>	NO_TEST	15	RP97	RFBD<45>	22C1	57D3
57D3	20E8	FBD<46>	NO_TEST	15	RP97	RFBD<46>	22C1	57D3
57D3	20E8	FBD<47>	NO_TEST	15	RP97	RFBD<47>	22C1	57D3
57D3	20E8	FBD<48>		15	RP25	RFBD<48>	22C1	57D3
57D3	20E8	FBD<49>	NO_TEST	15	RP25	RFBD<49>	22C1	57D3
57D3	20E8	FBD<50>	NO_TEST	15	RP25	RFBD<50>	22C1	57D3
57D3	20E8	FBD<51>	NO_TEST	15	RP25	RFBD<51>	22C1	57D3
57D3	20E8	FBD<52>	NO_TEST	15	RP96	RFBD<52>	22C1	57D3
57D3	20E8	FBD<53>		15	RP96	RFBD<53>	22C1	57D3
57D3	20E8	FBD<54>	NO_TEST	15	RP96	RFBD<54>	22C1	57D3
57D3	20E8	FBD<55>	NO_TEST	15	RP96	RFBD<55>	22C1	57D3
57D3	20E8	FBD<56>		15	RP26	RFBD<56>	22C1	57D3
57D3	20E8	FBD<57>	NO_TEST	15	RP26	RFBD<57>	22C1	57D3
57D3	20E8	FBD<58>	NO_TEST	15	RP26	RFBD<58>	22B1	57D3
57D3	20E8	FBD<59>	NO_TEST	15	RP26	RFBD<59>	22B1	57D3
57D3	20E8	FBD<60>		15	RP24	RFBD<60>	22B1	57D3
57D3	20E8	FBD<61>	NO_TEST	15	RP24	RFBD<61>	22B1	57D3
57D3	20E8	FBD<62>	NO_TEST	15	RP24	RFBD<62>	22B1	57D3
57D3	20E8	FBD<63>	NO_TEST	15	RP24	RFBD<63>	22B1	57D3
57C3	20F5	FBD<96>		15	RP88	RFBD<96>	23C1	57C3
57C3	20F5	FBD<97>	NO_TEST	15	RP88	RFBD<97>	23C1	57C3
57C3	20F5	FBD<98>	NO_TEST	15	RP88	RFBD<98>	23C1	57C3
57C3	20F5	FBD<99>	NO_TEST	15	RP88	RFBD<99>	23C1	57C3
57C3	20F5	FBD<100>	NO_TEST	15	RP89	RFBD<100>	23C1	57C3
57C3	20F5	FBD<101>		15	RP89	RFBD<101>	23C1	57C3
57C3	20F5	FBD<102>	NO_TEST	15	RP89	RFBD<102>	23C1	57C3
57C3	20F5	FBD<103>	NO_TEST	15	RP89	RFBD<103>	23C1	57C3
57C3	20F5	FBD<104>		15	RP4	RFBD<104>	23C1	57C3
57C3	20F5	FBD<105>	NO_TEST	15	RP4	RFBD<105>	23C1	57C3
57C3	20F5	FBD<106>	NO_TEST	15	RP4	RFBD<106>	23C1	57C3
57C3	20F5	FBD<107>	NO_TEST	15	RP4	RFBD<107>	23C1	57C3
57C3	20F5	FBD<108>		15	RP86	RFBD<108>	23C1	57C3
57C3	20E5	FBD<109>	NO_TEST	15	RP86	RFBD<109>	23C1	57C3
57C3	20E5	FBD<110>	NO_TEST	15	RP86	RFBD<110>	23C1	57C3
57C3	20E5	FBD<111>	NO_TEST	15	RP86	RFBD<111>	23C1	57C3
57C3	20E5	FBD<112>		15	RP5	RFBD<112>	23C1	57C3
57C3	20E5	FBD<113>	NO_TEST	15	RP5	RFBD<113>	23C1	57C3
57C3	20E5	FBD<114>	NO_TEST	15	RP5	RFBD<114>	23C1	57C3
57C3	20E5	FBD<115>	NO_TEST	15	RP5	RFBD<115>	23C1	57C3
57C3	20E5	FBD<116>		15	RP6	RFBD<116>	23C1	57C3
57C3	20E5	FBD<117>	NO_TEST	15	RP6	RFBD<117>	23C1	57C3
57C3	20E5	FBD<118>	NO_TEST	15	RP6	RFBD<118>	23C1	57C3
57C3	20E5	FBD<119>	NO_TEST	15	RP6	RFBD<119>	23C1	57C3
57C3	20E5	FBD<120>		15	RP7	RFBD<120>	23C1	57C3
57C3	20E5	FBD<121>	NO_TEST	15	RP7	RFBD<121>	23C1	57C3
57C3	20E5	FBD<122>	NO_TEST	15	RP7	RFBD<122>	23B1	57C3
57C3	20E5	FBD<123>	NO_TEST	15	RP7	RFBD<123>	23B1	57C3
57C3	20E5	FBD<124>		15	RP87	RFBD<124>	23B1	57C3
57C3	20E5	FBD<125>	NO_TEST	15	RP87	RFBD<125>	23B1	57C3
57C3	20E5	FBD<126>	NO_TEST	15	RP87	RFBD<126>	23B1	57C3
57C3	20E5	FBD<127>	NO_TEST	15	RP87	RFBD<127>	23B1	57C3

PLACE R'S CLOSE TO GPU

57C3	20D7	FBACLK1	R123	15	1% 1/16W MF 402	RFBACLK1	22C2	57C3
			R158	100	1% 1/16W MF 402	PLACE 100OHM TERM AT RAM		
57C3	20D7	FBACLK1_L	R132	15	1% 1/16W MF 402	RFBACLK1_L	22C2	57C3
57C3	20D7	FBACLK0	R148	15	1% 1/16W MF 402	RFBACLK0	22C6	57C3
			R500	100	1% 1/16W MF 402	PLACE 100OHM TERM AT RAM		
57C3	20D7	FBACLK0_L	R156	15	1% 1/16W MF 402	RFBACLK0_L	22C6	57C3
57B3	20C5	FBBCLK1	R106	15	1% 1/16W MF 402	RFBBCLK1	23C2	57B3
			R20	100	1% 1/16W MF 402	PLACE 100OHM TERM AT RAM		
57B3	20C5	FBBCLK1_L	R105	15	1% 1/16W MF 402	RFBBCLK1_L	23C2	57B3
57B3	20C5	FBBCLK0	R103	15	1% 1/16W MF 402	RFBBCLK0	23C6	57B3
			R403	100	1% 1/16W MF 402	PLACE 100OHM TERM AT RAM		
57B3	20C5	FBBCLK0_L	R104	15	1% 1/16W MF 402	RFBBCLK0_L	23C6	57B3

PLACE THESE R CLOSE TO GPU

PLACE THESE R CLOSE TO SGRAM

57C3	20C7	FBDQS<0>	57C3	R122	0	FBDQSTERM<0>	RFBDQS<0>	22C6	57C3
57C3	20C7	FBDQS<1>	R101	0	57C3	FBDQSTERM<1>	R509	15	RFBDQS<1>	22C6	57C3
57C3	20C7	FBDQS<2>	57C3	R97	0	FBDQSTERM<2>	R479	15	RFBDQS<2>	22C6	57C3
57C3	20C7	FBDQS<3>	R81	0	57C3	FBDQSTERM<3>	R506	15	RFBDQS<3>	22C6	57C3
57C3	20C7	FBDQS<4>	57C3	R167	0	FBDQSTERM<4>	R187	15	RFBDQS<4>	22C2	57C3
57C3	20C7	FBDQS<5>	R159	0	57C3	FBDQSTERM<5>	R146	15	RFBDQS<5>	22C2	57C3
57C3	20C7	FBDQS<6>	57C3	R147	0	FBDQSTERM<6>	R186	15	RFBDQS<6>	22C2	57C3
57C3	20C7	FBDQS<7>	R140	0	57C3	FBDQSTERM<7>	R153	15	RFBDQS<7>	22C2	57C3

PLACE THESE R CLOSE TO GPU

PLACE THESE R CLOSE TO SGRAM

57B3	20D4	FBDQS<8>	57B3	R63	0	FBDQSTERM<8>	R428	15	RFBDQS<8>	23C6	57B3
57B3	20D4	FBDQS<9>	R65	0	57B3	FBDQSTERM<9>	R415	15	RFBDQS<9>	23C6	57B3
57B3	20D4	FBDQS<10>	57B3	R69	0	FBDQSTERM<10>	R416	15	RFBDQS<10>	23C6	57B3
57B3	20D4	FBDQS<11>	R68	0	57B3	FBDQSTERM<11>	R429	15	RFBDQS<11>	23C6	57B3
57B3	20D4	FBDQS<12>	57B3	R53	0	FBDQSTERM<12>	R31	15	RFBDQS<12>	23C2	57B3
57B3	20D4	FBDQS<13>	R55	0	57B3	FBDQSTERM<13>	R25	15	RFBDQS<13>	23C2	57B3
57B3	20D4	FBDQS<14>	57B3	R57	0	FBDQSTERM<14>	R24	15	RFBDQS<14>	23C2	57B3
57B3	20D4	FBDQS<15>	R60	0	57B3	FBDQSTERM<15>	R32	15	RFBDQS<15>	23C2	57B3

FB TERMINATION

NOTICE OF PROPRIETARY PROPERTY

LAST_MODIFIED=Wed May 28 20:23:25 2003
THE INFORMATION CONTAINED HEREIN IS THE PROPRIETARY PROPERTY OF APPLE COMPUTER, INC. THE POSSESSOR AGREES TO THE FOLLOWING

I TO MAINTAIN THE DOCUMENT IN CONFIDENCE
II NOT TO REPRODUCE OR COPY IT
III NOT TO REVEAL OR PUBLISH IN WHOLE OR PART

APPLE COMPUTER INC.

SIZE	DRAWING NUMBER	REV.
D	051-6490	A

SCALE	SHT	OF
NONE	21	74

DRAWING

CR-22

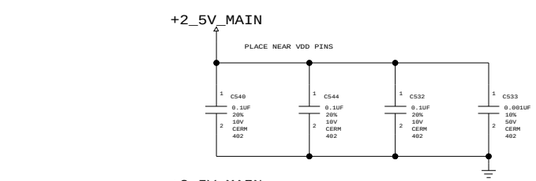

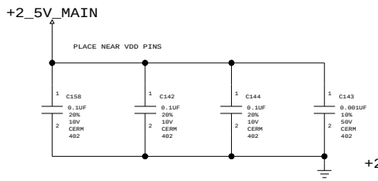

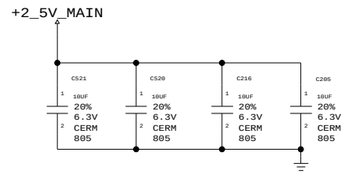

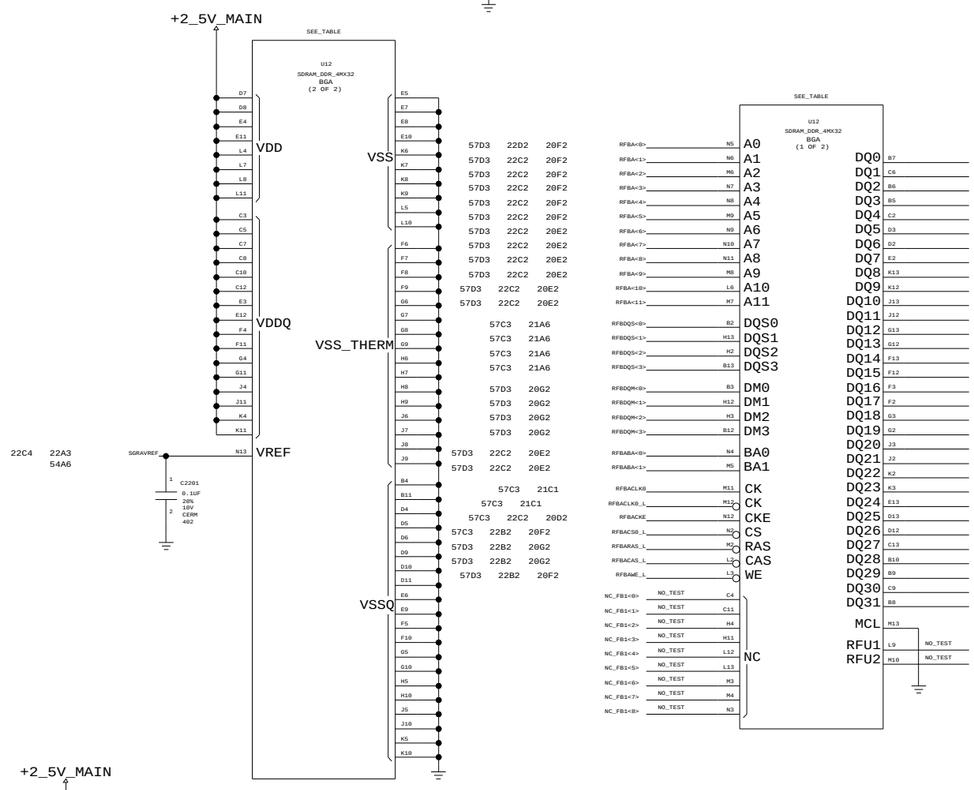

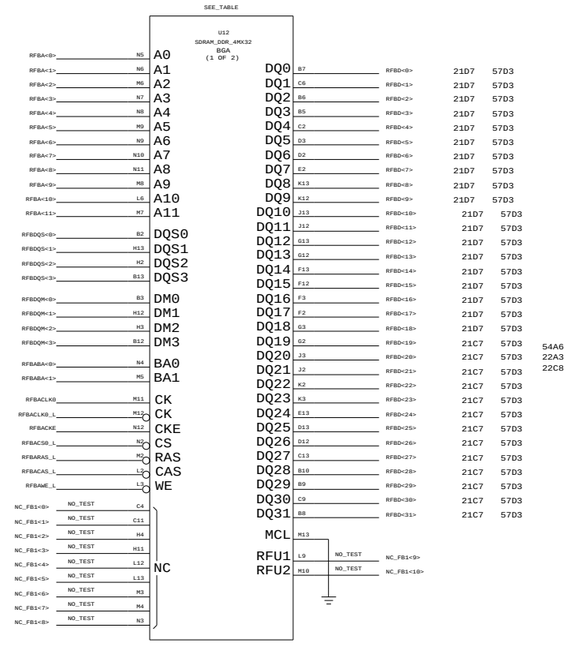

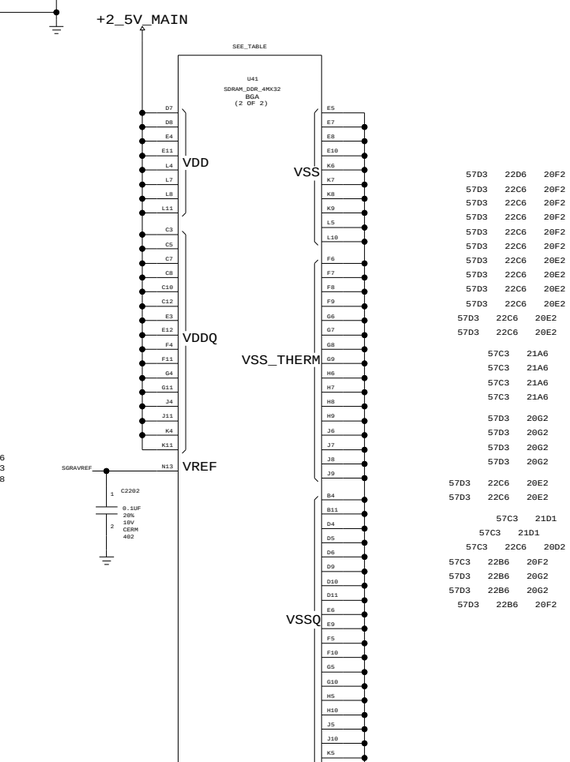

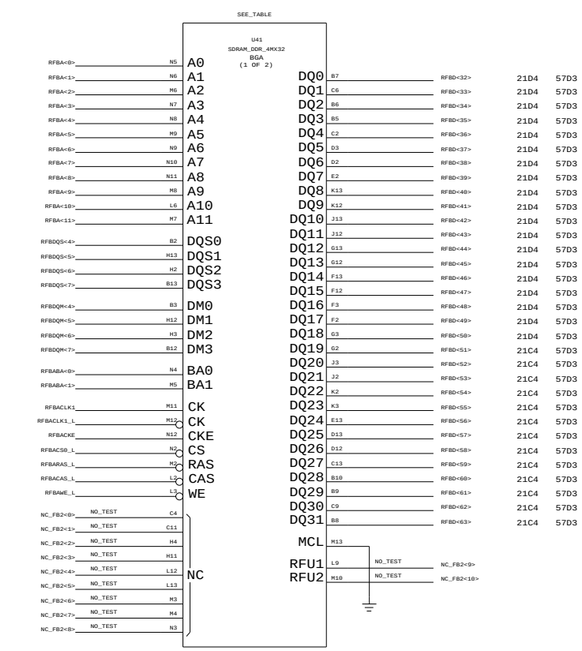

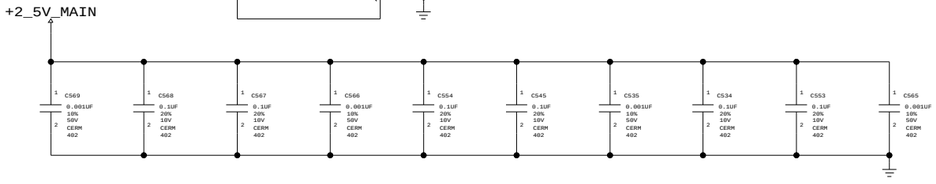

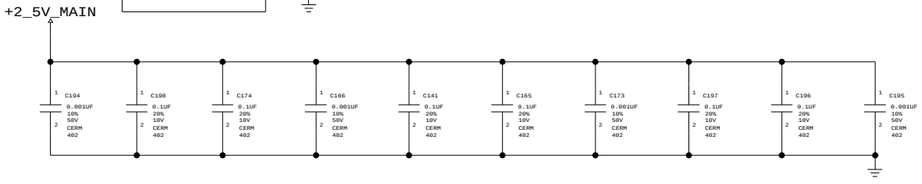

SGRAM0 & SGRAM1 MEMORY SUPPORT

PART NUMBER	QTY	DESCRIPTION	REFERENCE DES	CRITICAL	BOM OPTION
333S0249	2	SDRAM,4MX32,DDR,275MHZ	U12,U41	CRITICAL	275_SAMSUNG
333S0250	2	SDRAM,4MX32,DDR,275MHZ	U12,U41	CRITICAL	275_HYNIX

SGRAM0 & SGRAM1 DDR MEMORY REFERENCE SUPPORT

PART NUMBER	QTY	DESCRIPTION	REFERENCE DES	CRITICAL	BOM OPTION
116S1103	1	RES,1K-OHM,5%,1/16W,0402	R152		MEMREFG_ACT
116S1000	1	RES,0-OHM,5%,1/16W,0402	R152		MEMREFG_PAS

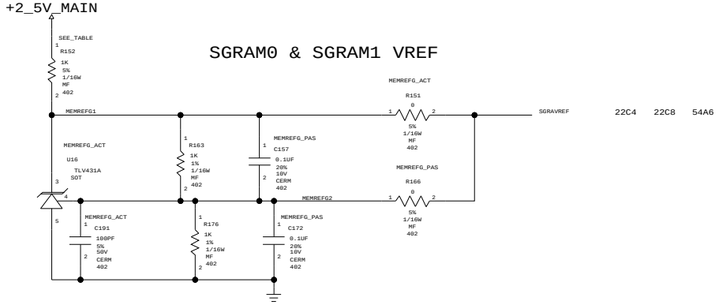

SGRAM0 & SGRAM1 VREF

SGRAM0 & SGRAM1

NOTICE OF PROPRIETARY PROPERTY

LAST_MODIFIED=Wed May 28 20:23:27 2003
THE INFORMATION CONTAINED HEREIN IS THE PROPRIETARY PROPERTY OF APPLE COMPUTER, INC. THE POSSESSOR AGREES TO THE FOLLOWING

I TO MAINTAIN THE DOCUMENT IN CONFIDENCE

II NOT TO REPRODUCE OR COPY IT

III NOT TO REVEAL OR PUBLISH IN WHOLE OR PART

APPLE COMPUTER INC.

SIZE	DRAWING NUMBER	REV.
D	051-6490	A
SCALE: NONE	SHT 22 OF 74	

DRAWING

CR-23

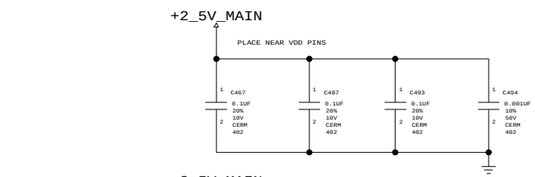

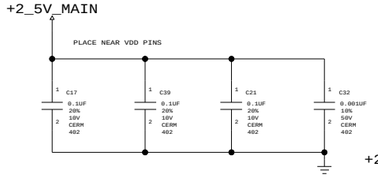

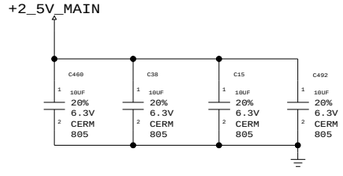

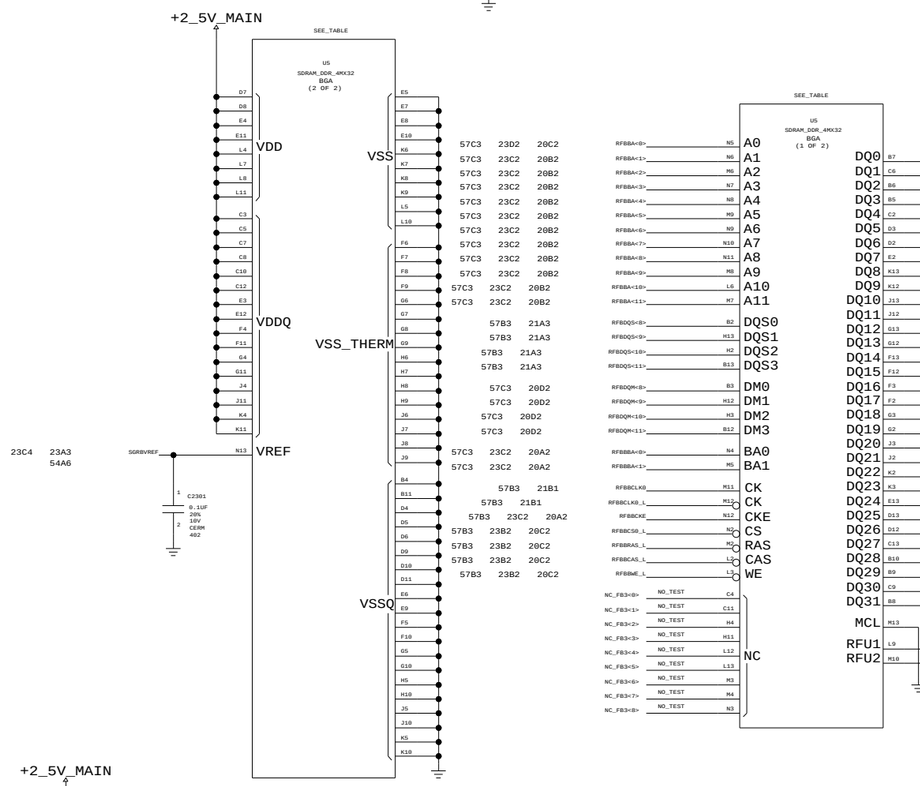

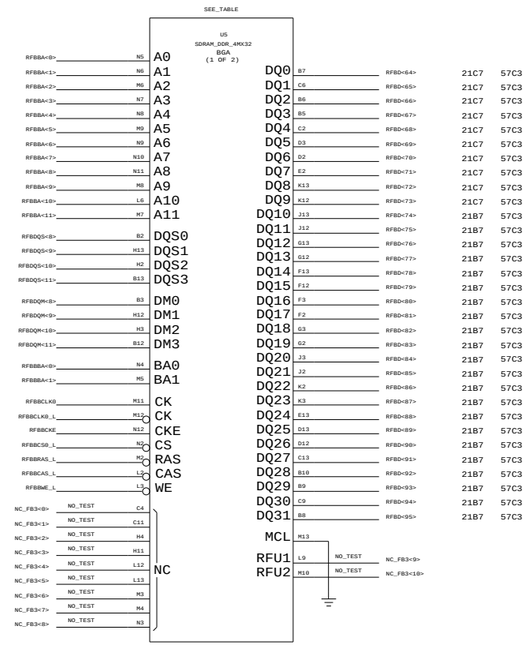

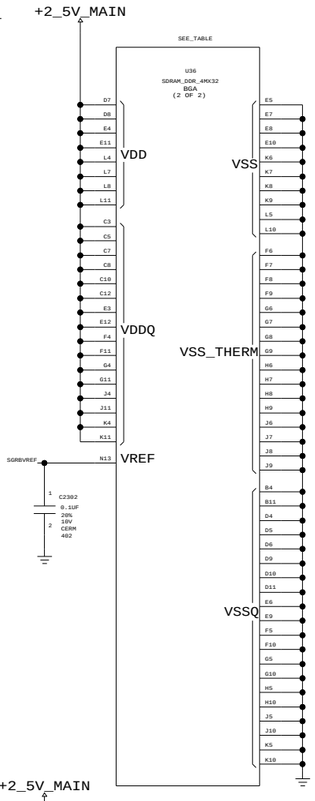

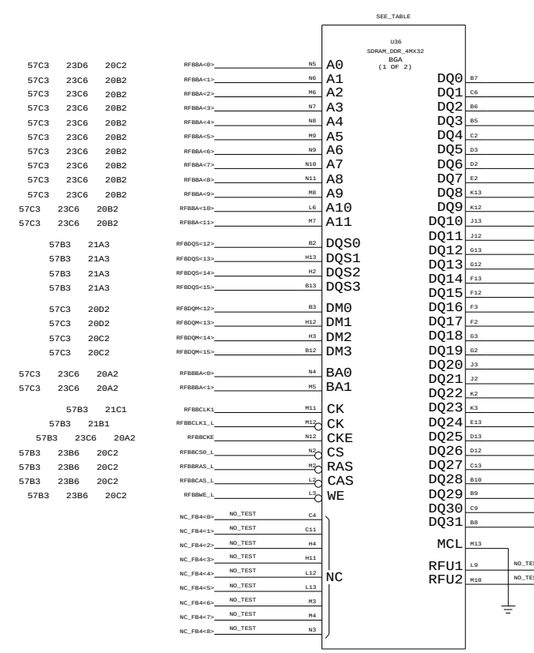

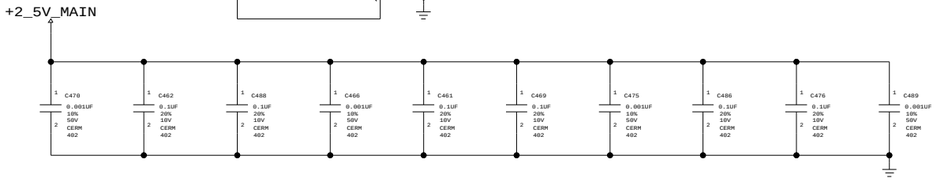

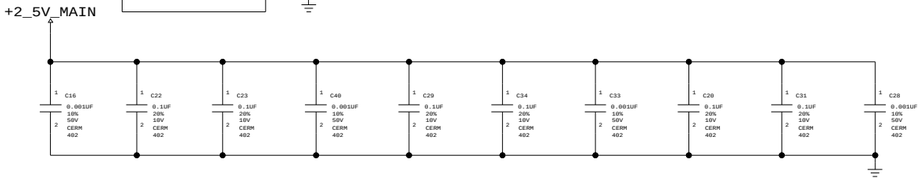

SGRAM0 & SGRAM1 MEMORY SUPPORT

PART NUMBER	QTY	DESCRIPTION	REFERENCE DES	CRITICAL	BOM OPTION
333S0249	2	SDRAM,4MX32,DDR,275MHZ	U5,U36	CRITICAL	275_SAMSUNG
333S0250	2	SDRAM,4MX32,DDR,275MHZ	U5,U36	CRITICAL	275_HYNIX

SGRAM2 & SGRAM3 VREF

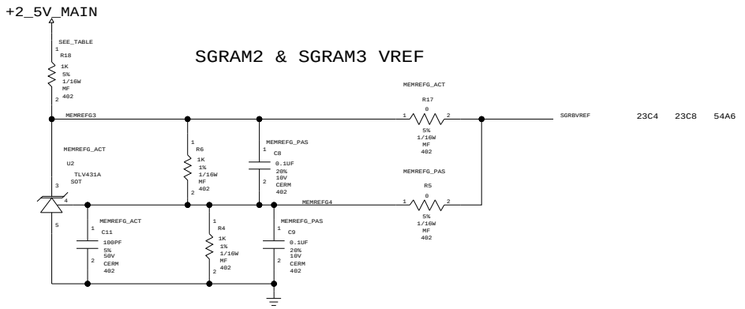

SGRAM2 & SGRAM3 DDR MEMORY REFERENCE SUPPORT

PART NUMBER	QTY	DESCRIPTION	REFERENCE DES	CRITICAL	BOM OPTION
116S1103	1	RES,1K-OHM,5%,1/16W,0402	R18		MEMREFG_ACT
116S1000	1	RES,0-OHM,5%,1/16W,0402	R18		MEMREFG_PAS

SGRAM2 & SGRAM3

NOTICE OF PROPRIETARY PROPERTY

LAST_MODIFIED=Wed May 28 20:23:29 2003
THE INFORMATION CONTAINED HEREIN IS THE PROPRIETARY PROPERTY OF APPLE COMPUTER, INC. THE POSSESSOR AGREES TO THE FOLLOWING

I TO MAINTAIN THE DOCUMENT IN CONFIDENCE

II NOT TO REPRODUCE OR COPY IT

III NOT TO REVEAL OR PUBLISH IN WHOLE OR PART

APPLE COMPUTER INC.

SIZE	DRAWING NUMBER	REV.
D	051-6490	A
SCALE: NONE	SHT 23 OF 74	

DRAWING

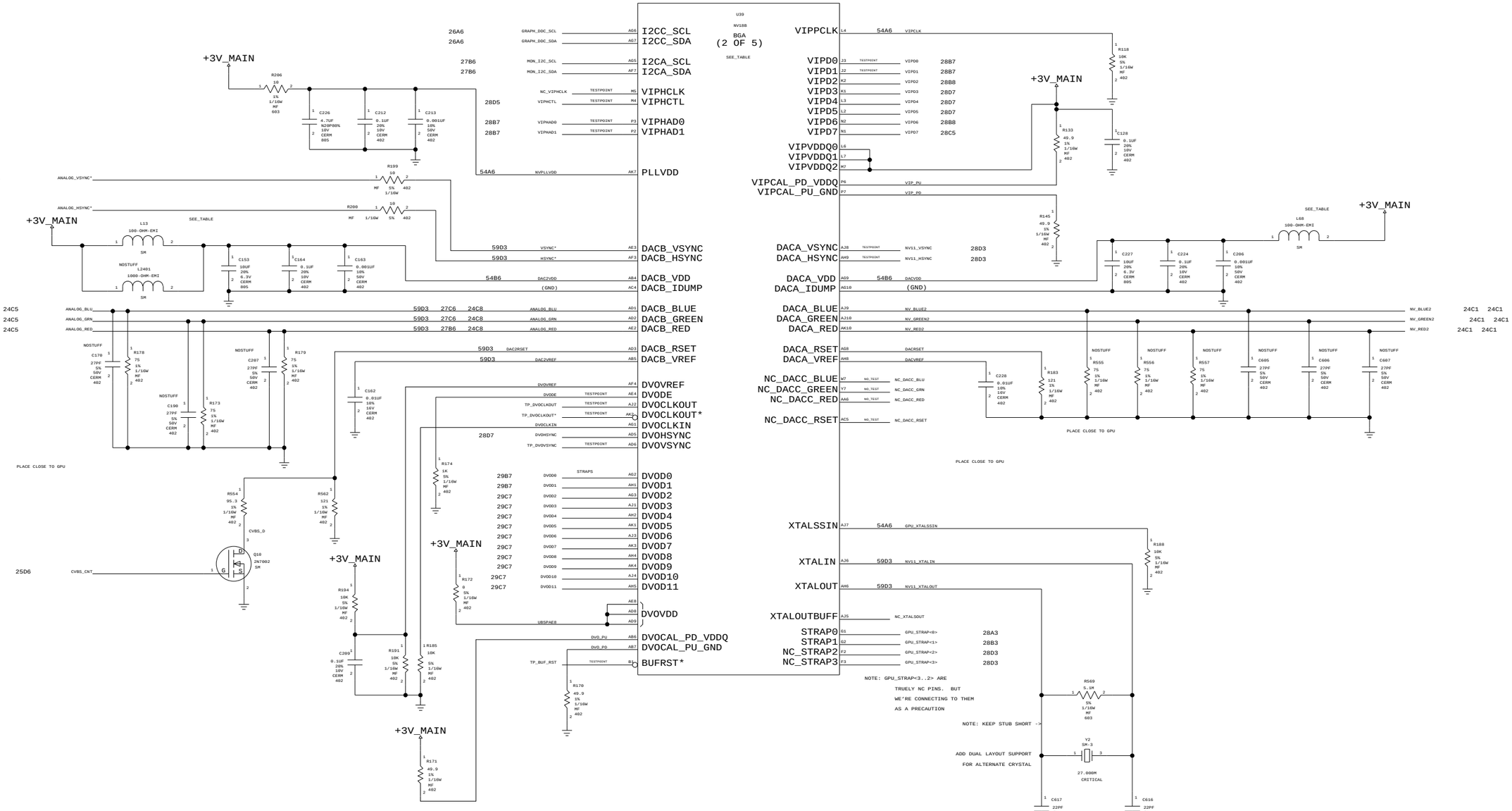

NVIDIA ASIC SUPPORT

PART NUMBER	QTY	DESCRIPTION	REFERENCE DES	CRITICAL	BOM OPTION
338S0119	1	IC,NV18B,GRPHCS CTLR,A03	U39		NV18B
338S0112	1	IC,NV31,GRPHCS CTLR	U39		NV31
338S0113	1	IC,NV34,GRPHCS CTLR	U39		NV34
155S0141	1	FLTR,EMI,600 OHMS,.2A,0603	L2401		NOSTUFF
155S0143	2	FLTR,EMI,1000 OHMS,.2A,0805	L13,L68		

DAC & CLOCKS

NOTICE OF PROPRIETARY PROPERTY

LAST MODIFIED=Wed May 28 20:23:30 2003
THE INFORMATION CONTAINED HEREIN IS THE PROPRIETARY PROPERTY OF APPLE COMPUTER, INC. THE POSSESSOR AGREES TO THE FOLLOWING

I TO MAINTAIN THE DOCUMENT IN CONFIDENCE
II NOT TO REPRODUCE OR COPY IT
III NOT TO REVEAL OR PUBLISH IN WHOLE OR PART

APPLE COMPUTER INC.

SIZE	DRAWING NUMBER	REV.
D	051-6490	A
SCALE: NONE	SHT 24 OF 74	

DRAWING

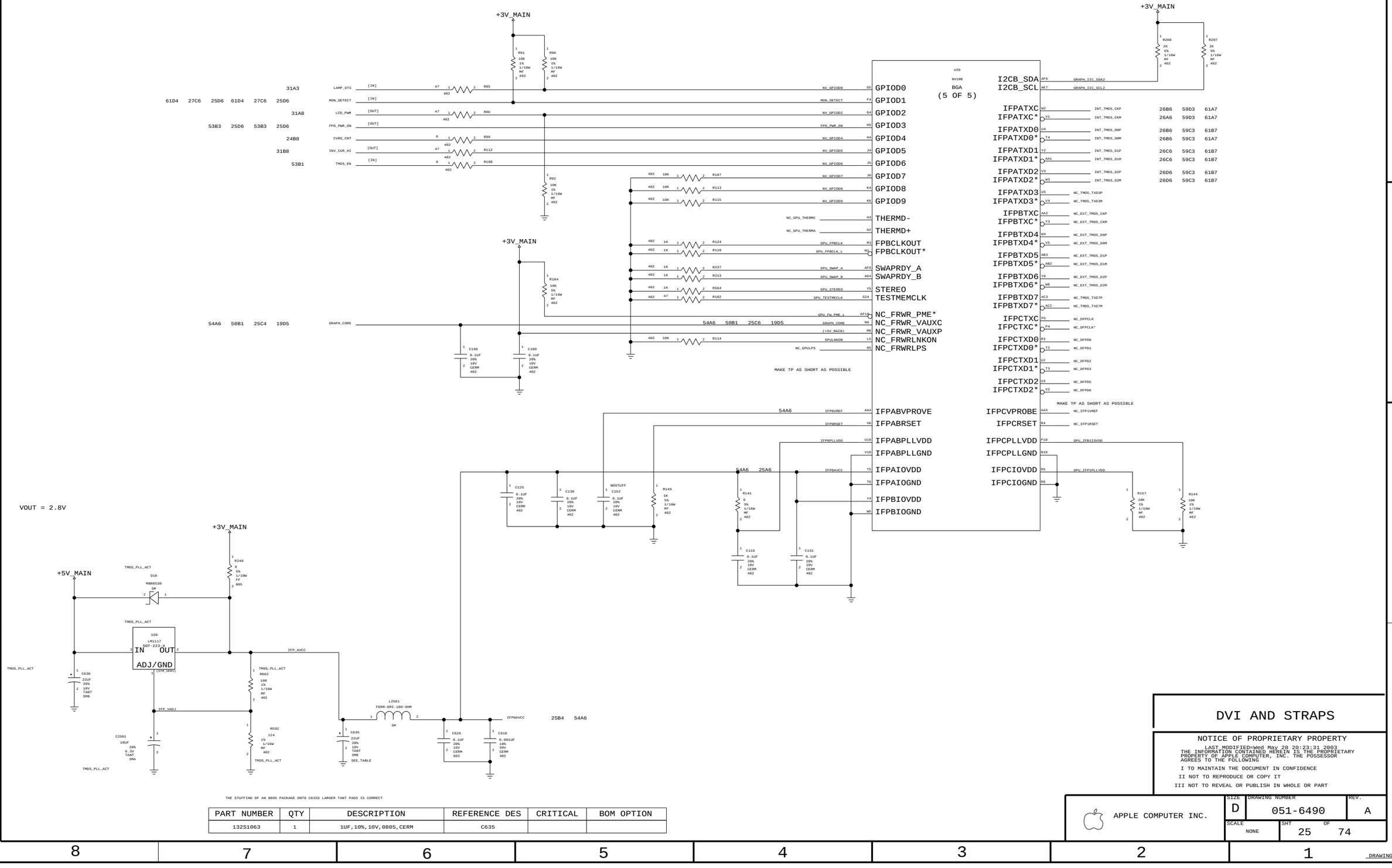

PART NUMBER	QTY	DESCRIPTION	REFERENCE DES	CRITICAL	BOM OPTION
132S1063	1	1UF,10%,10V,0805,CERM	C635		

DVI AND STRAPS

NOTICE OF PROPRIETARY PROPERTY
LAST_MODIFIED=Wed May 28 20:23:31 2003
THE INFORMATION CONTAINED HEREIN IS THE PROPRIETARY PROPERTY OF APPLE COMPUTER, INC. THE POSSESSOR AGREES TO THE FOLLOWING
I TO MAINTAIN THE DOCUMENT IN CONFIDENCE
II NOT TO REPRODUCE OR COPY IT
III NOT TO REVEAL OR PUBLISH IN WHOLE OR PART

APPLE COMPUTER INC.

SIZE	DRAWING NUMBER	REV.
D	051-6490	A
SCALE: NONE	SHT 25 OF 74	

DRAWING

CR-26

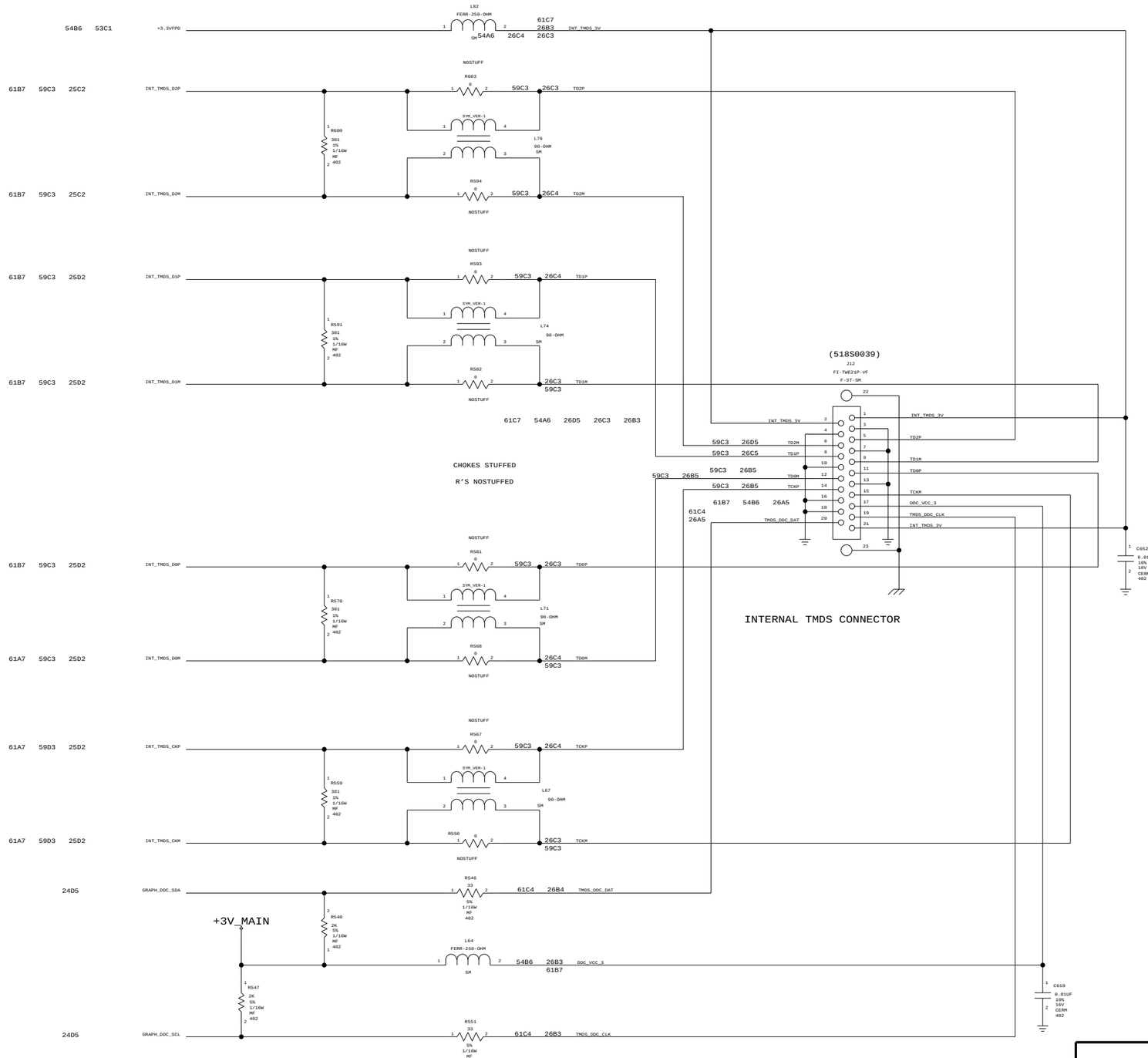

TMDS

NOTICE OF PROPRIETARY PROPERTY

LAST MODIFIED=Wed May 28 20:23:32 2003
THE INFORMATION CONTAINED HEREIN IS THE PROPRIETARY PROPERTY OF APPLE COMPUTER, INC. THE POSSESSOR AGREES TO THE FOLLOWING

I TO MAINTAIN THE DOCUMENT IN CONFIDENCE

II NOT TO REPRODUCE OR COPY IT

III NOT TO REVEAL OR PUBLISH IN WHOLE OR PART

APPLE COMPUTER INC.

SIZE	DRAWING NUMBER	REV.
D	051-6490	A
SCALE	SHT	OF
NONE	26	74

DRAWING

CR-27

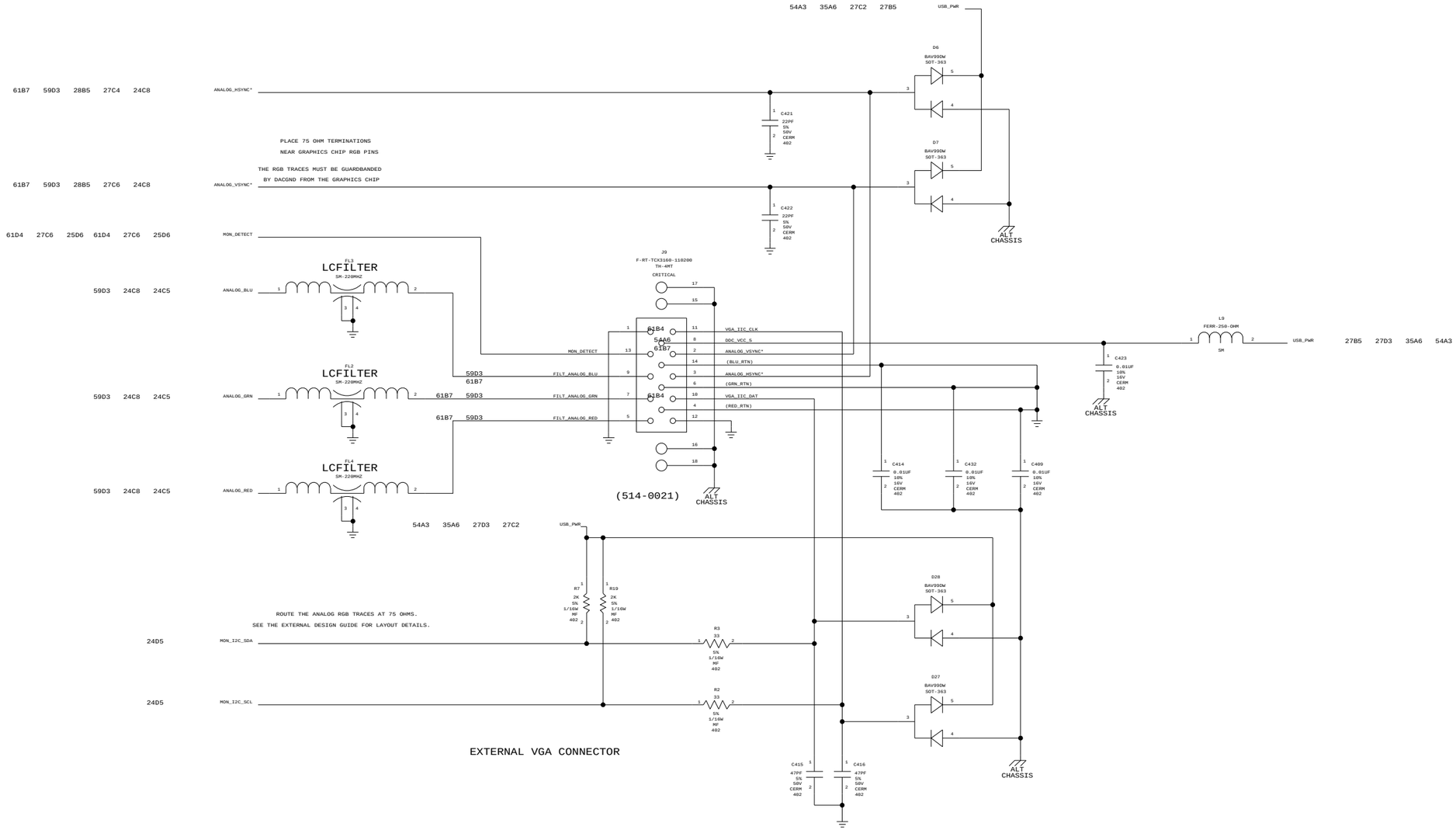

EXTERNAL VGA CONNECTOR

EXTERNAL VGA

NOTICE OF PROPRIETARY PROPERTY

LAST MODIFIED=Wed May 28 20:23:33 2003
THE INFORMATION CONTAINED HEREIN IS THE PROPRIETARY PROPERTY OF APPLE COMPUTER, INC. THE POSSESSOR AGREES TO THE FOLLOWING

I TO MAINTAIN THE DOCUMENT IN CONFIDENCE

II NOT TO REPRODUCE OR COPY IT

III NOT TO REVEAL OR PUBLISH IN WHOLE OR PART

APPLE COMPUTER INC.

SIZE	DRAWING NUMBER	REV.
D	051-6490	A
SCALE: NONE	SHT 27 OF 74	

DRAWING

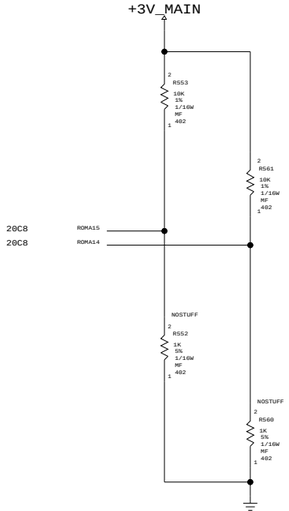

(1) ROM TYPE (OVERRIDDEN IF STRAP1 = 0)
[1..0] = [ROMA15,ROMA14]
00 = PARALLEL
01 = SERIAL AT25F
10 = SERIAL SST45VF
* 11 = SERIAL FUTURE

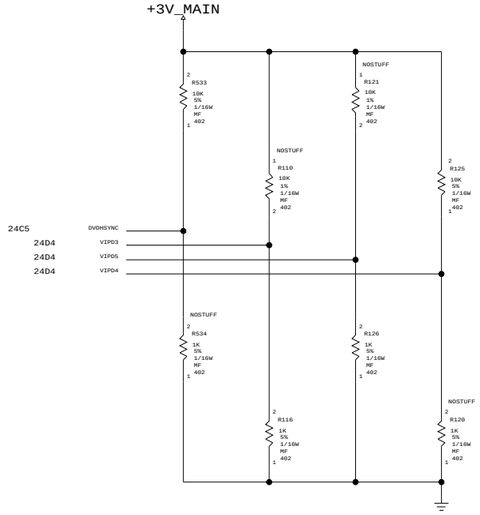

(3) PCI DEVICE ID
[3..0] = [DVOHSYNC,VIPD3,VIPD5,VIPD4]
0010 = 0X112 GEFORCE2 GO
0011 = 0X113 QUADRO2 GO
0100 = 0X114 NV17M
0000 = 0X110 GEFORCE2GO MX (NV11B)
* 1001 = NV18B,NV31,NV34

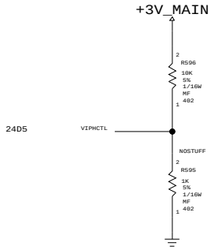

(5) HOST MODE
[0] = [VIPHCTL]
0 = PCI MODE
* 1 = AGP MODE

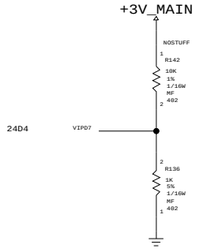

(6) AGP SIDEBAND
[0] = [VIPD7]
* 0 = ENABLE AGP SIDEBAND
1 = DISABLE AGP SIDEBAND

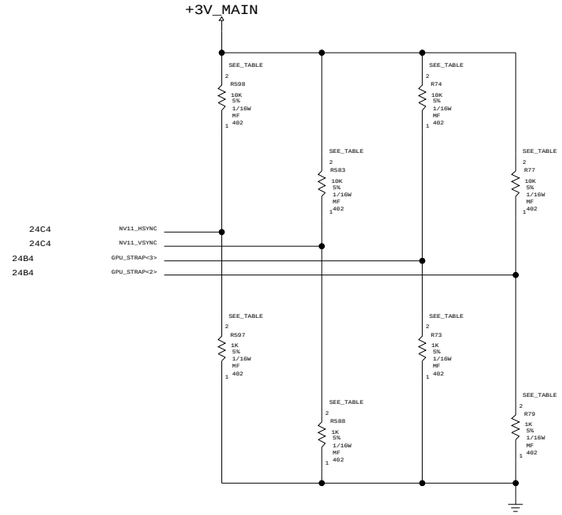

(8) FRAME BUFFER MEMORY TYPE
[3..0] = [NV11_HSYNC,NV11_VSYNC,GPU_STRAP<3>,GPU_STRAP<2>]
1111 = 222MHZ
1101 = 275MHZ SAMSUNG
1100 = 275MHZ HYNIX

PART NUMBER	QTY	DESCRIPTION	REFERENCE DES	CRITICAL	BOM OPTION
116S1104	3	RES,10KOHM,5%,0402	R598,R583,R77		275_SAMSUNG
116S1103	1	RES,1KOHM,5%,0402	R73		275_SAMSUNG
116S1104	2	RES,10KOHM,5%,0402	R598,R583		275_HYNIX
116S1103	2	RES,1KOHM,5%,0402	R73,R79		275_HYNIX

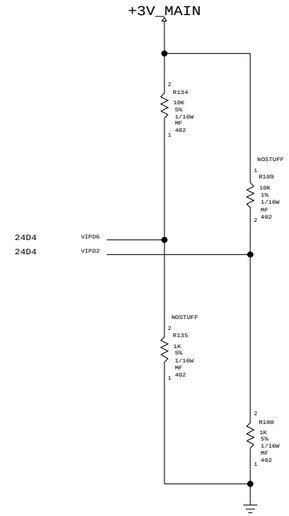

(2) CRYSTAL FREQUENCY SELECT
[1..0] = [VIPD6,VIPD2]
00 = 13.5MHZ
01 = 14.38MHZ
* 10 = 27MHZ
11 = {UNDEFINED}

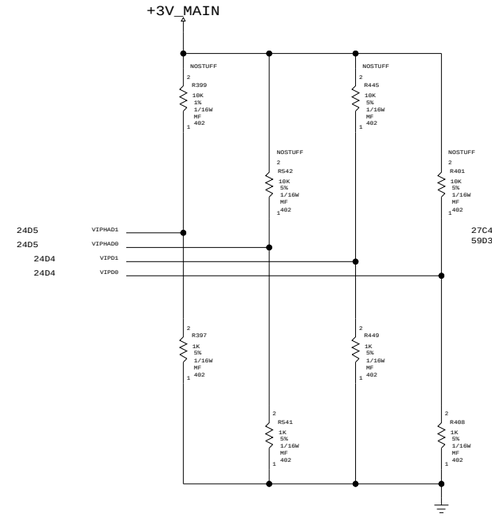

(4) USER DEFINED STRAPS
[3..0] = [VIPHAD1,VIPHAD0,VIPD1,VIPD0]

THESE BITS ARE UNDEFINED BUT THEY
MUST BE KEPT LOW DURING RESET

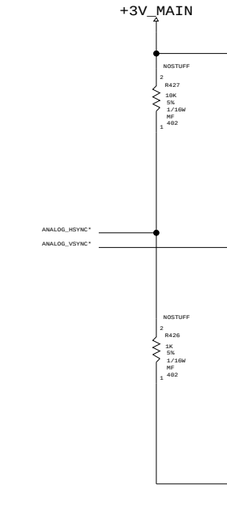

(7) TV MODE
[1..0] = [ANALOG_HSYNC*,ANALOG_VSYNC*]
00 = SECAM
01 = NTSC
10 = PAL
* 11 = DISABLED

(THESE RESISTORS ARE ALL NOSTUFF)

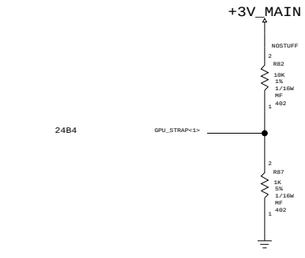

(9) SUB-VENDOR
[0] = [GPU_STRAP<1>]
0 = SYSTEM BIOS (VENDOR & SUBSYSTEM ID=0X0000)
* 1 = ADAPTER CARD VGA BIOS (VENDOR & SUBSYSTEM ID=0X54-0X57)

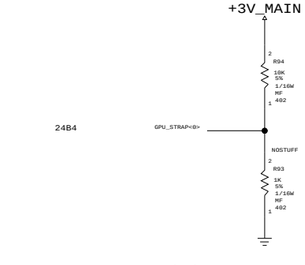

(10) PCI ADDRESS BUS
[0] = [GPU_STRAP<0>]
0 = REVERSED
* 1 = NORMAL

NVIDIA STRAPS 1

NOTICE OF PROPRIETARY PROPERTY

LAST_MODIFIED=Wed May 28 20:23:34 2003
THE INFORMATION CONTAINED HEREIN IS THE PROPRIETARY PROPERTY OF APPLE COMPUTER, INC. THE POSSESSOR AGREES TO THE FOLLOWING
I TO MAINTAIN THE DOCUMENT IN CONFIDENCE
II NOT TO REPRODUCE OR COPY IT
III NOT TO REVEAL OR PUBLISH IN WHOLE OR PART

APPLE COMPUTER INC.

SIZE	DRAWING NUMBER	REV.
D	051-6490	A
SCALE: NONE	SHT 28 OF 74	

DRAWING

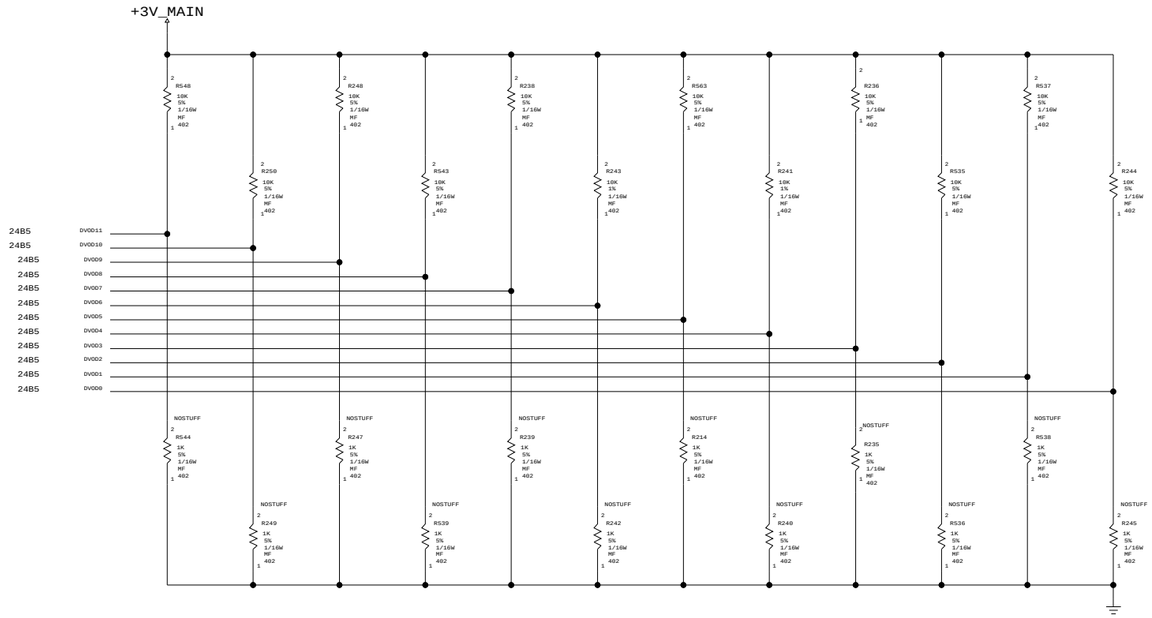

UNDEFINED RESET CONFIGURATION STRAPS

NVIDIA STRAPS 2

NOTICE OF PROPRIETARY PROPERTY

LAST_MODIFIED=Wed May 28 20:23:34 2003
THE INFORMATION CONTAINED HEREIN IS THE PROPRIETARY PROPERTY OF APPLE COMPUTER, INC. THE POSSESSOR AGREES TO THE FOLLOWING

I TO MAINTAIN THE DOCUMENT IN CONFIDENCE

II NOT TO REPRODUCE OR COPY IT

III NOT TO REVEAL OR PUBLISH IN WHOLE OR PART

APPLE COMPUTER INC.	SIZE	DRAWING NUMBER	REV.
	D	051-6490	A
	SCALE	SHT OF	
	NONE	29 74	

DRAWING

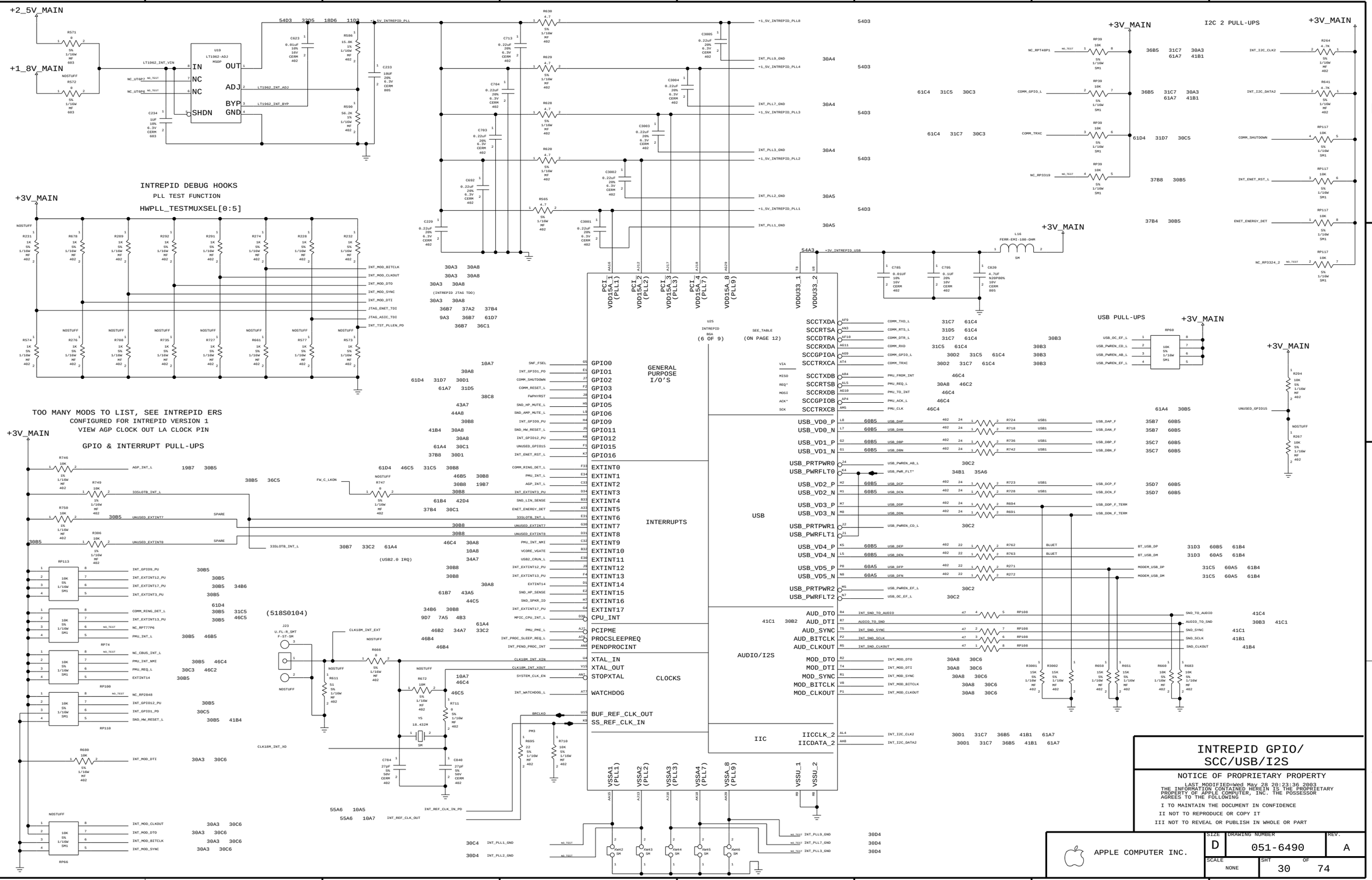
+2_5V_MAIN
+1_8V_MAIN
LT1962_INT_VIN
LT1962_INT_ADJ
LT1962_INT_BYP
+1_5V_INTREPID_PLL
INTREPID DEBUG HOOKS
PLL TEST FUNCTION
HWPLL_TESTMUXSEL[0:5]
+3V_MAIN
TOO MANY MODS TO LIST, SEE INTREPID ERS
CONFIGURED FOR INTREPID VERSION 1
VIEW AGP CLOCK OUT LA CLOCK PIN
GPIO & INTERRUPT PULL-UPS
GENERAL PURPOSE I/O'S
INTERRUPTS
CLOCKS
USB
AUDIO/I2S
IIC
I2C 2 PULL-UPS
USB PULL-UPS
GPIO0
GPIO1
GPIO2
GPIO3
GPIO4
GPIO5
GPIO6
GPIO9
GPIO11
GPIO12
GPIO15
GPIO16
EXTINT0
EXTINT1
EXTINT2
EXTINT3
EXTINT4
EXTINT5
EXTINT6
EXTINT7
EXTINT8
EXTINT9
EXTINT10
EXTINT11
EXTINT12
EXTINT13
EXTINT14
EXTINT15
EXTINT16
EXTINT17
CPU_INT
PCIPME
PROCSLEEPREQ
PENDPROCINT
XTAL_IN
XTAL_OUT
STOPXTAL
WATCHDOG
BUF_REF_CLK_OUT
SS_REF_CLK_IN
USB_VD0_P
USB_VD0_N
USB_VD1_P
USB_VD1_N
USB_VD2_P
USB_VD2_N
USB_VD3_P
USB_VD3_N
USB_VD4_P
USB_VD4_N
USB_VD5_P
USB_VD5_N
AUD_DTO
AUD_DTI
AUD_SYNC
AUD_BITCLK
AUD_CLKOUT
MOD_DTO
MOD_DTI
MOD_SYNC
MOD_BITCLK
MOD_CLKOUT
IICCLK_2
IICDATA_2
INTREPID GPIO/
SCC/USB/I2S
NOTICE OF PROPRIETARY PROPERTY
LAST MODIFIED=Wed May 28 20:23:36 2003
THE INFORMATION CONTAINED HEREIN IS THE PROPRIETARY PROPERTY OF APPLE COMPUTER, INC. THE POSSESSOR AGREES TO THE FOLLOWING
I TO MAINTAIN THE DOCUMENT IN CONFIDENCE
II NOT TO REPRODUCE OR COPY IT
III NOT TO REVEAL OR PUBLISH IN WHOLE OR PART
APPLE COMPUTER INC.
SIZE D
DRAWING NUMBER 051-6490
REV. A
SCALE NONE
SHT 30 OF 74
DRAWING

CR-31

MODEM BOARD CONNECTOR

(DASH II)

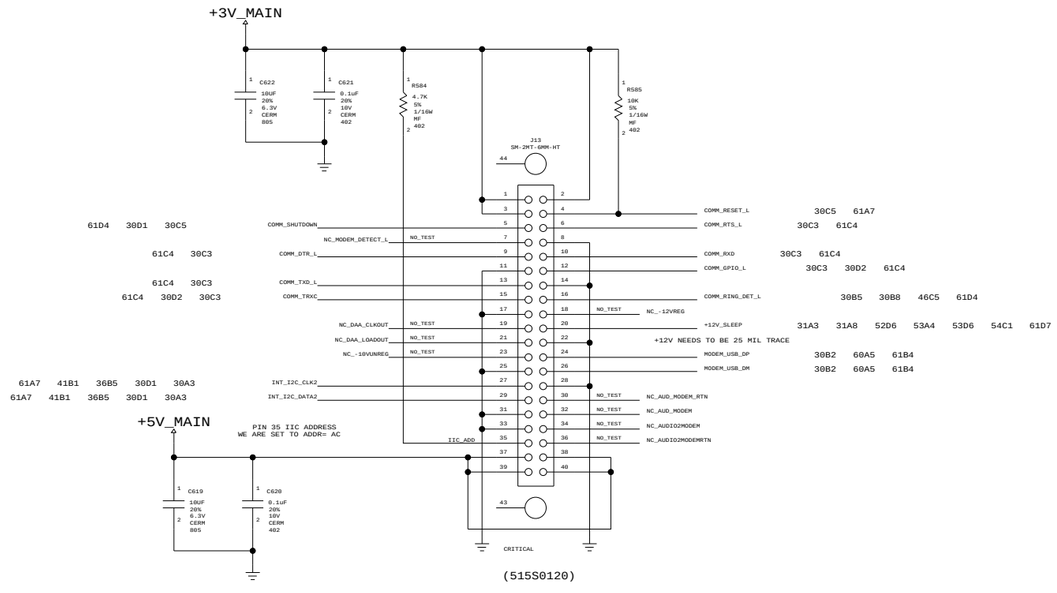

(515S0120)

MODEM STANDOFF SUPPORT

PART NUMBER	QTY	DESCRIPTION	REFERENCE DES	CRITICAL	BOM OPTION
860-1034	2	STDOFF-19709-236H-TH	BS1,BS2		

BLUETOOTH CONNECTOR

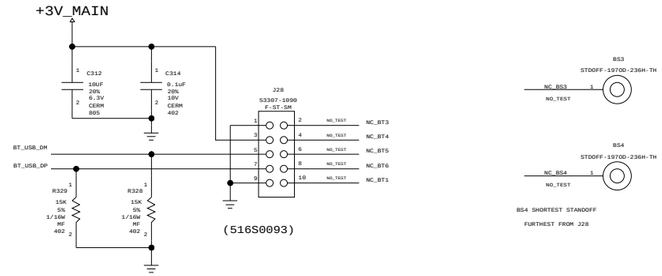

(516S0093)

BLUETOOTH CARD MOUNTING HARDWARE SUPPORT

PART NUMBER	QTY	DESCRIPTION	REFERENCE DES	CRITICAL	BOM OPTION
860-0170	1	STDOFF,BLUETOOTH,SHORT	BS4		
860-0171	1	STDOFF,BLUETOOTH,LONG	BS3		

SERIAL DOWNLOAD INTERFACE

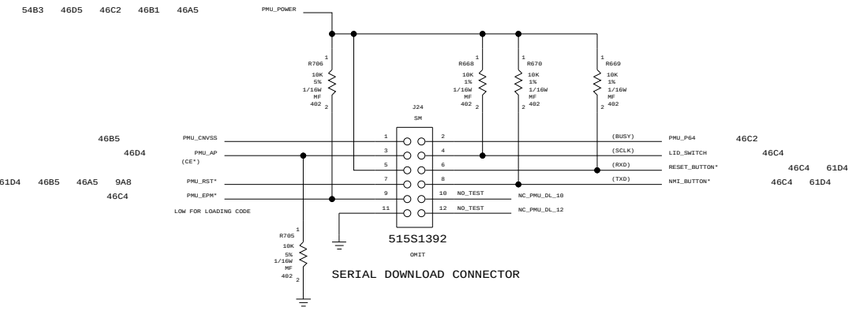

515S1392

SERIAL DOWNLOAD CONNECTOR

'KITCHEN SINK' CONNECTOR

(MICROPHONE,INTERNAL SPEAKER CONNECTIONS

INVERTER,LCD,LED & FAN POWER)

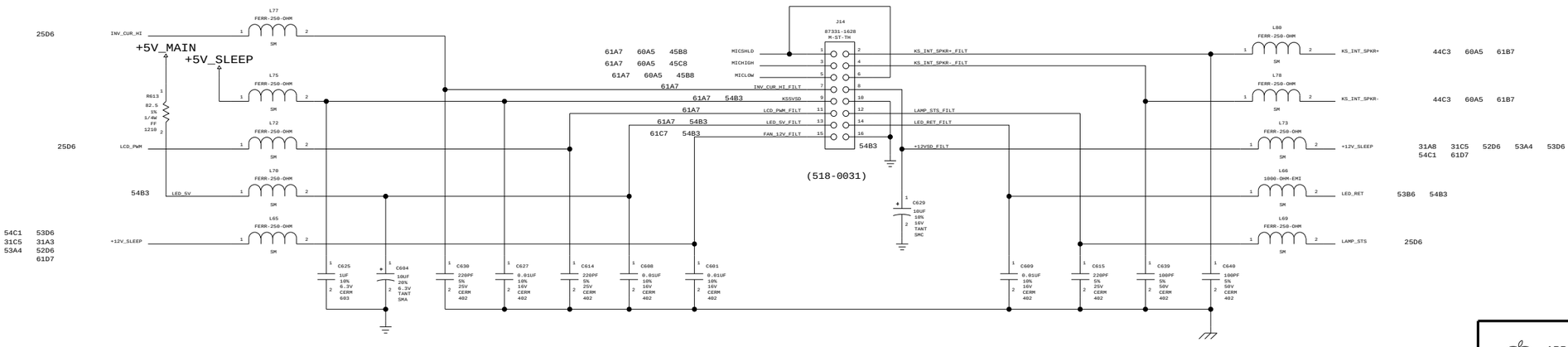

(518-0031)

MODEM, BLUETOOTH, KITCHEN SINK & SERIAL DOWNLOAD

NOTICE OF PROPRIETARY PROPERTY

LAST MODIFIED=Wed May 28 20:23:37 2003
THE INFORMATION CONTAINED HEREIN IS THE PROPRIETARY PROPERTY OF APPLE COMPUTER, INC. THE POSSESSOR AGREES TO THE FOLLOWING

I TO MAINTAIN THE DOCUMENT IN CONFIDENCE

II NOT TO REPRODUCE OR COPY IT

III NOT TO REVEAL OR PUBLISH IN WHOLE OR PART

APPLE COMPUTER INC.

SIZE	DRAWING NUMBER	REV.
D	051-6490	A

SCALE	SHT	OF
NONE	31	74

DRAWING

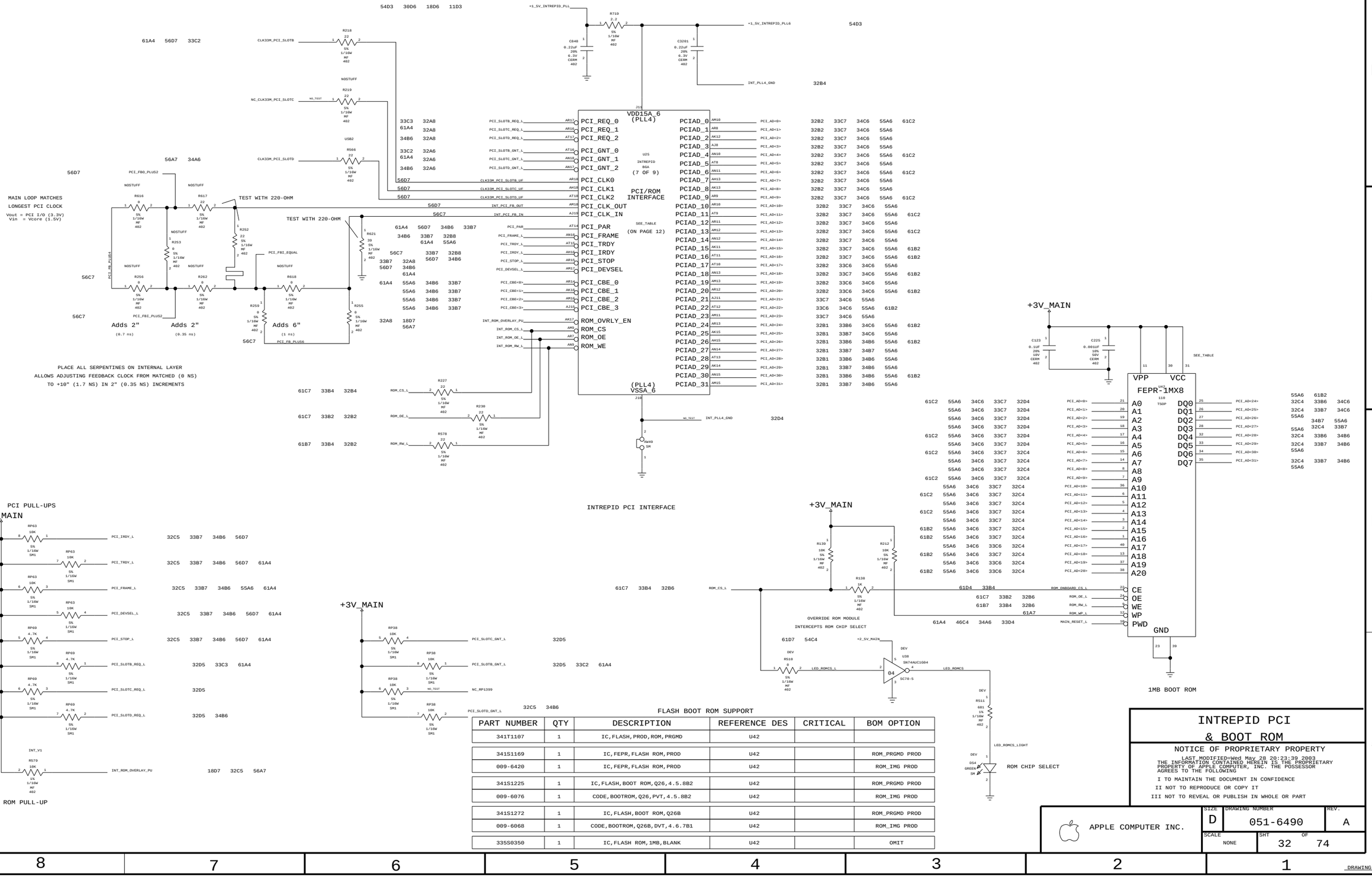

FLASH BOOT ROM SUPPORT

PART NUMBER	QTY	DESCRIPTION	REFERENCE DES	CRITICAL	BOM OPTION
341T1107	1	IC,FLASH,PROD,ROM,PRGMD	U42		
341S1169	1	IC,FEPR,FLASH ROM,PROD	U42		ROM_PRGMD PROD
009-6420	1	IC,FEPR,FLASH ROM,PROD	U42		ROM_IMG PROD
341S1225	1	IC,FLASH,BOOT ROM,Q26,4.5.8B2	U42		ROM_PRGMD PROD
009-6076	1	CODE,BOOTROM,Q26,PVT,4.5.8B2	U42		ROM_IMG PROD
341S1272	1	IC,FLASH,BOOT ROM,Q26B	U42		ROM_PRGMD PROD
009-6068	1	CODE,BOOTROM,Q26B,DVT,4.6.7B1	U42		ROM_IMG PROD
335S0350	1	IC,FLASH ROM,1MB,BLANK	U42		OMIT

CR-33

PLACE RP'S NEAR WIRELESS CONNECTOR

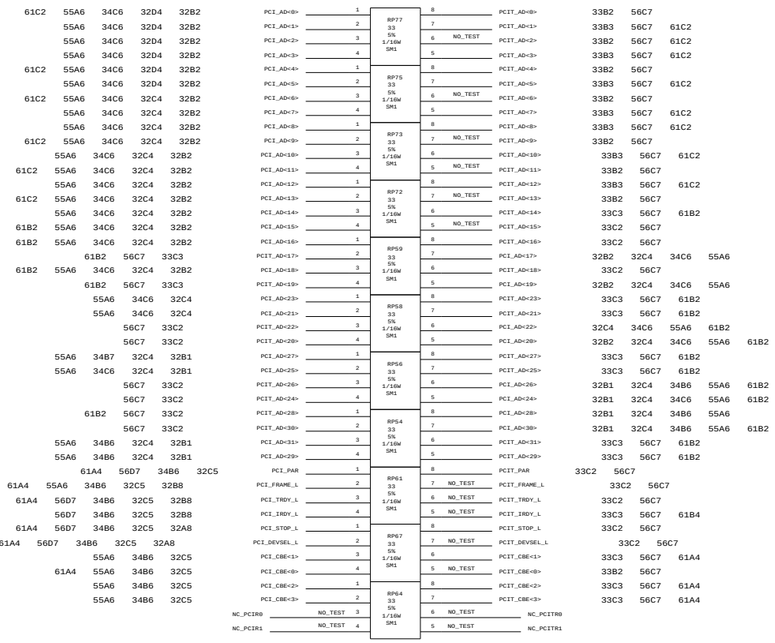

61C2 55A6 34C6 32D4 32B2
55A6 34C6 32D4 32B2
55A6 34C6 32D4 32B2
55A6 34C6 32D4 32B2
61C2 55A6 34C6 32D4 32B2
55A6 34C6 32D4 32B2
61C2 55A6 34C6 32C4 32B2
55A6 34C6 32C4 32B2
55A6 34C6 32C4 32B2
61C2 55A6 34C6 32C4 32B2
55A6 34C6 32C4 32B2
61C2 55A6 34C6 32C4 32B2
55A6 34C6 32C4 32B2
61C2 55A6 34C6 32C4 32B2
55A6 34C6 32C4 32B2
61B2 55A6 34C6 32C4 32B2
61B2 55A6 34C6 32C4 32B2
61B2 56C7 33C3
61B2 55A6 34C6 32C4 32B2
61B2 56C7 33C3
55A6 34C6 32C4
55A6 34C6 32C4
56C7 33C2
56C7 33C2
55A6 34B7 32C4 32B1
55A6 34C6 32C4 32B1
56C7 33C2
56C7 33C2
61B2 56C7 33C2
56C7 33C2
55A6 34B6 32C4 32B1
55A6 34B6 32C4 32B1
61A4 56D7 34B6 32C5
61A4 55A6 34B6 32C5 32B8
61A4 56D7 34B6 32C5 32B8
56D7 34B6 32C5 32B8
61A4 56D7 34B6 32C5 32A8
61A4 56D7 34B6 32C5 32A8
55A6 34B6 32C5
61A4 55A6 34B6 32C5
55A6 34B6 32C5
55A6 34B6 32C5

33B2 56C7
33B3 56C7 61C2
33B2 56C7 61C2
33B3 56C7 61C2
33B2 56C7
33B3 56C7 61C2
33B2 56C7
33B3 56C7 61C2
33B3 56C7 61C2
33B2 56C7
33B3 56C7 61C2
33B2 56C7
33B3 56C7 61C2
33B2 56C7
33C3 56C7 61B2
33C2 56C7
32B2 32C4 34C6 55A6
33C2 56C7
32B2 32C4 34C6 55A6
33C3 56C7 61B2
32C4 34C6 55A6 61B2
32B2 32C4 34C6 55A6 61B2
33C3 56C7 61B2
33C3 56C7 61B2
32B1 32C4 34B6 55A6 61B2
32B1 32C4 34C6 55A6 61B2
32B1 32C4 34B6 55A6
32B1 32C4 34B6 55A6 61B2
33C3 56C7 61B2
33C3 56C7 61B2
33C2 56C7
33C2 56C7
33C2 56C7
33C3 56C7 61A4
33B2 56C7
33C3 56C7 61A4
33C3 56C7 61A4

61A4 46C4 34A6 32A2

61B7 32B6 32B2

61D4 32B2

61C7 32B6 32B4

+3V_MAIN

NOSTUFF
R949 10K 1% 1/16W MF 402

NOSTUFF
R950 10K 1% 1/16W MF 402

+3V_MAIN

R948 0 5% 1/16W MF 402
MAIN_RESET_L
MAIN_RESET_L_PU

RF_DISABLE_L
PCI_SLOTB_REQ_L

J25
EDGE-SOCKET-UP
F-RT-SM-4MM
TOP_CONTACTS5 BOT_CONTACTS

61B2 56C7 33B6 PCIT_AD<31>
61B2 56C7 33B6 PCIT_AD<29>
61B2 56C7 33B6 PCIT_AD<27>
61B2 56C7 33B6 PCIT_AD<25>
61A4 56C7 33B6 PCIT_CBE<3>
61B2 56C7 33C6 PCIT_AD<23>
61B2 56C7 33C6 PCIT_AD<21>
61B2 56C7 33C7 PCIT_AD<19>
61B2 56C7 33C7 PCIT_AD<17>
61A4 56C7 33B6 PCIT_CBE<2>
61B4 56C7 33B6 PCIT_IRDY_L
RF_CLKRUN_L
61B4
61A4
56C7 33B6 PCIT_CBE<1>
56C7 33C6 PCIT_AD<14>
61B2
61C2
56C7 33C6 PCIT_AD<12>
56C7 33C6 PCIT_AD<10>
61C2
ROM_RW_L
PCIT_AD<8>
56C7 33C6 PCIT_AD<7>
61C2
61C2 56C7 33C6 PCIT_AD<5>
ROM_ONBOARD_CS_L
61C2 56C7 33C6 PCIT_AD<3>
61C2 56C7 33C6 PCIT_AD<1>
ROM_CS_L

CLK33M_PCI_SLOTB 32D7 56D7 61A4
PCI_SLOTB_GNT_L 32A6 32D5 61A4
PMU_PME_LL
R951 0 1/16W NOSTUFF 2 MF 402
PMU_PME_L 30B5 34A7 46B2 61A4
33SLOTB_INT_L 30B7 61A4
PCIT_AD<30> 33B7 56C7
PCIT_AD<28> 33B7 56C7 61B2
PCIT_AD<26> 33B7 56C7
PCIT_AD<24> 33B7 56C7
61A4
WL_PCI_IDSEL
PCIT_AD<22> 33C7 56C7
PCIT_AD<20> 33C7 56C7
PCIT_PAR 33B6 56C7
PCIT_AD<18> 33C6 56C7
PCIT_AD<16> 33C6 56C7
R285 22 5% 1/16W MF 402
PCIT_FRAME_L 33B6 56C7
PCIT_TRDY_L 33B6 56C7
PCIT_STOP_L 33B6 56C7
PCIT_DEVSEL_L 33B6 56C7
PCIT_AD<15> 33C6 56C7
PCIT_AD<13> 33C6 56C7
PCIT_AD<11> 33C6 56C7
PCIT_AD<9> 33C6 56C7
PCIT_CBE<0> 33B6 56C7
ROM_OE_L 32B2 32B6 61C7
PCIT_AD<6> 33C6 56C7
PCIT_AD<4> 33C6 56C7
PCIT_AD<2> 33C6 56C7 61C2
PCIT_AD<0> 33C6 56C7

NC_WL<1> NO_TEST 77 78 NO_TEST NC_USB_M
NC_WL<3> NO_TEST 79 80 NO_TEST NC_USB_P
NC_WL<5> NO_TEST 81 82 NO_TEST NC_WL<2>
NC_WL<7> NO_TEST 83 84 NO_TEST NC_WL<4>
NC_WL<9> NO_TEST 85 86 NO_TEST NC_WL<6>
NC_WL<11> NO_TEST 87 88 NO_TEST NC_WL<8>
NC_WL<13> NO_TEST 89 90 NO_TEST NC_WL<10>
NC_WL<15> NO_TEST 91 92 NO_TEST NC_WL<12>
NC_WL<17> NO_TEST 93 94 NO_TEST NC_WL<14>
NC_WL<19> NO_TEST 95 96 NO_TEST NC_WL<16>
NC_WL<21> NO_TEST 97 98 NO_TEST NC_WL<18>
NC_WL<23> NO_TEST 99 100 NO_TEST NC_WL<20>

+3V_MAIN

C250 10UF 20% 6.3V CERM 805
C260 10UF 20% 6.3V CERM 1206
C259 0.01UF 10% 16V CERM 402
C249 0.22UF 20% 6.3V CERM 402

(516S0046)

WIRELESS CARD MOUNTING HARDWARE SUPPORT

PART NUMBER	QTY	DESCRIPTION	REFERENCE DES	CRITICAL	BOM OPTION
815-7245	1	WIRELESS CARD GUIDE,J25	J251		
452-0411	2	NUT,HEX,M2 X 1.5H, J25	J252,J253		
452-0412	2	SCREW,M2 X 0.4 X 6.0 L,J25	J254,J255		

WIRELESS PCI

NOTICE OF PROPRIETARY PROPERTY

LAST MODIFIED=Wed May 28 20:23:40 2003
THE INFORMATION CONTAINED HEREIN IS THE PROPRIETARY PROPERTY OF APPLE COMPUTER, INC. THE POSSESSOR AGREES TO THE FOLLOWING

I TO MAINTAIN THE DOCUMENT IN CONFIDENCE

II NOT TO REPRODUCE OR COPY IT

III NOT TO REVEAL OR PUBLISH IN WHOLE OR PART

APPLE COMPUTER INC.

SIZE	DRAWING NUMBER	REV.
D	051-6490	A

SCALE	SHT	OF
NONE	33	74

DRAWING

CR-34

+3V_MAIN

USB2 C519 0.1UF 20% 10V CERM 402
USB2 C522 0.1UF 20% 10V CERM 402
USB2 C527 0.1UF 20% 10V CERM 402
USB2 C547 0.1UF 20% 10V CERM 402
USB2 C523 0.1UF 20% 10V CERM 402
USB2 C541 0.1UF 20% 10V CERM 402
USB2 C548 0.1UF 20% 10V CERM 402
USB2 C555 0.1UF 20% 10V CERM 402
USB2 C559 0.1UF 20% 10V CERM 402
USB2 C546 0.1UF 20% 10V CERM 402
USB2 C516 0.1UF 20% 10V CERM 402
USB2 C537 0.1UF 20% 10V CERM 402
USB2 C536 0.1UF 20% 10V CERM 402
USB2 C515 0.1UF 20% 10V CERM 402
USB2 C570 0.1UF 20% 10V CERM 402
USB2 C530 0.1UF 20% 10V CERM 402
USB2 C517 10UF 20% 6.3V CERM 805
USB2 C573 10UF 20% 6.3V CERM 1206
USB2 C574 10UF 20% 6.3V CERM 1206
USB2 C531 10UF 20% 6.3V CERM 805

+3V_MAIN

USB2 LS8 100-OHM-EMI SM

54A3 NEC_VDD

USB2 C526 0.1UF 20% 10V CERM 402
USB2 C529 0.1UF 20% 10V CERM 402
USB2 C511 10UF 20% 6.3V CERM 805

NOSTUFF R89 100K 1% 1/16W MF 402

NEC_XT2_B

Y7 30.0000M SM-1

USB2 C77 10PF 5% 50V CERM 402
USB2 C514 10PF 5% 50V CERM 402
USB2 R129 100 1% 1/16W MF 402

61C2	55A6	33C7	32D4	32B2	PCI_AD<0> M5 AD0
	55A6	33C7	32D4	32B2	PCI_AD<1> P5 AD1
	55A6	33C7	32D4	32B2	PCI_AD<2> N5 AD2
	55A6	33C7	32D4	32B2	PCI_AD<3> P4 AD3
61C2	55A6	33C7	32D4	32B2	PCI_AD<4> N4 AD4
	55A6	33C7	32D4	32B2	PCI_AD<5> M3 AD5
61C2	55A6	33C7	32C4	32B2	PCI_AD<6> N3 AD6
	55A6	33C7	32C4	32B2	PCI_AD<7> M1 AD7
	55A6	33C7	32C4	32B2	PCI_AD<8> L2 AD8
61C2	55A6	33C7	32C4	32B2	PCI_AD<9> L1 AD9
	55A6	33C7	32C4	32B2	PCI_AD<10> K2 AD10
61C2	55A6	33C7	32C4	32B2	PCI_AD<11> L3 AD11
	55A6	33C7	32C4	32B2	PCI_AD<12> K1 AD12
61C2	55A6	33C7	32C4	32B2	PCI_AD<13> K3 AD13
	55A6	33C7	32C4	32B2	PCI_AD<14> J2 AD14
61B2	55A6	33C7	32C4	32B2	PCI_AD<15> J1 AD15
61B2	55A6	33C7	32C4	32B2	PCI_AD<16> F2 AD16
	55A6	33C6	32C4	32B2	PCI_AD<17> E3 AD17
61B2	55A6	33C7	32C4	32B2	PCI_AD<18> E1 AD18
	55A6	33C6	32C4	32B2	PCI_AD<19> D3 AD19
61B2	55A6	33C6	32C4	32B2	PCI_AD<20> D1 AD20
		55A6	33C7	32C4	PCI_AD<21> D2 AD21
	61B2	55A6	33C6	32C4	PCI_AD<22> C2 AD22
		55A6	33C7	32C4	PCI_AD<23> C1 AD23
61B2	55A6	33B6	32C4	32B1	PCI_AD<24> B4 AD24
	55A6	33B7	32C4	32B1	PCI_AD<25> A4 AD25
61B2	55A6	33B6	32C4	32B1	PCI_AD<26> B5 AD26
55A6	33B7	32C4	32B1		PCI_AD<27> C4 AD27
	55A6	33B6	32C4	32B1	PCI_AD<28> A5 AD28
	55A6	33B7	32C4	32B1	PCI_AD<29> C5 AD29
61B2	55A6	33B6	32C4	32B1	PCI_AD<30> B6 AD30
	55A6	33B7	32C4	32B1	PCI_AD<31> A6 AD31

61A4	55A6	33B7	32C5		PCI_CBE<0> M2 CBE0
	55A6	33B7	32C5		PCI_CBE<1> J3 CBE1
	55A6	33B7	32C5		PCI_CBE<2> F1 CBE2
	55A6	33B7	32C5		PCI_CBE<3> C3 CBE3
		61A4	56D7	33B7	32C5 PCI_PAR J4 PAR
61A4	55A6	33B7	32C5	32B8	PCI_FRAME_L F3 FRAME
	56D7	33B7	32C5	32B8	PCI_IRDY_L F4 IRDY
61A4	56D7	33B7	32C5	32B8	PCI_TRDY_L G1 TRDY
61A4	56D7	33B7	32C5	32A8	PCI_STOP_L G3 STOP
					USB2_IDSEL B3 IDSEL
61A4	56D7	33B7	32C5	32A8	PCI_DEVSEL_L G2 DEVSEL
			32D5	32A8	PCI_SLOTD_REQ_L C6 REQ
			32C5	32A6	PCI_SLOTD_GNT_L D6 GNT
					PCI_SLOTD_PERR_L H2 PERR
					33PCI_SLOTD_SERR_L OD H1 SERR
		30B8	30B5		INT_EXTINT17_PU OD C7 INTA
					OD B7 INTB
					OD A7 INTC
		56A7	32D7		CLK33M_PCI_SLOTD A8 PCLK
	61A7	46D3	46B8	46B5	37B8 IO_RESET_L B8 VBBRST STARTUP & RESTARTS
					USB2_CRUN_L N6 CRUN
61A4	46B2	33C2	30B5		PMU_PME_L OD D9 PME
		33D4	32A2		MAIN_RESET_L C9 VCCRST STARTUP, RESTARTS, WAKEUP
34A7	30B5	34A7	30B5		NC_USB2_SMI_L OD L6 SMI
					L7 LEGC

+3V_MAIN

USB2 R127 4.7K 5% 1/16W MF 402
USB2 R128 4.7K 5% 1/16W MF 402
USB2 R494 22 5% 1/16W MF 402
USB2 R484 0
R78 200 5% 1/16W MF 402

VDD_PCI VDD AVDD VSS

U11 NEC_UPD720101_USB2 FBGA

					XT1/SCLK L9 58B3 USB2_XT1
					XT2 P8 58B3 USB2_XT2
					RSDM1 M14 58B3 USB2_RSDAM
58B3	35B7	34C1			DM1 M13 USB2_DAN_F
					DP1 L14 USB2_DAP_F
					RSDP1 K13 58B3 USB2_RSDAP
					RSDM2 K14 58B3 USB2_RSDBM
					DM2 K12 USB2_DBN_F
58B3	35C7	34C1			DP2 J14 USB2_DBP_F
					RSDP2 J12 58B3 USB2_RSDBP
					RSDM3 H11 58B3 USB2_RSDCM
					DM3 G11 USB2_DCN_F
					DP3 G13 USB2_DCP_F
					RSDP3 G14 58B3 USB2_RSDCP
					RSDM4 F12 NC_USB2_RSDEM
					DM4 F14
					DP4 E12
					RSDP4 E14 NC_USB2_RSDEP
					RSDM5 E13 NC_USB2_RSDFM
					DM5 D14
					DP5 C13
					RSDP5 C14 NC_USB2_RSDFP
58B3					RREF P11 USB2_RREF
					OCI1 B12 USB_PWR_FLT*
					OCI2 B11
					OCI3 B10
					OCI4 A10 U_USB_PWR_FLT*
					OCI5 B9
					PPON1 C12 NC_USB2_PPON1
					PPON2 A11 NC_USB2_PPON2
					PPON3 C11 NC_USB2_PPON3
					PPON4 C10 NC_USB2_PPON4
					PPON5 A9 NC_USB2_PPON5
					NC1 P6 USB2_NC1
					NC2 M6 USB2_NC2
					NTEST1 M8 NC_USB2_NTEST1
					SMC M7 NC_USB2_SMC
					TEB N7 NC_USB2_TEB
					AMC P7 NC_USB2_AMC
					TEST L8 NC_USB2_TEST
					NANDTEST M10 NC_USB2_NANDTEST
					SRCLK M9 NC_USB2_SRCLK
					SRDTA N9 NC_USB2_SRDTA
					SRMOD P9 NC_USB2_SRMOD
					AVSS

AVSS(R)

USB2 R464 35.7
USB2 R465 35.7
USB2 R466 35.7
USB2 R467 35.7
USB2 R468 35.7
USB2 R469 35.7

USB2_DAN_F	34C4	35B7	58B3	
USB2_DAP_F	34C1	35B7	58B3	58B3 35B7 34C1
USB2_DBN_F	34C1	35C7	58B3	58B3 34C1 35C7
USB2_DBP_F	34C4	35C7	58B3	
USB2_DCN_F	34C1	35D7	58B3	58B3 34C1 35D7
USB2_DCP_F	34C1	35D7	58B3	58B3 34C1 35D7

OVERLAP STUFFING OF 35.7OHMS HERE WITH 0OHMS ON SH31 TO MINIMIZE STUBS

+3V_MAIN

USB2 R480 4.7K 5% 1/16W MF 402

USB2 R476 9.09K 1% 1/16W MF 402

TIED TO BALL N11

USB_PWR_FLT* 30B3 34B1 35A6

+3V_MAIN

USB2 R470 2.2K 5% 1/16W MF 402
USB2 R490 2.2K 5% 1/16W MF 402

USB2 CONTROLLER

NOTICE OF PROPRIETARY PROPERTY

LAST_MODIFIED=Wed May 28 20:23:41 2003
THE INFORMATION CONTAINED HEREIN IS THE PROPRIETARY PROPERTY OF APPLE COMPUTER, INC. THE POSSESSOR AGREES TO THE FOLLOWING

I TO MAINTAIN THE DOCUMENT IN CONFIDENCE

II NOT TO REPRODUCE OR COPY IT

III NOT TO REVEAL OR PUBLISH IN WHOLE OR PART

APPLE COMPUTER INC.

SIZE	DRAWING NUMBER	REV.
D	051-6490	A
SCALE: NONE	SHT 34 OF 74	

DRAWING

CR-35

PART#	QTY	DESCRIPTION	REFERENCE DESIGNATOR(S)	CRITICAL	BOM OPTION
155S0035	6	30-OHM-EMI	L30,L37,L29,L28,L31,L30		USB1
10151000	6	RES,0-OHM,5%,1/10W,0805	L30,L37,L29,L28,L31,L30		USB2

USB1

60B5 30B2 USB_DCN_F — R44 0 5% 1/16W MF 402

USB2

58B3 34C1 USB2_DCN_F 58A3 — R460 0 5% 1/16W MF 402 — USBT_DCN_F

USB1

60B5 30B2 USB_DCP_F — R43 0 5% 1/16W MF 402

USB2

58B3 34C1 USB2_DCP_F 58A3 — R461 0 5% 1/16W MF 402 — USBT_DCP_F

SEE_TABLE — L38 SM 30-OHM-EMI

SEE_TABLE — L37 SM 30-OHM-EMI

R455 15K 5% 1/16W MF 402

R454 15K 5% 1/16W MF 402

USB1 C403 33PF 5% 50V CERM 402

USB1 C404 33PF 5% 50V CERM 402

ALT CHASSIS

61B4 54A3 35C3 35B3 35A4 USB_PORT_PWR

61C4 58A3 USB_DCN_CON

61C4 58A3 USB_DCP_CON

54A3 35C3 35B3 35A4 USB_GND

C2 22UF 20% 16V CERM 1210

C397 0.01UF 10% 16V CERM 402

C405 0.01UF 10% 16V CERM 402

PLACE UNDER USB CONNECTOR

ALT CHASSIS

CRITICAL

J7 F-RT-USB-NMP1 TH-1 SYM_VER-2

USB PORT 3

(514-0048)

C413 0.01UF 10% 16V CERM 402

ALT CHASSIS

USB1

60B5 30B2 USB_DBN_F — R46 0 5% 1/16W MF 402

USB2

58B3 34C1 USB2_DBN_F — R458 0 5% 1/16W MF 402 — USBT_DBN_F

USB1

60B5 30B2 USB_DBP_F — R45 0 5% 1/16W MF 402

USB2

58B3 34C4 34C1 USB2_DBP_F — R450 0 5% 1/16W MF 402 — USBT_DBP_F

SEE_TABLE — L29 SM 30-OHM-EMI

SEE_TABLE — L28 SM 30-OHM-EMI

R453 15K 5% 1/16W MF 402

R452 15K 5% 1/16W MF 402

USB1 C387 33PF 5% 50V CERM 402

USB1 C383 33PF 5% 50V CERM 402

ALT CHASSIS

PLACE NEAR CONNECTOR

61B4 54A3 35D3 35B3 35A4 USB_PORT_PWR

61C4 58A3 USB_DAN_CON

61C4 58A3 USB_DAP_CON

54A3 35D3 35B3 35A4 USB_GND

C1 22UF 20% 16V CERM 1210

C380 0.01UF 10% 16V CERM 402

C386 0.01UF 10% 16V CERM 402

PLACE UNDER USB CONNECTOR

ALT CHASSIS

CRITICAL

J4 F-RT-USB-NMP1 TH-1 SYM_VER-2

USB PORT 2

(514-0048)

C433 0.01UF 10% 16V CERM 402

ALT CHASSIS

USB1

60B5 30B2 USB_DAN_F — R48 0 5% 1/16W 402 MF

USB2

58B3 34C4 34C1 USB2_DAN_F — R456 0 5% 1/16W MF 402 — USBT_DAN_F

USB1

60B5 30B2 USB_DAP_F — R47 0 5% 1/16W MF 402

USB2

58B3 34C1 USB2_DAP_F — R457 0 5% 1/16W MF 402 — USBT_DAP_F

SEE_TABLE — L31 SM 30-OHM-EMI

SEE_TABLE — L30 SM 30-OHM-EMI

R451 15K 5% 1/16W MF 402

R450 15K 5% 1/16W MF 402

USB1 C391 33PF 5% 50V CERM 402

USB1 C389 33PF 5% 50V CERM 402

ALT CHASSIS

61B4 54A3 35D3 35C3 35A4 USB_PORT_PWR

61C4 58A3 USB_DBN_CON

61C4 58A3 USB_DBP_CON

54A3 35D3 35C3 35A4 USB_GND

C6 22UF 20% 16V CERM 1210

C385 0.01UF 10% 16V CERM 402

C398 0.01UF 10% 16V CERM 402

PLACE UNDER USB CONNECTOR

ALT CHASSIS

CRITICAL

J6 F-RT-USB-NMP1 TH-1 SYM_VER-2

USB PORT 1

(514-0048)

C417 0.01UF 10% 16V CERM 402

ALT CHASSIS

THE ABOVE RESISTORS SHARE THE SAME PIN-2 PAD AND ARE LOCATED AT THE USB2 CHIP

+5V_MAIN

+5V_MAIN

F1 2AMP-6V SM

5V_USB_FUSED

54A3 35A6 27D3 27C2 27B5

U1 TPS2023 SOI

IN_0 OUT_0

IN_1 OUT_1

OUT_2

54A3 USB_PWR_EN — EN OC

GND

R396 47 5% 1/16W MF 402

C449 0.1UF 20% 16V CERM 402

R398 10K 5% 1/16W MF 402

USB_PWR

USB_PWR_FLT*

L2 FERRITE-4532 SM

L4 FERRITE-4532 SM

27B5 27C2 27D3 35A6 54A3

C7 150UF 20% 6.3V TANT SMD

C5 150UF 20% 6.3V TANT SMD

61B4 54A3 35D3 35C3 35B3 USB_PORT_PWR

C396 0.01UF 10% 16V CERM 402

C377 0.01UF 10% 16V CERM 402

C382 0.01UF 10% 16V CERM 402

35C3 35B3 54A3 35D3 USB_GND

USB CONNS & PWR

NOTICE OF PROPRIETARY PROPERTY

LAST MODIFIED=Wed May 28 20:23:42 2003
THE INFORMATION CONTAINED HEREIN IS THE PROPRIETARY PROPERTY OF APPLE COMPUTER, INC. THE POSSESSOR AGREES TO THE FOLLOWING

I TO MAINTAIN THE DOCUMENT IN CONFIDENCE

II NOT TO REPRODUCE OR COPY IT

III NOT TO REVEAL OR PUBLISH IN WHOLE OR PART

APPLE COMPUTER INC.

SIZE	DRAWING NUMBER	REV.
D	051-6490	A
SCALE: NONE	SHT 35 OF 74	

DRAWING

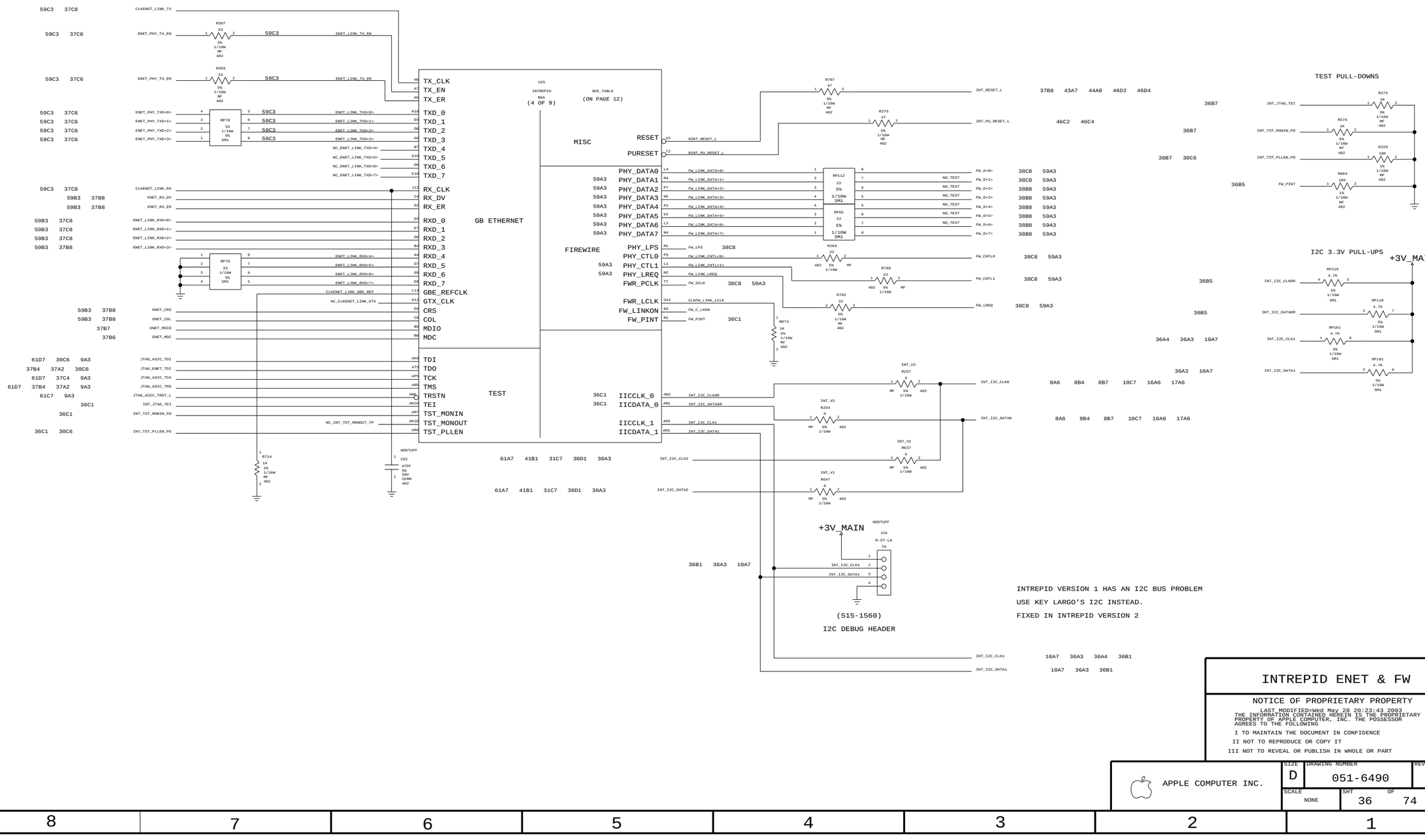

INTREPID ENET & FW

NOTICE OF PROPRIETARY PROPERTY

LAST MODIFIED=Wed May 28 20:23:43 2003
THE INFORMATION CONTAINED HEREIN IS THE PROPRIETARY PROPERTY OF APPLE COMPUTER, INC. THE POSSESSOR AGREES TO THE FOLLOWING

I TO MAINTAIN THE DOCUMENT IN CONFIDENCE

II NOT TO REPRODUCE OR COPY IT

III NOT TO REVEAL OR PUBLISH IN WHOLE OR PART

APPLE COMPUTER INC.

SIZE	DRAWING NUMBER	REV.
D	051-6490	A

SCALE	SHT	OF
NONE	36	74

DRAWING

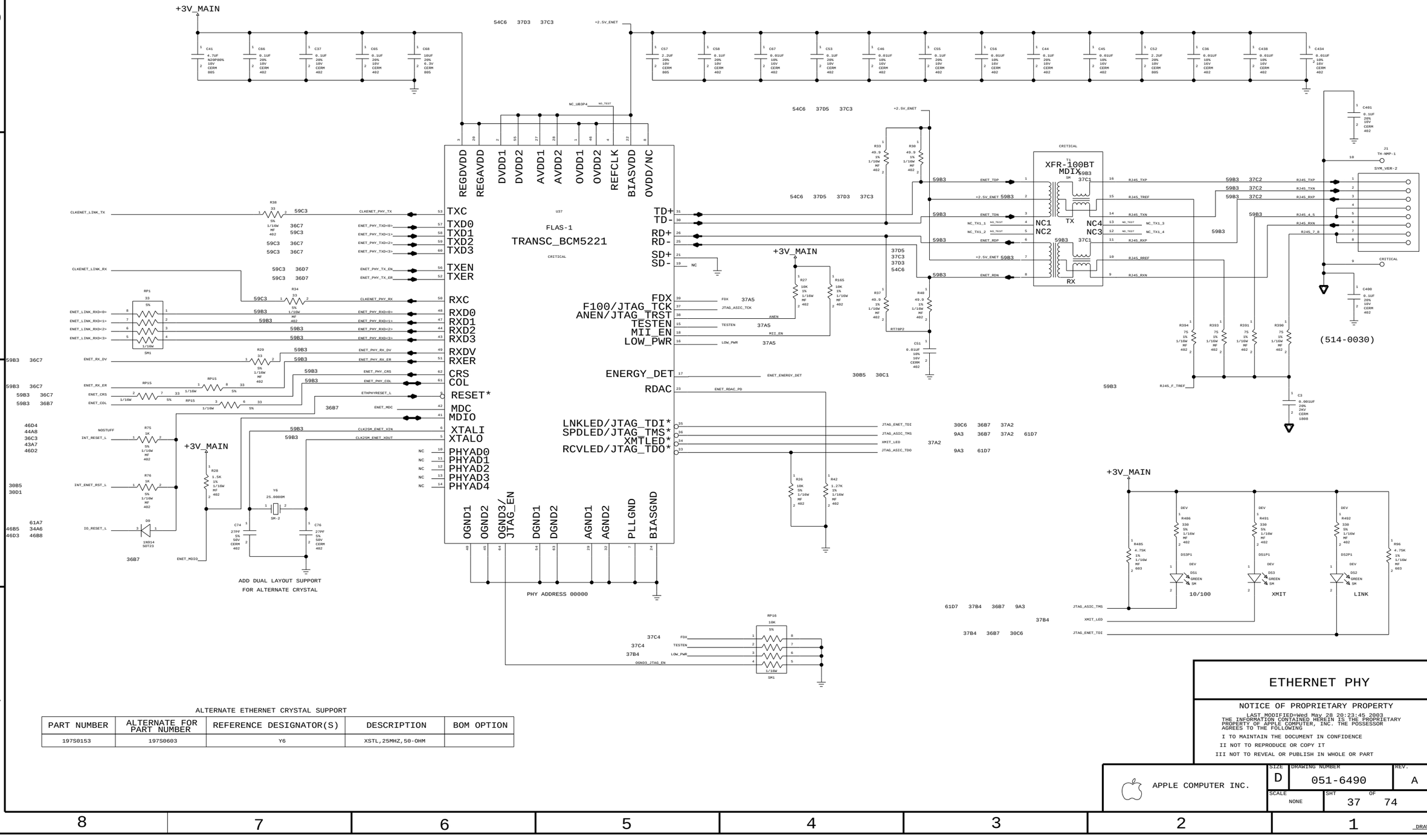

ALTERNATE ETHERNET CRYSTAL SUPPORT

PART NUMBER	ALTERNATE FOR PART NUMBER	REFERENCE DESIGNATOR(S)	DESCRIPTION	BOM OPTION
197S0153	197S0603	Y6	XSTL,25MHZ,50-OHM	

ETHERNET PHY

NOTICE OF PROPRIETARY PROPERTY

LAST MODIFIED=Wed May 28 20:23:45 2003
THE INFORMATION CONTAINED HEREIN IS THE PROPRIETARY PROPERTY OF APPLE COMPUTER, INC. THE POSSESSOR AGREES TO THE FOLLOWING

I TO MAINTAIN THE DOCUMENT IN CONFIDENCE

II NOT TO REPRODUCE OR COPY IT

III NOT TO REVEAL OR PUBLISH IN WHOLE OR PART

APPLE COMPUTER INC.

SIZE	DRAWING NUMBER	REV.
D	051-6490	A

SCALE	SHT	OF
NONE	37	74

DRAWING

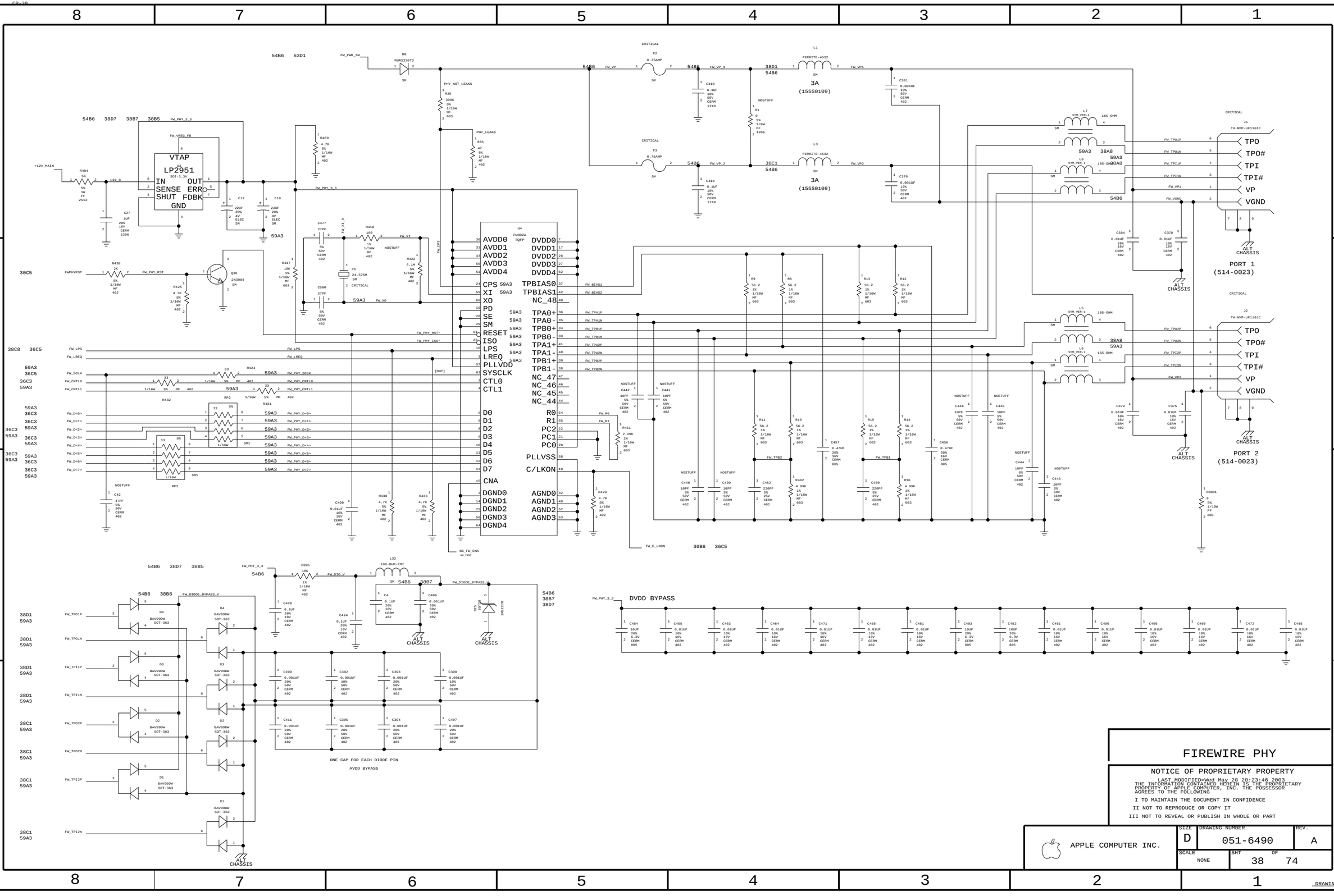

	FIREWIRE PHY		
	NOTICE OF PROPRIETARY PROPERTY LAST MODIFIED=Wed May 28 20:23:46 2003 THE INFORMATION CONTAINED HEREIN IS THE PROPRIETARY PROPERTY OF APPLE COMPUTER, INC. THE POSSESSOR AGREES TO THE FOLLOWING I TO MAINTAIN THE DOCUMENT IN CONFIDENCE II NOT TO REPRODUCE OR COPY IT III NOT TO REVEAL OR PUBLISH IN WHOLE OR PART		
APPLE COMPUTER INC.	SIZE: D	DRAWING NUMBER: 051-6490	REV.: A
	SCALE: NONE	SHT: 38 OF 74	

DRAWING

CR-39

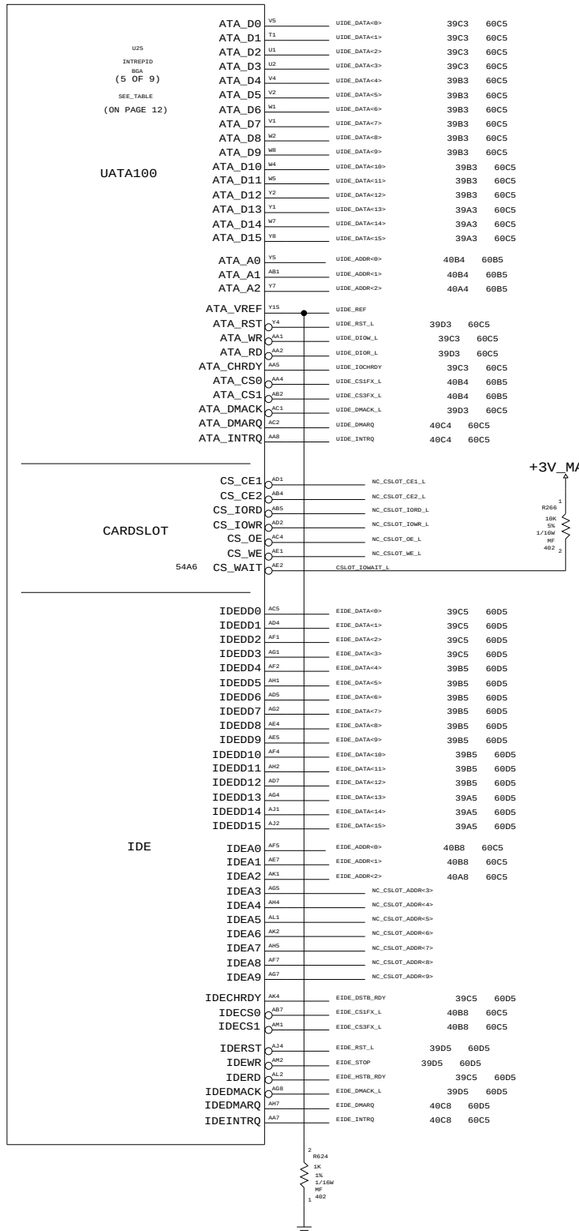

+5V_SLEEP

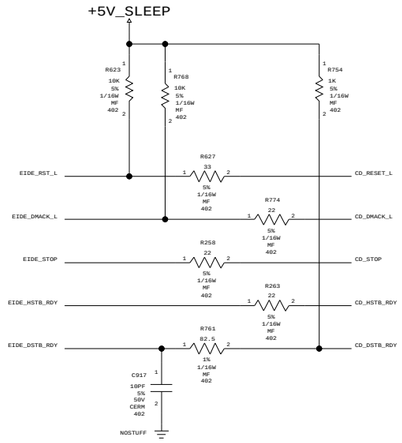

+5V_SLEEP

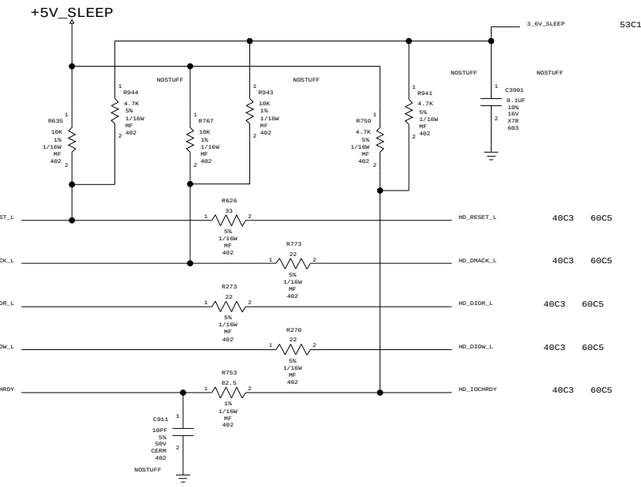

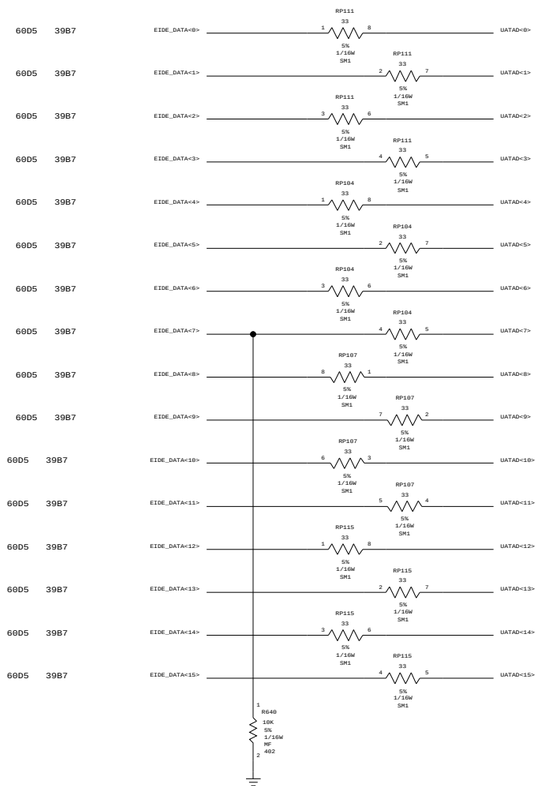

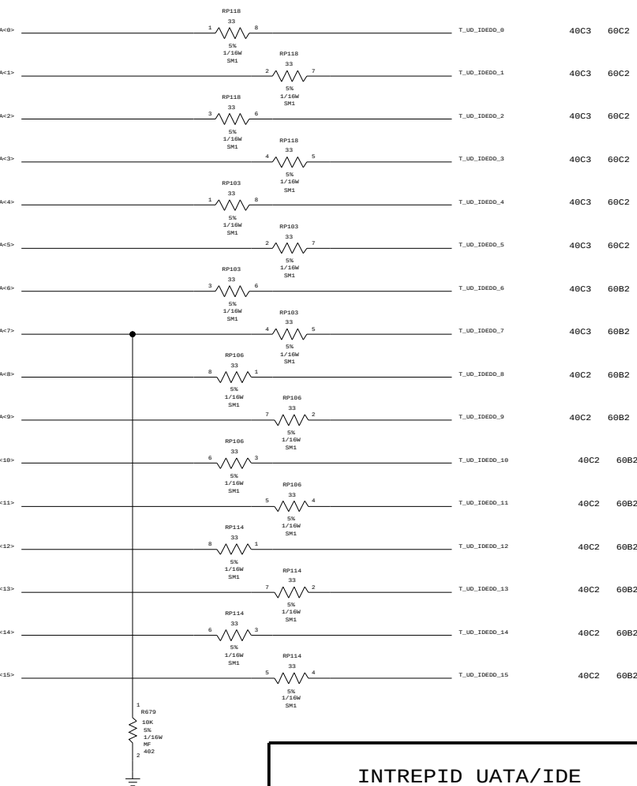

INTREPID UATA/IDE

NOTICE OF PROPRIETARY PROPERTY

LAST MODIFIED=Wed May 28 20:23:48 2003
THE INFORMATION CONTAINED HEREIN IS THE PROPRIETARY PROPERTY OF APPLE COMPUTER, INC. THE POSSESSOR AGREES TO THE FOLLOWING

I TO MAINTAIN THE DOCUMENT IN CONFIDENCE

II NOT TO REPRODUCE OR COPY IT

III NOT TO REVEAL OR PUBLISH IN WHOLE OR PART

APPLE COMPUTER INC.

SIZE	DRAWING NUMBER	REV.
D	051-6490	A
SCALE: NONE	SHT 39 OF 74	

DRAWING

OPTICAL DRIVE INTERFACE

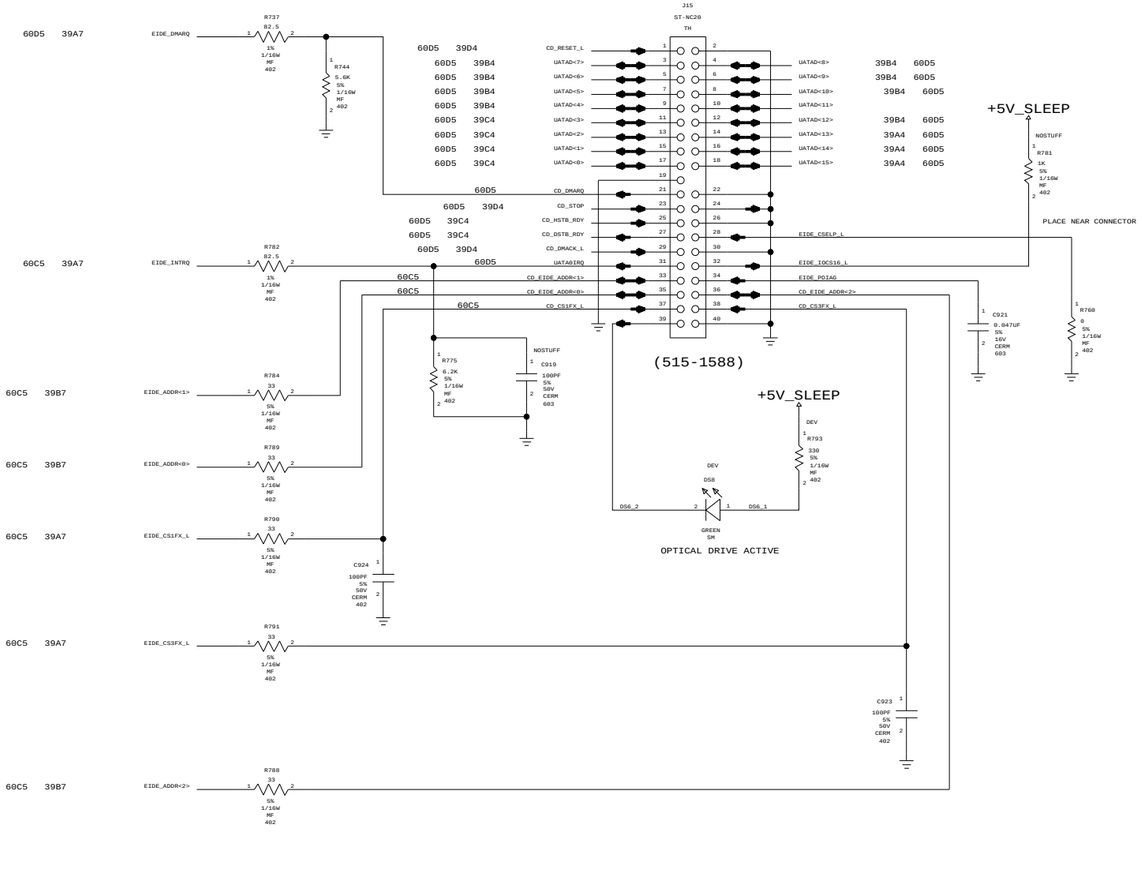

ATA-100 INTERFACE

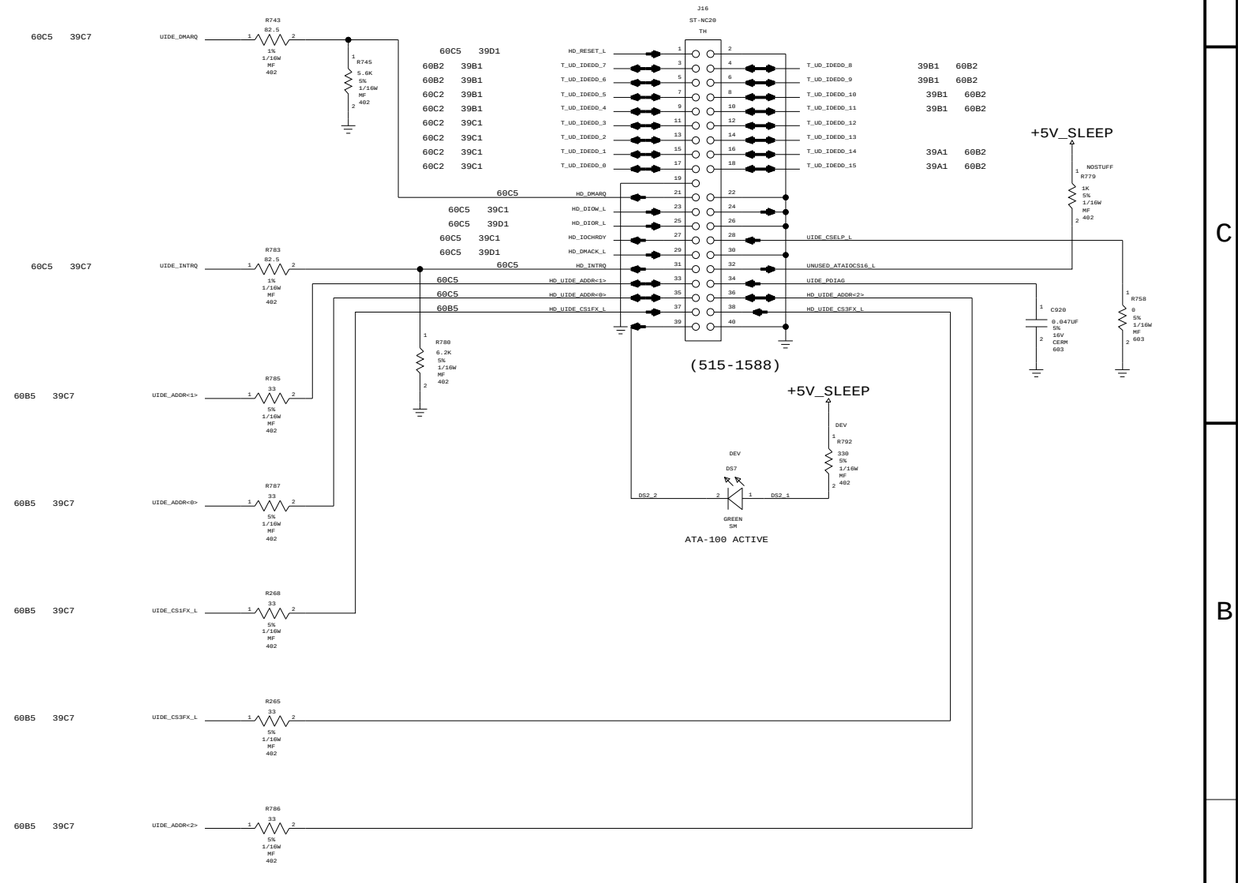

CD/HD CONS

NOTICE OF PROPRIETARY PROPERTY

LAST MODIFIED=Wed May 28 20:23:49 2003
THE INFORMATION CONTAINED HEREIN IS THE PROPRIETARY PROPERTY OF APPLE COMPUTER, INC. THE POSSESSOR AGREES TO THE FOLLOWING

I TO MAINTAIN THE DOCUMENT IN CONFIDENCE

II NOT TO REPRODUCE OR COPY IT

III NOT TO REVEAL OR PUBLISH IN WHOLE OR PART

APPLE COMPUTER INC.

SIZE	DRAWING NUMBER	REV.
D	051-6490	A

SCALE	SHT	OF
NONE	40	74

DRAWING

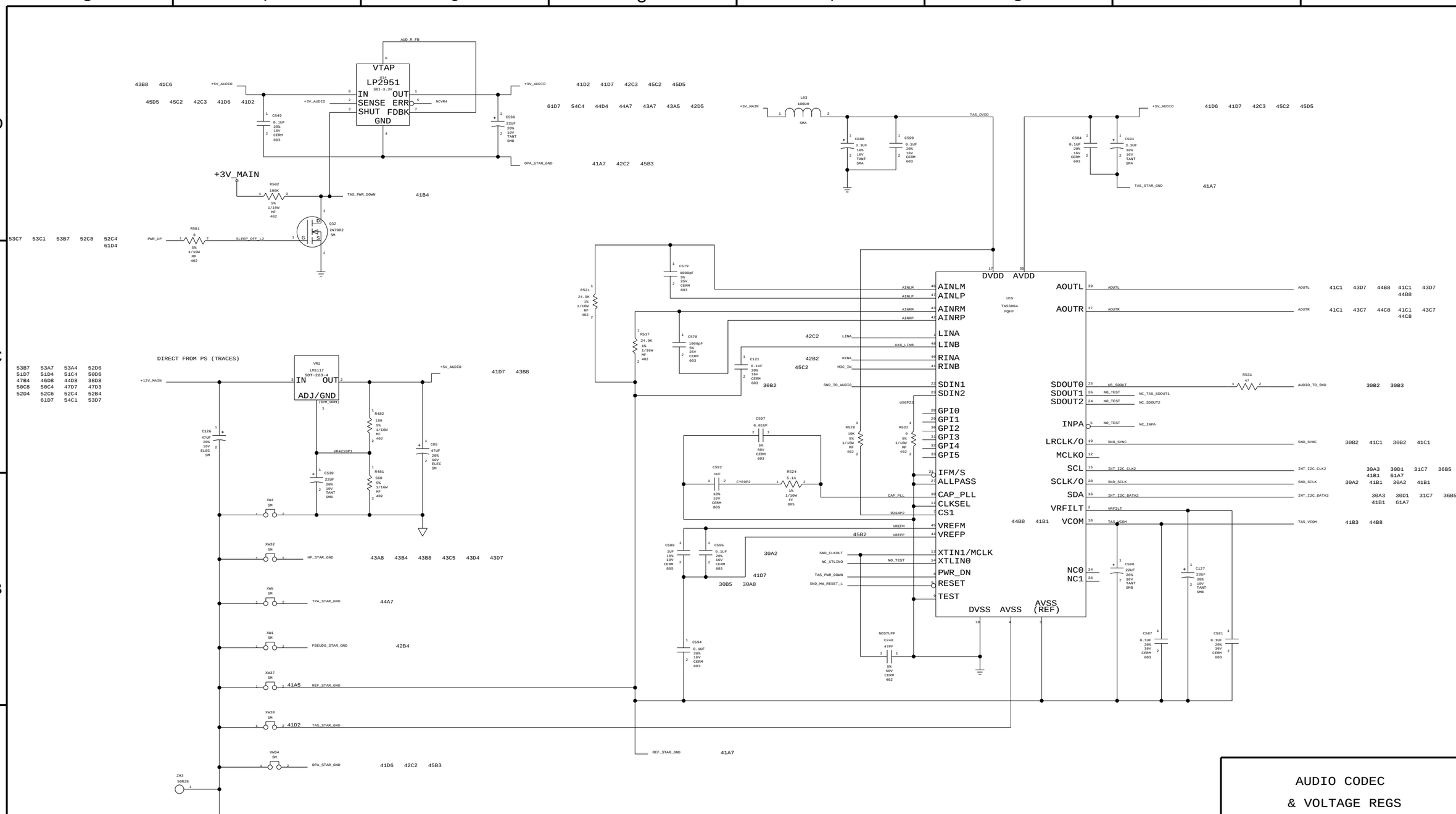

AUDIO CODEC

& VOLTAGE REGS

NOTICE OF PROPRIETARY PROPERTY

LAST MODIFIED=Wed May 28 20:23:50 2003
THE INFORMATION CONTAINED HEREIN IS THE PROPRIETARY PROPERTY OF APPLE COMPUTER, INC. THE POSSESSOR AGREES TO THE FOLLOWING

I TO MAINTAIN THE DOCUMENT IN CONFIDENCE

II NOT TO REPRODUCE OR COPY IT

III NOT TO REVEAL OR PUBLISH IN WHOLE OR PART

APPLE COMPUTER INC.

SIZE	DRAWING NUMBER	REV.
D	051-6490	A
SCALE NONE	SHT 41	OF 74

DRAWING

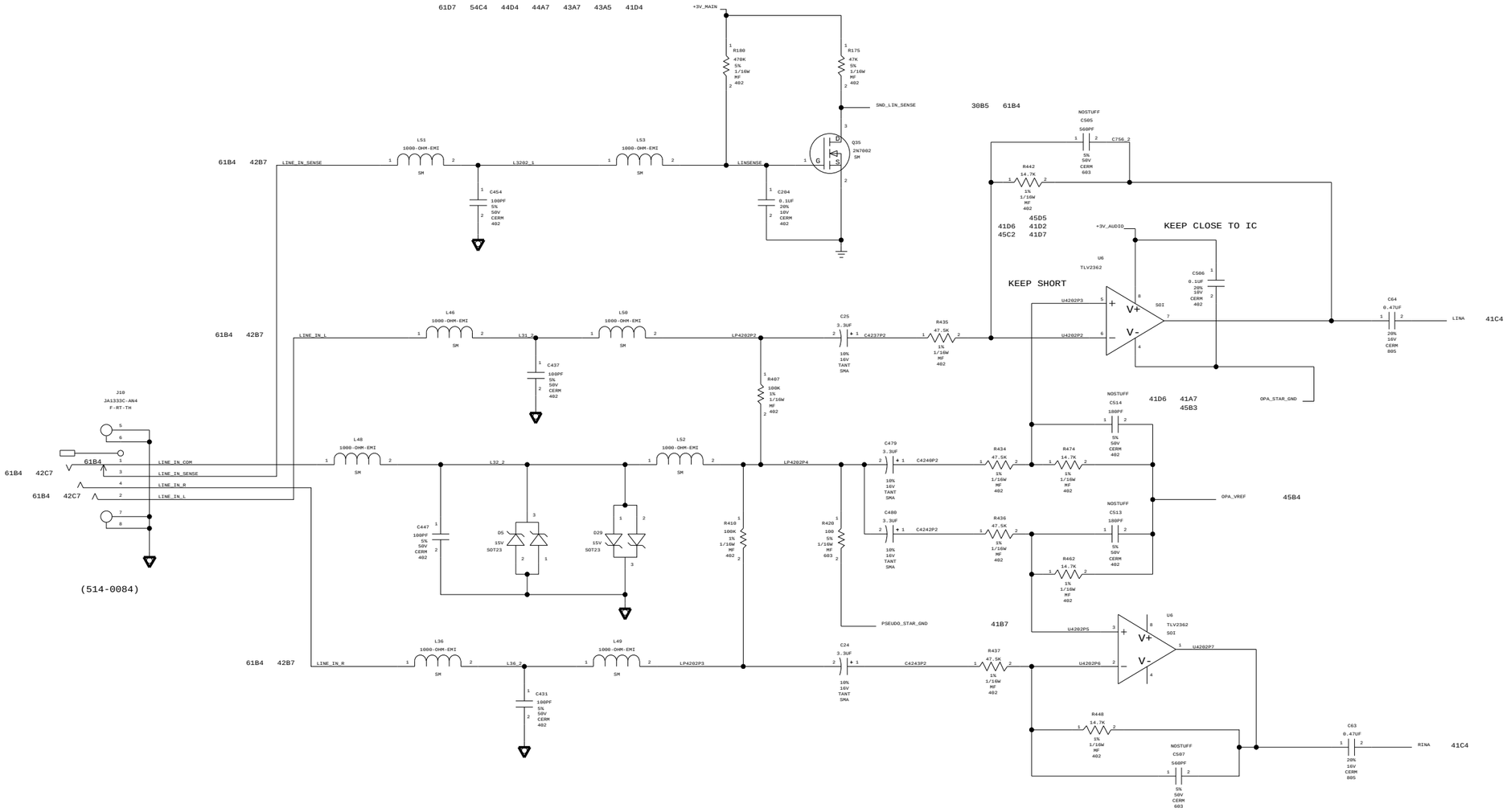

LINE IN BUFFER

NOTICE OF PROPRIETARY PROPERTY

LAST MODIFIED=Wed May 28 20:23:51 2003
THE INFORMATION CONTAINED HEREIN IS THE PROPRIETARY PROPERTY OF APPLE COMPUTER, INC. THE POSSESSOR AGREES TO THE FOLLOWING

I TO MAINTAIN THE DOCUMENT IN CONFIDENCE

II NOT TO REPRODUCE OR COPY IT

III NOT TO REVEAL OR PUBLISH IN WHOLE OR PART

APPLE COMPUTER INC.

SIZE	DRAWING NUMBER	REV.
D	051-6490	A
SCALE NONE	SHT 42 OF 74	

DRAWING

CR-43

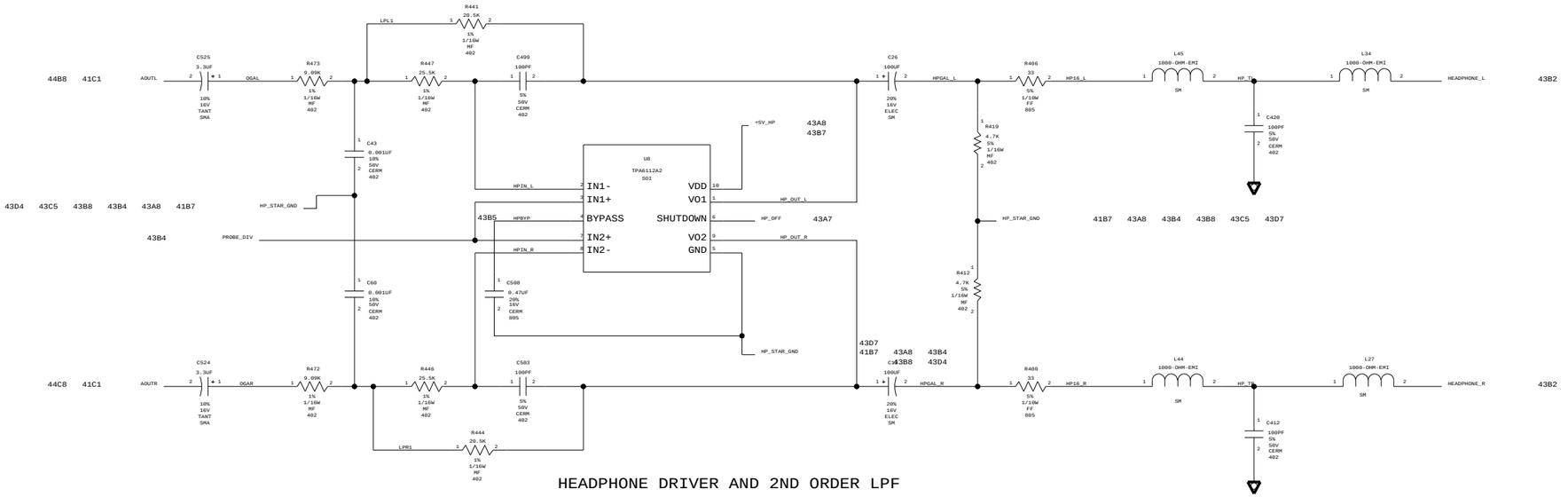

HEADPHONE DRIVER AND 2ND ORDER LPF

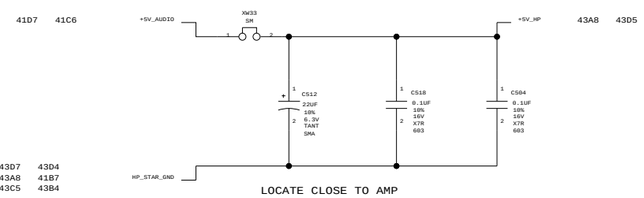

LOCATE CLOSE TO AMP

POWER SOURCE

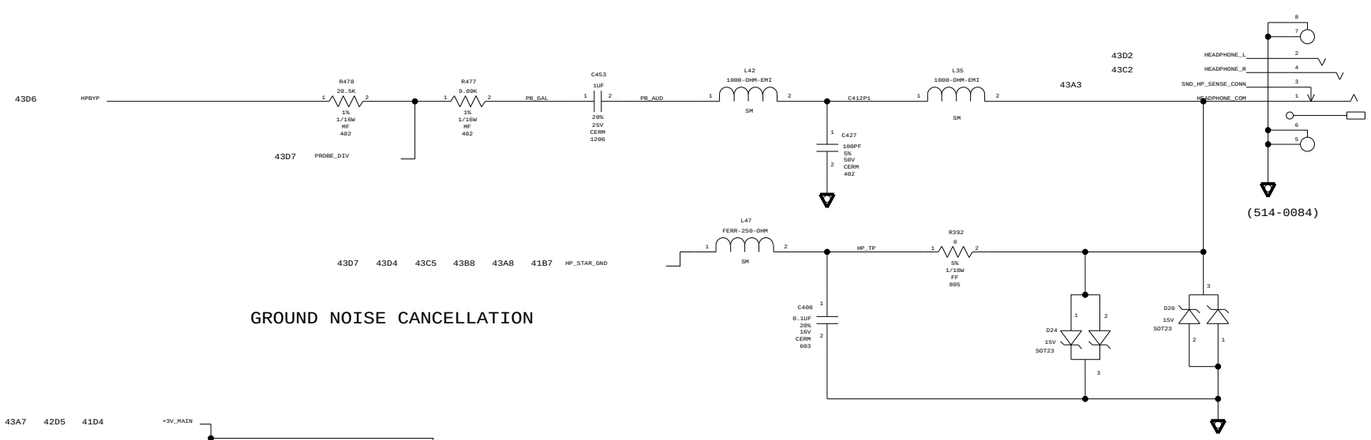

GROUND NOISE CANCELLATION

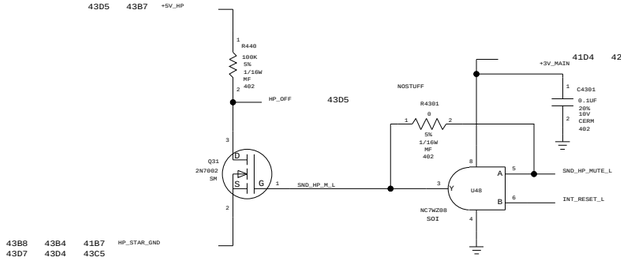

MUTE & SHUTDOWN

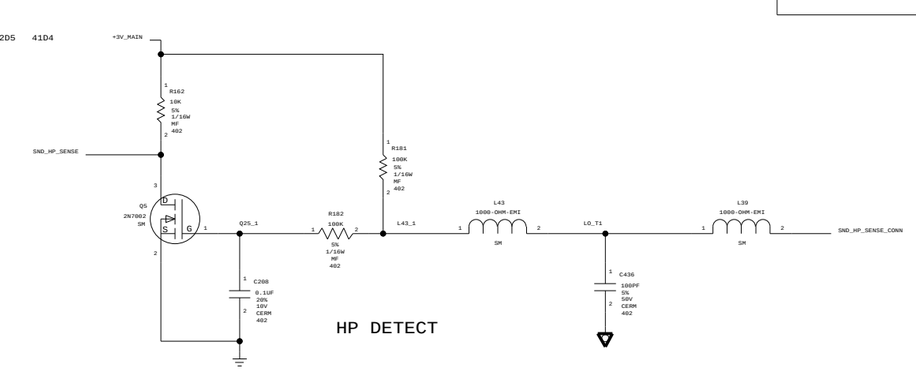

HP DETECT

HEADPHONE OUT AMP

NOTICE OF PROPRIETARY PROPERTY

LAST MODIFIED=Wed May 28 20:23:52 2003

THE INFORMATION CONTAINED HEREIN IS THE PROPRIETARY PROPERTY OF APPLE COMPUTER, INC. THE POSSESSOR AGREES TO THE FOLLOWING

I TO MAINTAIN THE DOCUMENT IN CONFIDENCE

II NOT TO REPRODUCE OR COPY IT

III NOT TO REVEAL OR PUBLISH IN WHOLE OR PART

APPLE COMPUTER INC.

SIZE	DRAWING NUMBER	REV.
D	051-6490	A
SCALE: NONE	SHT 43 OF 74	

DRAWING

CR-44

8	7	6	5	4	3	2	1

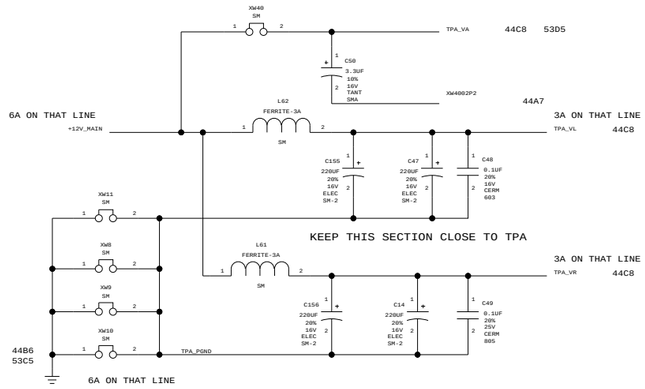

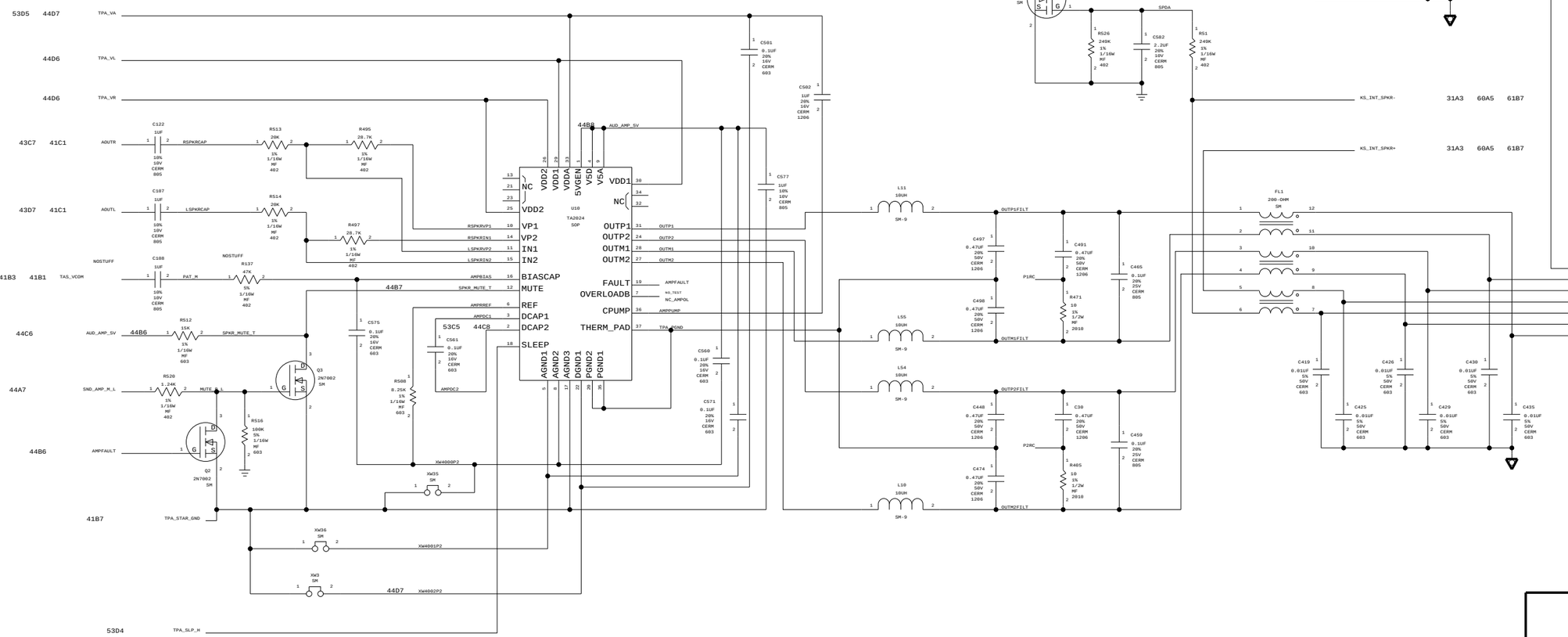

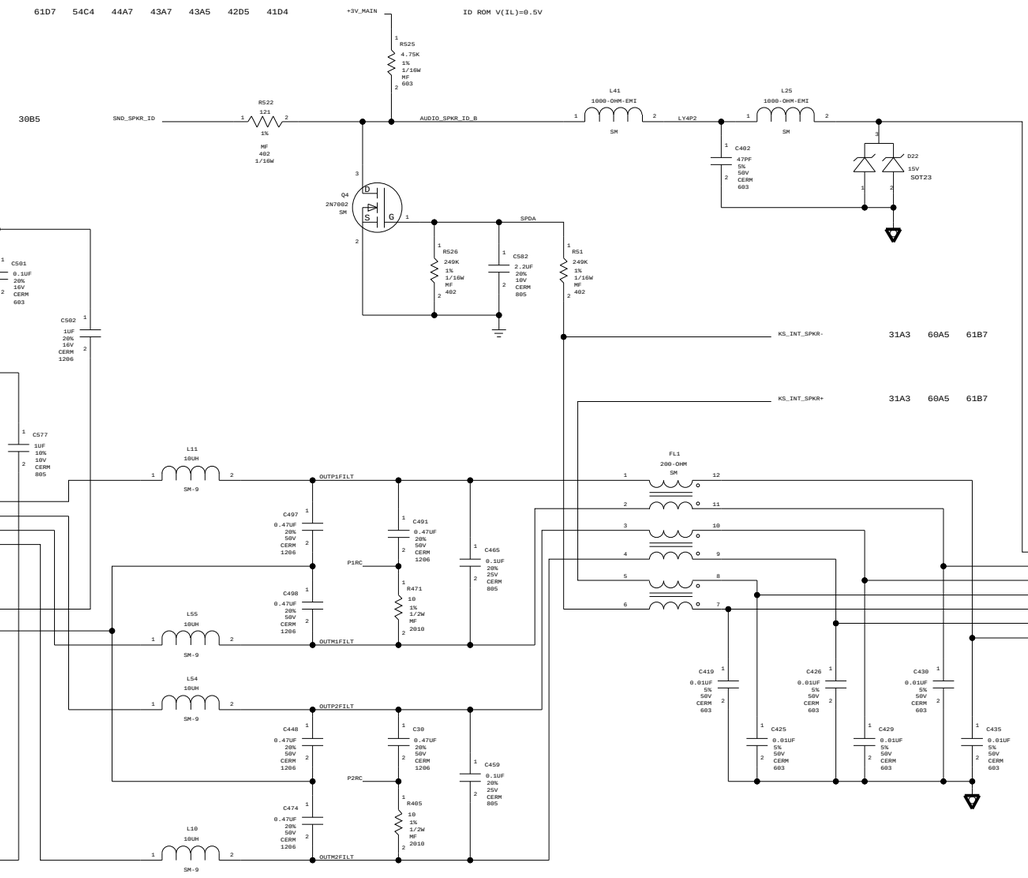

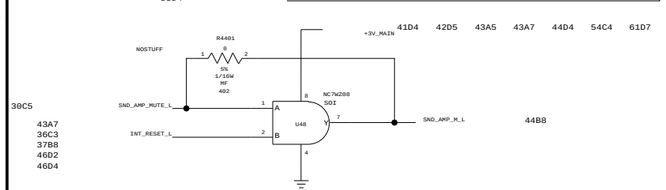

SPEAKER AMP

NOTICE OF PROPRIETARY PROPERTY

LAST MODIFIED=Wed May 28 20:23:53 2003
THE INFORMATION CONTAINED HEREIN IS THE PROPRIETARY PROPERTY OF APPLE COMPUTER, INC. THE POSSESSOR AGREES TO THE FOLLOWING

I TO MAINTAIN THE DOCUMENT IN CONFIDENCE

II NOT TO REPRODUCE OR COPY IT

III NOT TO REVEAL OR PUBLISH IN WHOLE OR PART

APPLE COMPUTER INC.

SIZE	DRAWING NUMBER	REV.
D	051-6490	A
SCALE: NONE	SHT 44 OF 74	

DRAWING

CR:45

518S0008

45C2 42C3 41D7 41D6 41D2

+3V_AUDIO — R4507 33R 1/16W 5% MF 402 — MIC_FIX

NEEDED FOR MIC NOISE

J4501 DF13B-4P-1.25V F-ST-SM — NOSTUFF

J4502 DF13B-4P-1.25V F-ST-SM — NOSTUFF

45B5 45C6 45B6

C4502 22UF 20% 10V TANT SMB

R421 2.2K 5% 1/16W MF 402

C542 100PF 5% 50V CERM 402

C556 0.1UF 20% 16V CERM 603

C551 0.1UF 20% 16V CERM 603

C535 2.2UF 20% 10V CERM 805

R488 2.2K 5% 1/16W MF 402

R489 120K 5% 1/16W MF 402

R414 330 5% 1/16W MF 402

R413 47K 5% 1/16W MF 402

C478 470PF 10% 50V CERM 402

U13 TLV2362 SOI

U13 TLV2362 SOI

R498 47K 5% 1/16W MF 402

C550 1UF 10% 6.3V CERM 603

Q33 2N3904 SM

61A7 60A5 31A5 — MICHIGH — L79 1000-OHM-EMI SM — MICFH — C642 47PF 5% 50V CERM 402

45C6 — R4501 0 5% 1/16W MF 402 — JAZ — R4504 0 5% 1/16W MF 402 — MIH — L60 1000-OHM-EMI SM — MICHFILT

MIC1 MIC2 MIC3 MIC4 — MIC_IN — 41C4

+3V_AUDIO — 41D2 41D6 41D7 42C3 45D5

61A7 60A5 31A5 — MICLOW — L81 1000-OHM-EMI SM — MICFL — C675 47PF 5% 50V CERM 402

45C6 — R4502 0 5% 1/16W MF 402 — ASH — R4505 0 5% 1/16W MF 402 — MIL — LS9 1000-OHM-EMI SM

41B4 — VREFP

MICS

61A7 60A5 31A5 — MICSHLD — L83 1000-OHM-EMI SM — MICSSS1

R4503 0 5% 1/16W MF 402 — KAVAN — R4506 0 5% 1/16W MF 402 — MIS — R487 0 5% 1/16W MF 402

42B3 — OPA_VREF — 42C2 41D6 41A7 — OPA_STAR_GND

PLACE R4501, R4502 AND R4503 NEAR AUDIO

PLACE R4504, R4505 AND R4506 NEAR KITCHENSINK

MIC PREAMP

NOTICE OF PROPRIETARY PROPERTY

LAST MODIFIED=Wed May 28 20:23:54 2003
THE INFORMATION CONTAINED HEREIN IS THE PROPRIETARY PROPERTY OF APPLE COMPUTER, INC. THE POSSESSOR AGREES TO THE FOLLOWING

I TO MAINTAIN THE DOCUMENT IN CONFIDENCE

II NOT TO REPRODUCE OR COPY IT

III NOT TO REVEAL OR PUBLISH IN WHOLE OR PART

APPLE COMPUTER INC.

SIZE	DRAWING NUMBER	REV.
D	051-6490	A

SCALE	SHT	OF
NONE	45	74

DRAWING

CR-46

PMU SUPPORT

PART NUMBER	QTY	DESCRIPTION	REFERENCE DES	CRITICAL	BOM OPTION
341S1008	1	PMU,M16C62,64KB,PRMGD	U26		
116S1203	1	RES,MF,2K-OHM,1/16W,402	R690		VGER_GOOD
116S1103	1	RES,MF,1K-OHM,1/16W,402	R690		VGER_FIX
525-0057	1	CONN,BATTERY HOLDER	BT1		

PMU NOT RATED STRONG ENOUGH FOR 1K

MAIN RAIL, TO PREVENT LEAKAGE INTO UNPOWERED DEVICES

LOCATE NEAR TO PMU

PMU POWER MGR

NOTICE OF PROPRIETARY PROPERTY

LAST MODIFIED=Wed May 28 20:23:56 2003
THE INFORMATION CONTAINED HEREIN IS THE PROPRIETARY PROPERTY OF APPLE COMPUTER, INC. THE POSSESSOR AGREES TO THE FOLLOWING

I TO MAINTAIN THE DOCUMENT IN CONFIDENCE

II NOT TO REPRODUCE OR COPY IT

III NOT TO REVEAL OR PUBLISH IN WHOLE OR PART

APPLE COMPUTER INC.

SIZE	DRAWING NUMBER	REV.
D	051-6490	A
SCALE: NONE	SHT 46 OF 74	

DRAWING

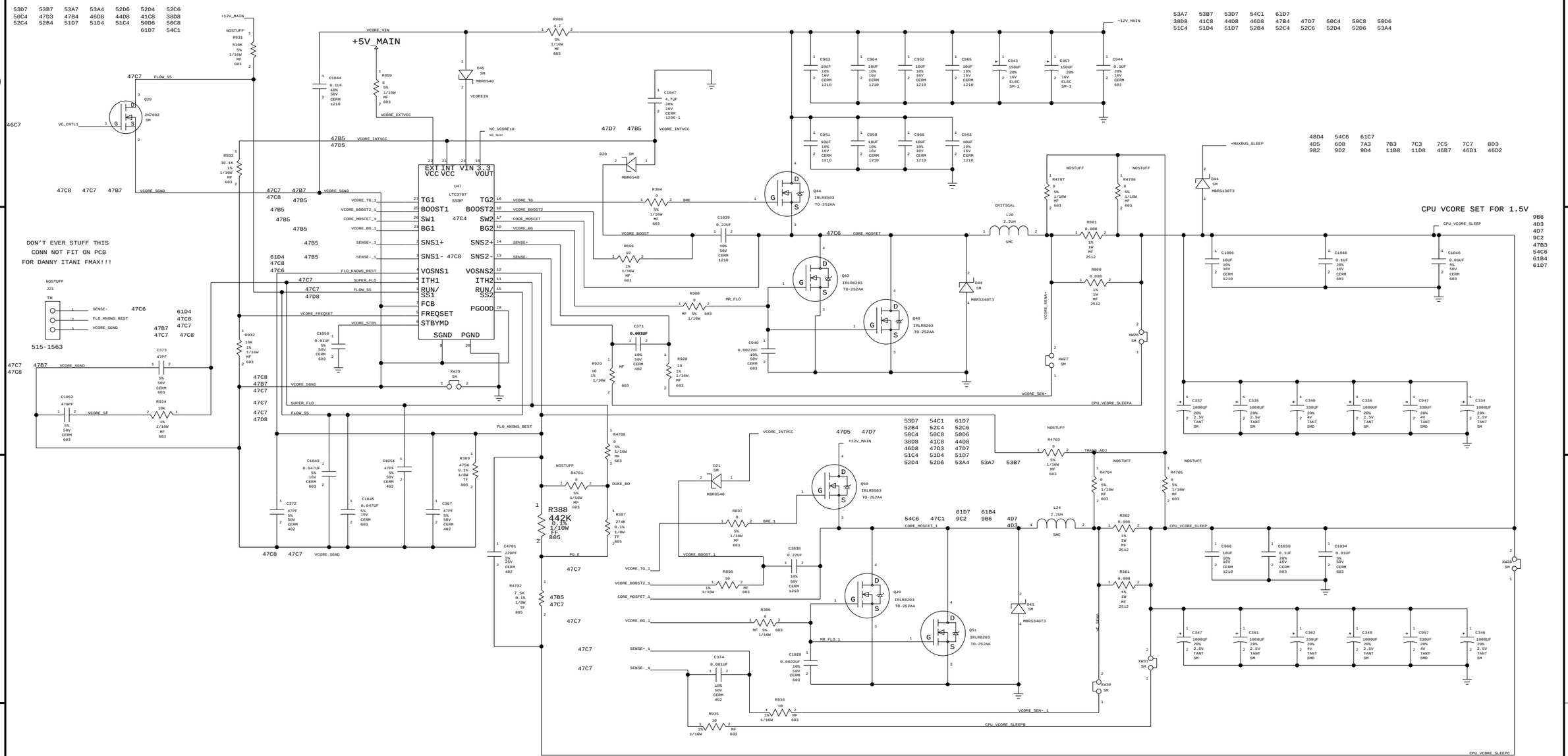

KUMA SERVER(1):HARDWARE:KUMA DESIGNS:KUMA POWER SUPPLIES:VCORE WITH AVP TABLES

PART NUMBER	ALTERNATE FOR PART NUMBER	REFERENCE DESIGNATOR(S)	DESCRIPTION	BOM OPTION
128S0018	128S0012	C340,C362,C947,C957	330UF,2.5V,TANT	

CPU & AGP VREGS

NOTICE OF PROPRIETARY PROPERTY

LAST MODIFIED=Wed May 28 20:23:57 2003
THE INFORMATION CONTAINED HEREIN IS THE PROPRIETARY PROPERTY OF APPLE COMPUTER, INC. THE POSSESSOR AGREES TO THE FOLLOWING

I TO MAINTAIN THE DOCUMENT IN CONFIDENCE

II NOT TO REPRODUCE OR COPY IT

III NOT TO REVEAL OR PUBLISH IN WHOLE OR PART

APPLE COMPUTER INC.

SIZE	DRAWING NUMBER	REV.
D	051-6490	A
SCALE: NONE	SHT 47 OF 74	

DRAWING

CR-48

INTREPID MAXBUS & CPU OVDD POWER CONVERTER

(OFF DURING SLEEP)

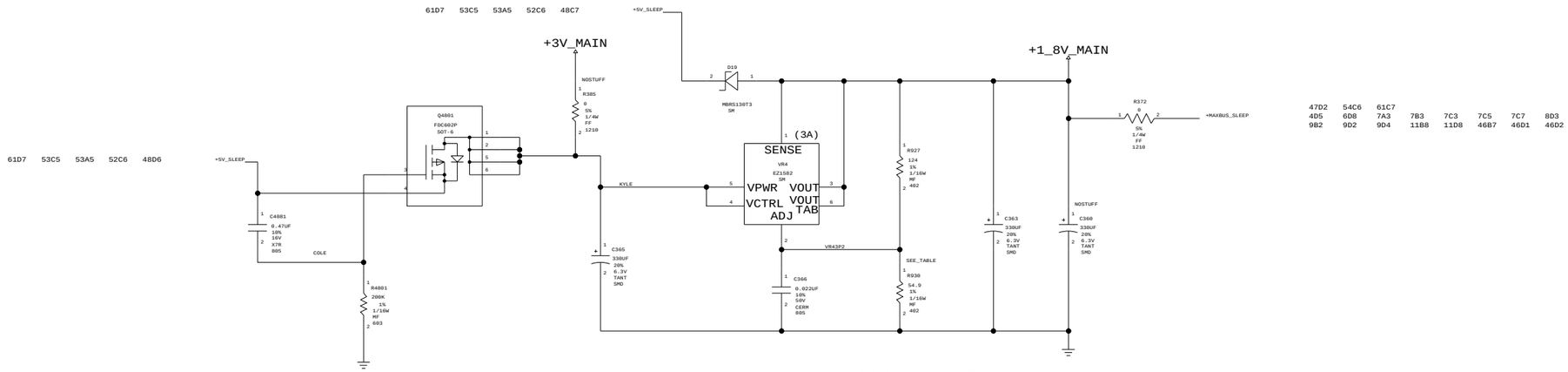

MAXBUS I/O SUPPLY SUPPORT

PART NUMBER	QTY	DESCRIPTION	REFERENCE DES	CRITICAL	BOM OPTION
114S2491	1	RES,FF,24.9-OHM,1%	R930		MAXIO_1'50V
114S3481	1	RES,FF,34.8-OHM,1%	R930		MAXIO_1'65V
114S4421	1	RES,FF,44.2-OHM,1%	R930		MAXIO_1'70V
114S5491	1	RES,FF,54.9-OHM,1%	R930		MAXIO_1'80V

*

AGP I/O POWER CONVERTER

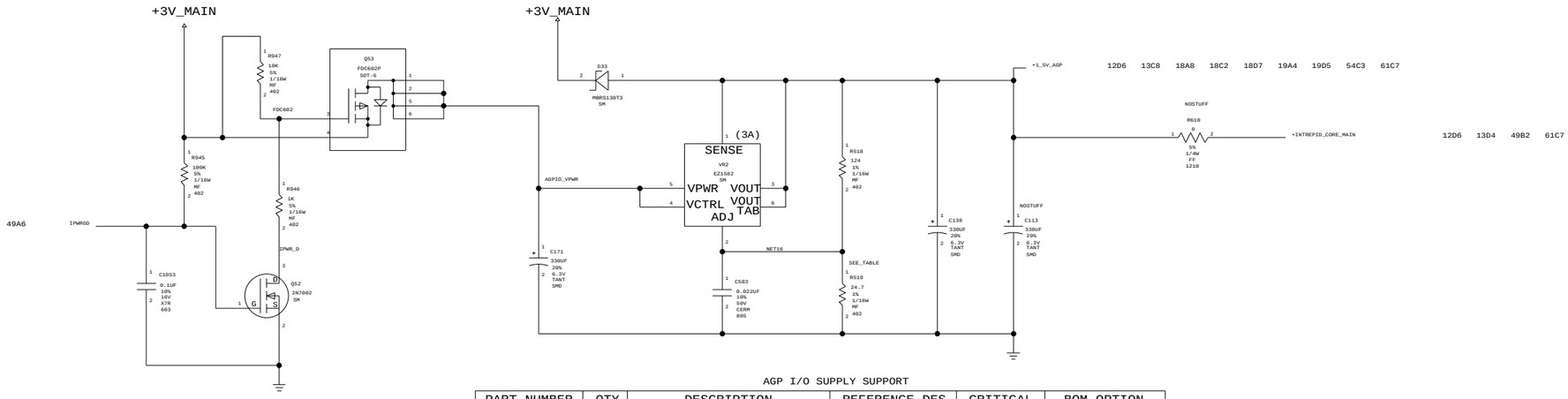

AGP I/O SUPPLY SUPPORT

PART NUMBER	QTY	DESCRIPTION	REFERENCE DES	CRITICAL	BOM OPTION
114S2491	1	RES,FF,24.9-OHM,1%	R519		AGPIO_1'50V
114S3481	1	RES,FF,34.8-OHM,1%	R519		AGPIO_1'65V
114S4421	1	RES,FF,44.2-OHM,1%	R519		AGPIO_1'70V
114S5491	1	RES,FF,54.9-OHM,1%	R519		AGPIO_1'80V

*

CPU & AGP VREGS

NOTICE OF PROPRIETARY PROPERTY

LAST_MODIFIED=Wed May 28 20:23:58 2003
THE INFORMATION CONTAINED HEREIN IS THE PROPRIETARY PROPERTY OF APPLE COMPUTER, INC. THE POSSESSOR AGREES TO THE FOLLOWING

I TO MAINTAIN THE DOCUMENT IN CONFIDENCE

II NOT TO REPRODUCE OR COPY IT

III NOT TO REVEAL OR PUBLISH IN WHOLE OR PART

APPLE COMPUTER INC.

SIZE	DRAWING NUMBER	REV.
D	051-6490	A

SCALE	SHT	OF
NONE	48	74

DRAWING

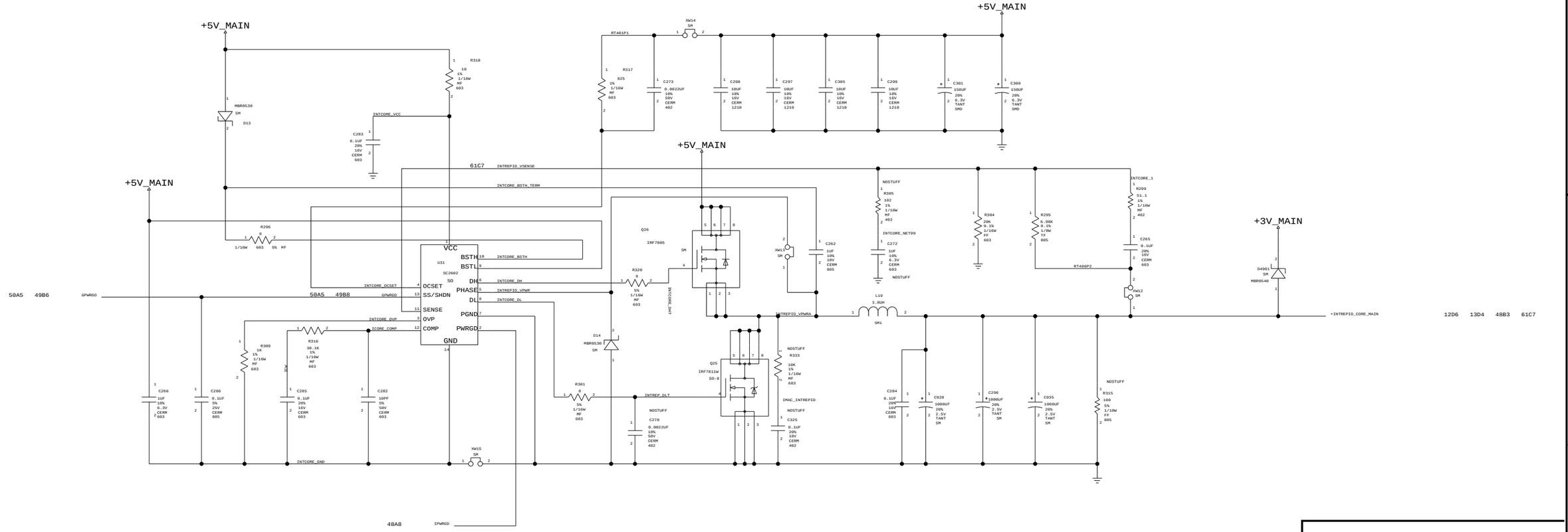

TABLES FOR INTREPID CORE RESISTOR VALUES TO VOLTAGES ARE LOCATED AT
KUMA SERVER(1):HARDWARE:KUMA DESIGNS;KUMA POWER SUPPLIES;ICORE R TOLERANCE

INTREPID CORE

NOTICE OF PROPRIETARY PROPERTY

LAST_MODIFIED=Wed May 28 20:23:59 2003
THE INFORMATION CONTAINED HEREIN IS THE PROPRIETARY PROPERTY OF APPLE COMPUTER, INC. THE POSSESSOR AGREES TO THE FOLLOWING

I TO MAINTAIN THE DOCUMENT IN CONFIDENCE

II NOT TO REPRODUCE OR COPY IT

III NOT TO REVEAL OR PUBLISH IN WHOLE OR PART

APPLE COMPUTER INC.

SIZE	DRAWING NUMBER	REV.
D	051-6490	A

SCALE	SHT	OF
NONE	49	74

DRAWING

CR-50

61D7 54C1 53D7 53B7 53A7 53A4 52D6
50C4 47D7 47D3 47B4 46D8 44D8 41C8 38D8
52D4 52C6 52C4 52B4 51D7 51D4 51C4 50C8

+12V_MAIN

R523 10 1% 1/16W MF 603

D30 MBR0530 SM

GCORE_VCC

C589 0.1UF 20% 16V CERM 603

R505 20 1% 1/16W MF 603

GCORE_BSTH_TERM

+12V_MAIN

C220 150UF 20% 16V ELEC SM-1

C237 150UF 20% 16V ELEC SM-1

C634 10UF 10% 16V CERM 1210

C633 10UF 10% 16V CERM 1210

C631 10UF 10% 16V CERM 1210

C632 10UF 10% 16V CERM 1210

XW7 SM

RB37P1

C596 330PF 10% 50V CERM 603

R529 1K 1% 1/16W MF 603

50B6

GCORE_VSENSE

R504 20K 1% 1/16W MF 603

NOSTUFF R493 51.1 1% 1/16W MF 603

GCORE_2

NOSTUFF C557 2.2UF 20% 10V CERM 805

R499 5.23K 1% 1/16W MF 603

R496 51.1 1% 1/16W MF 402

GCORE_1

C564 0.1UF 20% 16V CERM 603

RB22P2

XW2 SM

+2_5V_MAIN

D34 SM MBRS130T3

51B5 50B6 MPWRGD

51B5 50B7 MPWRGD

50C2

GCORE_OCSET
GCORE_VSENSE
GCORE_OVP
GCORE_COMP

U40 SC2602

VCC	1	
BSTH	10	GCORE_BSTH
BSTL	9	(+12V_MAIN)
SO	16	
DH	6	GCORE_DH
PHASE	5	GRAPHICS_VPWR
DL	8	GCORE_DL
PGND	7	
PWRGD	2	
GND	14	
OCSET	4	
SS/SHDN	13	
SENSE	11	
OVP	3	
COMP	12	

R527 1K 1% 1/16W MF 603

R503 3.92K 1% 1/16W MF 603

RB27-1

C563 100PF 5% 50V CERM 603

C572 0.1UF 5% 25V CERM 805

C552 0.1UF 20% 16V CERM 603

GCORE_GND

GRAPHICS CORE IS SET TO 1.65V

53D7 53B7 53A7
52C6 52C4 52B4
50D6 50C8 47D7
44D8 41C8 38D8
47D3 47B4 46D8
51D7 51D4 51C4
53A4 52D6 52D4
61D7 54C1

+12V_MAIN

Q9 IRLR8503 TO-252AA

R150 0 5% 1/16W MF 603

QT2P1

XW6 SM

D32 SM MBR0530

QT2P3

Q8 IRLR8503 TO-252AA

NOSTUFF

C585 0.1UF 20% 16V CERM 603

Q7 IRLR8203 TO-252AA

RS15 0 5% 1/16W MF 603

QT1P1

XW39 SM

NOSTUFF Q34 IRLR8203 TO-252AA

NOSTUFF C586 0.0022UF 10% 50V CERM 402

C576 0.1UF 20% 25V CERM 603

L12 2.2UH SMC

D31 SM MBRS340T3

C543 0.1UF 20% 16V CERM 603

C528 1000UF 20% 2.5V TANT SM

C106 1000UF 20% 2.5V TANT SM

C558 1000UF 20% 2.5V TANT SM

C132 1000UF 20% 2.5V TANT SM

C59 1000UF 20% 2.5V TANT SM

C88 1000UF 20% 2.5V TANT SM

C71 1000UF 20% 2.5V TANT SM

GRAPH_CORE

NOSTUFF R47S 100 5% 1/10W FF 805

GRAPHICS CORE SUPPLY 1.6V

49B6 49B8 GPWRGD

GRAPHICS CORE

NOTICE OF PROPRIETARY PROPERTY

LAST MODIFIED=Wed May 28 20:24:00 2003

THE INFORMATION CONTAINED HEREIN IS THE PROPRIETARY PROPERTY OF APPLE COMPUTER, INC. THE POSSESSOR AGREES TO THE FOLLOWING

I TO MAINTAIN THE DOCUMENT IN CONFIDENCE

II NOT TO REPRODUCE OR COPY IT

III NOT TO REVEAL OR PUBLISH IN WHOLE OR PART

APPLE COMPUTER INC.

SIZE	DRAWING NUMBER	REV.
D	051-6490	A

SCALE	SHT	OF
NONE	50	74

DRAWING

CR-51

MAIN MEMORY DDR AND FRAME BUFFER POWER CONVERTER (2.50VDC)

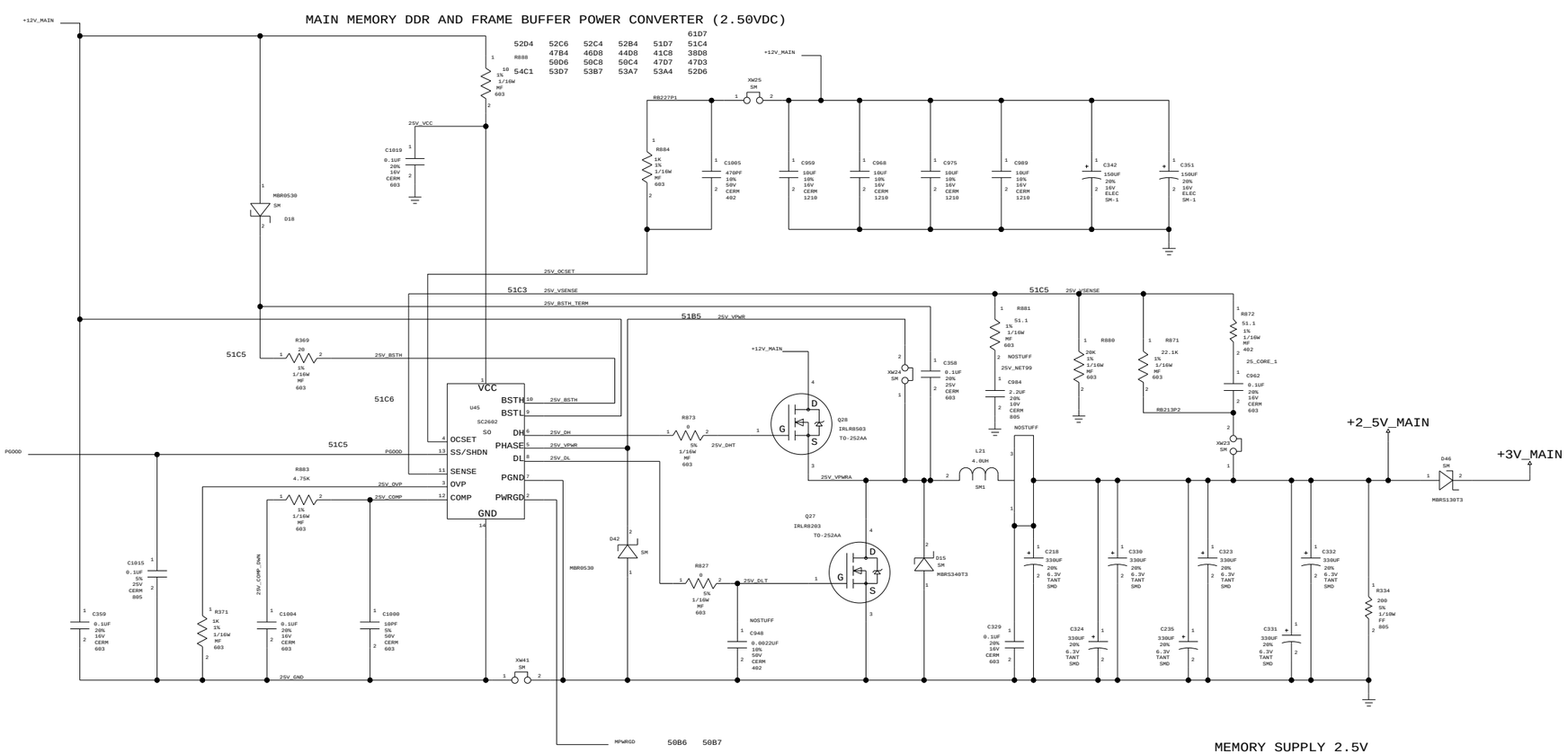

MEMORY SUPPLY 2.5V

MEMORY PS

NOTICE OF PROPRIETARY PROPERTY

LAST MODIFIED=Wed May 28 20:24:01 2003
THE INFORMATION CONTAINED HEREIN IS THE PROPRIETARY PROPERTY OF APPLE COMPUTER, INC. THE POSSESSOR AGREES TO THE FOLLOWING

I TO MAINTAIN THE DOCUMENT IN CONFIDENCE

II NOT TO REPRODUCE OR COPY IT

III NOT TO REVEAL OR PUBLISH IN WHOLE OR PART

APPLE COMPUTER INC.

SIZE	DRAWING NUMBER	REV.
D	051-6490	A

SCALE	SHT	OF
NONE	51	74

DRAWING

CR-52

DC/DC CONVERTER

NOTICE OF PROPRIETARY PROPERTY

LAST MODIFIED=Wed May 28 20:24:03 2003

THE INFORMATION CONTAINED HEREIN IS THE PROPRIETARY PROPERTY OF APPLE COMPUTER, INC. THE POSSESSOR AGREES TO THE FOLLOWING

I TO MAINTAIN THE DOCUMENT IN CONFIDENCE

II NOT TO REPRODUCE OR COPY IT

III NOT TO REVEAL OR PUBLISH IN WHOLE OR PART

APPLE COMPUTER INC.

SIZE	DRAWING NUMBER	REV.
D	051-6490	A

SCALE	SHT	OF
NONE	52	74

DRAWING

CR-53

+12V MAIN POWER SWITCH
(OFF DURING SLEEP)

61D7 54C1 53B7
52C4 52B4 51D7 51D4 51C4
47B4 46D8 44D8 41C8 38D8
50D6 50C8 50C4 47D7 47D3
53A7 53A4 52D6 52D4 52C6

+12V_MAIN
Q20 FDC602P SOT-6
R769 470K 5% 1/10W MF 402
C915 0.01UF CERM 10% 16V 402
C918 0.0022UF 10% 50V CERM 402
+12V_SLEEP
C269 47UF 20% 16V ELEC SM
SW12V_SLEEP
R770 100K 5% 1/16W MF 402
SW12V_SL
Q14 2N7002 SM
53B6
SLEEP_OFF_L
R739 0 5% 1/16W MF 402
61D4 53C1 53B7 52C8 52C4 41C8
PWR_UP

31A3 31A8 31C5 52D6 53A4 54C1 61D7

AUDIO SLEEP SWITCH
(OFF DURING SLEEP)

44D7 44C8
TPA_VA
RS07 1M 5% 1/16W MF 402
TPA_SLP_H
44A7
Q6 2N7002 SM
C590 0.1UF 20% 16V CERM 603
SLEEPA_OFF_L
RS30 0 5% 1/16W MF 402
44B6 44C8
TPA_PGND
PWR_UP

54B6 52C7

FIREWIRE POWER SWITCH

Fw_PWR
U35 IRF7410 SO-8
Fw_PWR_SW
38D6 54B6
C19 47UF 20% 16V ELEC SM
C18 0.01UF CERM 5% 50V 603
Q42P4
C473 0.0022UF 10% 50V CERM 402
+5V_MAIN
R23 470K 5% 1/16W MF 603
R21 100K 5% 1/16W MF 603
Q1P3
R22 10K 1% 1/16W MF 603
Q1P1
Q1 2N7002 SM

61D4 41C8 52C4 52C8 53B7 53C1 53C7
PWR_UP

+5V POWER SWITCH
(OFF DURING SLEEP)

+5V_MAIN
Q37 FDC602P SOT-6
+5V_SLEEP
48C7 48D6 52C6 53A5 61D7
C742 0.01UF CERM 10% 16V 402
C773 0.0022UF 10% 50V CERM 402
C238 150UF 20% 6.3V TANT SMD
SWITCH5V_4
SWITCH5V_3
R645 470K 5% 1/16W MF 402
R664 100K 1% 1/16W MF 402
Q38 2N7002 SM
61D4 53C7 53C1 52C8 52C4 41C8
PWR_UP
53C7
R685 0 5% 1/16W MF 402
SLEEP_OFF_L
LED_RET
31A3 54B3
Q17 2N7002 SM
CPU_SLEEPIN
Q15 2N7002 SM
+12V_MAIN
R738 4.7K 5% 1/16W MF 402
Q16 2N7002 SM
61D4 46C7
POWER_UP*

52C6 48D6 48C7 61D7 53C5
+3V_MAIN
DEV
R302 330 5% 1/16W MF 402
SLEEPLED_TERM
DS6 GREEN SM
SLEEP_LED_BD
R741 47K 5% 1/16W MF 402
Q19 2N7002 SM
SLEEP LED

52D6 52D4 52C6 52C4 52B4 51D7
47D3 47B4 46D8 44D8 41C8 38D8
51D4 51C4 50D6 50C8 50C4 47D7
61D7 54C1 53D7 53B7 53A4
+12V_MAIN
R740 10K 5% 1/16W MF 402
SLEEP2
R751 0 5% 1/16W MF 402
CPU_STATE_LED*
SLEEP1
Q18 2N7002 SM

+5V POWER, SLEEP & TESTPOINT LEDS
(TESTPOINT LED IS USED TO FOR SERVICE AND
IF NOT ILLUMINATED, TELLS USER ITS OK TO ADD MEMORY)

+5V_SLEEP
DEV
R300 330 5% 1/16W MF 402
RUNLED1
DS5 GREEN SM
+5V POWER LED

46D6
BT1
NOSTUFF
R615 0 5% 1/16W MF 402
+5V_MAIN
+12V_MAIN
+12V_SLEEP
R607 0 5% 1/16W MF 402
R609 0 5% 1/16W MF 402
R608 0 5% 1/16W MF 402
RT373P1
R612 787 1% 1/16W MF 603
PWR_LED
BT1_LED
R614 470 5% 1/16W MF 402
DS10 RED SM
JA21 TH-TP50
A

53A7 53B7 53D7 54C1 61D7
50D6 51C4 51D4 51D7 52B4 52C4 52C6 52D4 52D6
38D8 41C8 44D8 46D8 47B4 47D3 47D7 50C4 50C8
31A3 31A8 31C5 52D6 53D6 54C1 61D7

TMDS POWER CONVERTER & SWITCH
(OFF DURING SLEEP)

VOLTAGE TO SUPPORT 3.3V AT PANEL
VOLTAGE HERE WILL EXCEED 3.3V

Q11 FDC602P SOT-6
+3.3VFPD
26D6 54B6
RS301 0 5% 1/16W MF 402 NOSTUFF
3_6V_SLEEP
39D1
C254 22UF 20% 10V CERM 1210
3_5_HONKER
CRITICAL
+5V_MAIN
SENSE
VR3 EZ1582 SM
VPWR VOUT
VCTRL VOUT
ADJ TAB
HONK_ADJ
C653 10UF 10% 16V CERM 1210
C654 10UF 10% 16V CERM 1210
C236 0.022UF 10% 50V CERM 805
R601 182 1% 1/16W MF 402
R251 102 1% 1/16W MF 402
C246 150UF 20% 6.3V TANT SMD
C257 0.01UF CERM 10% 16V 402
C252 0.0022UF 10% 50V CERM 402
SWITCH5V_6
R278 100K 1% 1/16W MF 402
R277 10K 5% 1/16W MF 402
R279 10K 5% 1/16W MF 402
NOSTUFF
C258 0.01UF 20% 16V CERM 402
TMDS_EN
25C6
53B1 SWITCH5V_5
SWITCH5V_5
53B3

FPD_PWR_ON
R283 0 5% 1/16W MF 402
FPD_PWR_ON_T
Q13 2N7002 SM
R284 100K 1% 1/16W MF 402

GENERAL POWER LED
(NOT ILLUMINATED = OK TO ADD MEMORY)

+5V/+12V, AUDIO
FW & TMDS PWR

NOTICE OF PROPRIETARY PROPERTY
LAST MODIFIED=Wed May 28 20:24:04 2003
THE INFORMATION CONTAINED HEREIN IS THE PROPRIETARY PROPERTY OF APPLE COMPUTER, INC. THE POSSESSOR AGREES TO THE FOLLOWING
I TO MAINTAIN THE DOCUMENT IN CONFIDENCE
II NOT TO REPRODUCE OR COPY IT
III NOT TO REVEAL OR PUBLISH IN WHOLE OR PART

APPLE COMPUTER INC.

SIZE	DRAWING NUMBER	REV.
D	051-6490	A
SCALE: NONE	SHT 53 OF 74	

DRAWING

CR-54

CLOCK POWER CONSTRAINT TABLE

SIG_NAME	MIN_NECK_WIDTH	VOLTAGE	MIN_LINE_WIDTH	
+2_5V_DDR_AVDD	10	2.5	20	10D4
+2_5V_DDR_VDD	10	2.5	20	10D5
+3V_INTSS_AVDD	10	3.3	20	10B7
+3V_INTSS_VDD	10	3.3	20	10B6
PCK2059_VDDI2C	10	2.5	20	10D4

CPU POWER CONSTRAINT TABLE

SIG_NAME	MIN_NECK_WIDTH	VOLTAGE	MIN_LINE_WIDTH	
+MAXBUS_SLEEP	10	1.8	20	4D5 6D8 7A3 7B3 7C3 7C5 7C7 8D3 9B2 9D2 9D4
CPU_AVDD	10	1.85	20	4D3 11B8 11D8 46B7 46D1 46D2 47D2 48D4 61C7
CPU_VCORE_SLEEP	10	1.85	20	4D3 4D7 9B6 9C2 47B3 47C1 61B4 61D7

ETHERNET POWER CONSTRAINT TABLE

SIG_NAME	MIN_NECK_WIDTH	VOLTAGE	MIN_LINE_WIDTH	
+2.5V_ENET	10	2.5	20	37C3 37D3 37D5

FIREWIRE POWER CONSTRAINT TABLE

SIG_NAME	MIN_NECK_WIDTH	VOLTAGE	MIN_LINE_WIDTH	
FW_DIO_V	10	3.3	20	38B6
FW_DIODE_BYPASS_V	10	3.3	20	38B6 38B7
FW_PWR	10	24	20	52C7 53D3
FW_PWR_SW	10	24	20	38D6 53D1
FW_PHY_3_3	10	3.3	20	38B5 38B7 38D7
FW_VGND	10	0	20	38D1
FW_VP	10	12	20	38D5
FW_VP1	10	12	20	38D1 38D3
FW_VP2	10	12	20	38C1 38D3
FW_VP_1	10	12	20	38D4
FW_VP_2	10	12	20	38D4

GRAPHICS POWER CONSTRAINT TABLE

SIG_NAME	MIN_NECK_WIDTH	VOLTAGE	MIN_LINE_WIDTH	
+3.3VFPD	10	3.6	20	26D6 53C1
DAC2VDD	10	3.3	20	24C5
DACVDD	10	3.3	20	24C4
DDC_VCC_3	10	3.3	20	26A5 26B3 61B7
DDC_VCC_5	10	5	20	27C4 61B7
DDR_VREF	10	1.25	20	16B2 16D1 16D8 17D8
IFPBAVCC	10	3.8	20	25A6 25B4
IFPDVREF	10	3.8	20	25B4
INT_TMDS_3V	10	3.6	20	26B3 26C3 26C4 26D5 61C7
GPU_AGP_VREF	10	0.75	20	19A3 19A8
GPU_FB_VREF	10	1.25	20	20C8
GRAPH_CORE	10	1.6	20	19D5 25C4 25C6 50B1
NVPLLVDD	10	3.3	20	24D5
SGRAVREF	10	1.25	20	22A3 22C4 22C8
SGRBVREF	10	1.25	20	23A3 23C4 23C8

GPU_SBPULLUP	1.5	19A5
GPU_SBPULLDWN	0	19A5
GPU_TMODE	0	19A5

GPU_XTALSSIN	0	24B4
VIPCLK	0	24D4

CSLOT_IOWAIT_L	3.3	39B7
EIDE_CSELP_L	0	40C6
EIDE_IOCS16_L	5	40C6
UIDE_CSELP_L	0	40C2
UNUSED_ATAIOCS16_L	5	40C2

INTREPID POWER CONSTRAINT TABLE

SIG_NAME	MIN_NECK_WIDTH	VOLTAGE	MIN_LINE_WIDTH	
+1_5V_INTREPID_PLL	10	1.5	20	11D3 18D6 30D6 32D5
+1_5V_INTREPID_PLL1	10	1.5	20	30C4
+1_5V_INTREPID_PLL2	10	1.5	20	30D4
+1_5V_INTREPID_PLL3	10	1.5	20	30D4
+1_5V_INTREPID_PLL4	10	1.5	20	30D4
+1_5V_INTREPID_PLL5	10	1.5	20	18D5
+1_5V_INTREPID_PLL6	10	1.5	20	32D4
+1_5V_INTREPID_PLL7	10	1.5	20	11D2
+1_5V_INTREPID_PLL8	10	1.5	20	30D4
+1_5V_AGP	10	1.5	20	12D6 13C8 18A8 18C2 18D7 19A4 19D5 48B4 61C7
INT_AGP_VREF	10	0.75	20	18A7 18C6

MAIN POWER CONSTRAINT TABLE

SIG_NAME	MIN_NECK_WIDTH	VOLTAGE	MIN_LINE_WIDTH
+1_8V_MAIN	10	1.8	20
+2_5V_MAIN	10	2.5	20
+3V_MAIN	10	3.3	20
3.8V_TRICKLE	10	3.8	20
+5V_MAIN	10	5	20
+12V_MAIN	10	12	20
+12V_SLEEP	10	12	20
GND	10	0	20
AGND	10	0	20
ANALOGGND	10	0	20
ALTCHGND	10	0	20
CHGND	10	0	20

+1_8V_MAIN 61D7 54C1 53D7 53B7 53A7 53A4 52D6 52D4
+2_5V_MAIN 46C2 46C6 46D7 52D6 54C2 52C6 51D7 50D6 50D8 46D8 53D6 31A8 52D6 54C1 61D7
+3V_MAIN 46C2 46C6 46D7 52D6 54C1 52B4 51C4 47D7 50C4 38D8 41C8 47B4 47D3 53A4 53B6 31A3 31A8 31C5 52D6 54C1
+5V_MAIN 46C2 46C6 46D7 52D6 54C1 52B4 51C4 47D7 50C4 50C8 38D8 41C8 44D8 46D8 47B4 47D3 53A4 53D6 31A3 31A8 31C5 52D6 54C1 61D7
3.8V_TRICKLE 46C2
+12V_MAIN 53A4 53D6 31A3 31A8 31C5 52D6 54C1 61D7
+12V_SLEEP 53A4

ALT CHASSIS

PMU POWER CONSTRAINT TABLE

SIG_NAME	MIN_NECK_WIDTH	VOLTAGE	MIN_LINE_WIDTH	
3.8VH_TRICKLE	10	3.8	20	46C1 46D7
PMU_AVCC	10	3.5	20	46B5 46D4 61C4
PMU_POWER	10	3.5	20	31C3 46A5 46B1 46C2 46D5

SYSTEM POWER CONSTRAINT TABLE

SIG_NAME	MIN_NECK_WIDTH	VOLTAGE	MIN_LINE_WIDTH	
+12VSO_FILT	10	12	20	31A5
FAN_12V_FILT	10	12	20	31A5 61C7
KSSVSO	10	5	20	31A5 61A7
LED_5V	10	5	20	31A8
LED_5V_FILT	10	5	20	31A5 61A7
LED_RET	10	0	20	31A3 53B6
LED_RET_FILT	10	0	20	31A5 61A7

USB POWER CONSTRAINT TABLE

SIG_NAME	MIN_NECK_WIDTH	VOLTAGE	MIN_LINE_WIDTH	
+3V_INTREPID_USB	10	3.3	20	30C4
NEC_AVDD	10	3.3	20	34D5
USB_GND	10	0	20	35A4 35B3 35C3 35D3
USB_PORT_PWR	10	5	20	35A4 35B3 35C3 35D3
USB_PWR	10	5	20	61B4 27B5 27C2 27D3 35A6
USB_PWR_EN	10	0	20	

POWER CONSTRAINTS

NOTICE OF PROPRIETARY PROPERTY
LAST_MODIFIED=Wed May 28 20:12:58 2003
THE INFORMATION CONTAINED HEREIN IS THE PROPRIETARY PROPERTY OF APPLE COMPUTER, INC. THE POSSESSOR AGREES TO THE FOLLOWING
I TO MAINTAIN THE DOCUMENT IN CONFIDENCE
II NOT TO REPRODUCE OR COPY IT
III NOT TO REVEAL OR PUBLISH IN WHOLE OR PART

APPLE COMPUTER INC.
SIZE D | DRAWING NUMBER 051-6490 | REV. A
SCALE NONE | SHT 54 OF 74
DRAWING

CR-55

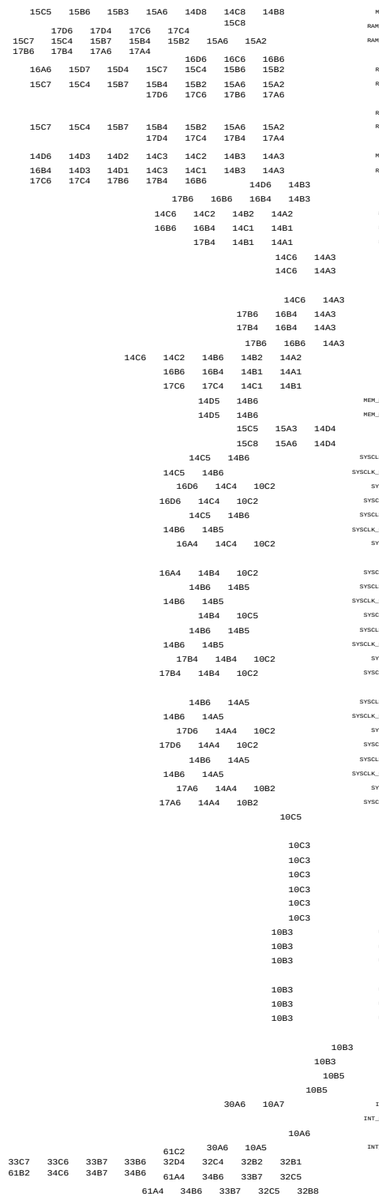

SIG_NAME	RATSNEST_SCHEDULE MATCHED_DELAY	MAX_VIAS	DELAY_RULE	STUB_LENGTH	MIN_NECK_WIDTH NET_SPACING_TYPE	MAX_EXPOSED_LENGTH	NO_TEST	FUNC_TEST	PULSE_PARAM
MEM_DATA<0..63>	MEM_GROUP0:::150	8	:::1300		3				167 MHZ
RAM_DATA_A<0..63>	RAM_GROUP0_A:::180	8	:::1800		3				167 MHZ
RAM_DATA_B<0..63>	RAM_GROUP0_B:::180	2	:::2400		3				167 MHZ
MEM_DQS<0..7>	MEM_GROUP0:::180	3	:::1300		3				167 MHZ
RAM_DQS_A<0..7>	RAM_GROUP0_A:::180	3	:::1700		3				167 MHZ
RAM_DQS_B<0..7>	RAM_GROUP0_B:::180	2	:::2400		3				167 MHZ
MEM_DQM<0..7>	MEM_GROUP0:::180	3	:::1300		3				167 MHZ
RAM_DQM_A<0..7>	RAM_GROUP0_A:::180	3	:::1800		3				167 MHZ
RAM_DQM_B<0..7>	RAM_GROUP0_B:::180	2	:::2400		3				167 MHZ
MEM_ADDR<0..12>	MEM_ADDR:::200	3	:::600						
RAM_ADDR<0..12>	RAM_ADDR:::1300	4	:::3500	200					
MEM_BA<0..1>	MEM_ADDR:::1300	3	:::600						
RAM_BA<0..1>	RAM_ADDR:::1300	4	:::4000	200					
MEM_CS_L<0..3>	MEM_ADDR:::200	3	:::600		10 MIL SPACING				
RAM_CS_L<0..1>	RAM_CS_GROUP0:::400	3	::2000:3500		10 MIL SPACING				
RAM_CS_L<2..3>	RAM_CS_GROUP1:::350	2	::2000:3500		10 MIL SPACING				
MEM_RAS_L	MEM_ADDR:::200	3	:::600						
MEM_CAS_L	MEM_ADDR:::200	3	:::600						
MEM_WE_L	MEM_ADDR:::280	3	:::600						
RAM_CAS_L	RAM_ADDR:::2000	4	:::4000	200					
RAM_RAS_L	RAM_ADDR:::2000	4	:::4000	200					
RAM_WE_L	RAM_ADDR:::2000	4	:::4000	200					
MEM_CKE<0..3>	MEM_ADDR:::200	3	:::600		10 MIL SPACING				
RAM_CKE<0..1>	RAM_CS_GROUP0:::400	3	:::2500		10 MIL SPACING				
RAM_CKE<2..3>	RAM_CS_GROUP1:::350	2	:::2500		10 MIL SPACING				
MEM_MUXSEL_H<0..1>		3	:::1000						
MEM_MUXSEL_L<0..1>		3	:::1000						167 MHZ
MUX_SEL_H		4	:::2000	200					167 MHZ
MUX_SEL_L		4	:::2000	200					167 MHZ
SYSCLK_DDRCLK_A0_UF		3	::500:850		8 MIL SPACING	270			167 MHZ
SYSCLK_DDRCLK_A0_L_UF		3	::500:850		8 MIL SPACING	270			167 MHZ
SYSCLK_DDRCLK_A0	SYSCLK_DDRCLKA0:::100	3	:::2600	200	8 MIL SPACING	270			167 MHZ
SYSCLK_DDRCLK_A0_L	SYSCLK_DDRCLKA0:::100	3	:::2600	200	8 MIL SPACING	270			167 MHZ
SYSCLK_DDRCLK_A1_UF		3	::500:850		8 MIL SPACING	270			167 MHZ
SYSCLK_DDRCLK_A1_L_UF		3	::500:850		8 MIL SPACING	270			167 MHZ
SYSCLK_DDRCLK_A1	SYSCLK_DDRCLKA1:::100	3	:::2600	200	8 MIL SPACING	270			167 MHZ
SYSCLK_DDRCLK_A1_L	SYSCLK_DDRCLKA1:::100	3	:::2600	200	8 MIL SPACING	270			167 MHZ
SYSCLK_DDRCLK_A2_UF		3	::500:850		8 MIL SPACING	270			167 MHZ
SYSCLK_DDRCLK_A2_L_UF		3	::500:850		8 MIL SPACING	270			167 MHZ
SYSCLK_DDRCLK_A2_L		3	:::750		8 MIL SPACING	270			167 MHZ
SYSCLK_DDRCLK_B0_UF		3	::500:850		8 MIL SPACING	270			167 MHZ
SYSCLK_DDRCLK_B0_L_UF		3	::500:850		8 MIL SPACING	270			167 MHZ
SYSCLK_DDRCLK_B0	SYSCLK_DDRCLKB0:::100	3	:::3500	200	8 MIL SPACING	270			167 MHZ
SYSCLK_DDRCLK_B0_L	SYSCLK_DDRCLKB0:::100	3	:::3500	200	8 MIL SPACING	270			167 MHZ
SYSCLK_DDRCLK_B1_UF		3	::500:850		8 MIL SPACING	270			167 MHZ
SYSCLK_DDRCLK_B1_L_UF		3	::500:850		8 MIL SPACING	270			167 MHZ
SYSCLK_DDRCLK_B1	SYSCLK_DDRCLKB1:::100	3	:::3500	200	8 MIL SPACING	270			167 MHZ
SYSCLK_DDRCLK_B1_L	SYSCLK_DDRCLKB1:::100	3	:::3200	200	8 MIL SPACING	270			167 MHZ
SYSCLK_DDRCLK_B2_UF		3	::500:850		8 MIL SPACING	270			167 MHZ
SYSCLK_DDRCLK_B2_L_UF		3	::500:850		8 MIL SPACING	270			167 MHZ
SYSCLK_DDRCLK_B2	SYSCLK_DDRCLKB2:::100	3	:::3500	200	8 MIL SPACING	270			167 MHZ
SYSCLK_DDRCLK_B2_L	SYSCLK_DDRCLKB2:::100	3	:::3500	200	8 MIL SPACING	270			167 MHZ
DDR_CLK_VDD_2		3	:::1000			400			167 MHZ
DDRCLK_A0_UF		3	::400:500		8 MIL SPACING	270			167 MHZ
DDRCLK_A1_UF		3	::400:500		8 MIL SPACING	270			167 MHZ
DDRCLK_A2_UF		3	::400:500		8 MIL SPACING	270			167 MHZ
DDRCLK_B0_UF		3	::400:500		8 MIL SPACING	270			167 MHZ
DDRCLK_B1_UF		3	::400:500		8 MIL SPACING	270			167 MHZ
DDRCLK_B2_UF		3	::400:500		8 MIL SPACING	270			167 MHZ
DDRCLK_A0_L_UF		3	::400:500		8 MIL SPACING	270			167 MHZ
DDRCLK_A1_L_UF		8	::400:500		8 MIL SPACING	270			167 MHZ
DDRCLK_A2_L_UF		3	::400:500		8 MIL SPACING	270			167 MHZ
DDRCLK_B0_L_UF		3	::400:500		8 MIL SPACING	270			167 MHZ
DDRCLK_B1_L_UF		3	::400:500		8 MIL SPACING	270			167 MHZ
DDRCLK_B2_L_UF		3	::400:500		8 MIL SPACING	270			167 MHZ
DDR_FBO		3	:::500		8 MIL SPACING	270			167 MHZ
DDR_FBO_L		3	:::500		8 MIL SPACING	270			167 MHZ
DDR_FBIN		8	::1550:1615		8 MIL SPACING	400			167 MHZ
DDR_FBIN_L		8	::1600:1650		8 MIL SPACING	270			167 MHZ
INT_REF_CLK_OUT		3	:::1500		10 MIL SPACING	270			49.92 MHZ
INT_REF_CLK_OUT_UF		8	:::1500		10 MIL SPACING	270			49.92 MHZ
CLKGEN_OUT_1		3	:::500		10 MIL SPACING	270			66.56 MHZ
INT_REF_CLK_IN_PD		8	:::2500		10 MIL SPACING	270			66.56 MHZ
PCI_AD<31..0>	MIN_DAISY_CHAIN	6	::6000:8000	500					33 MHZ
PCI_CBE<3..0>	MIN_DAISY_CHAIN	6	::6000:8000	500					33 MHZ
PCI_FRAME_L	MIN_DAISY_CHAIN	7	::6000:8000	500					33 MHZ

DIGITAL SIGNAL CONSTRAINTS

SIGNAL CONSTRAINTS

NOTICE OF PROPRIETARY PROPERTY
LAST_MODIFIED=Wed May 28 20:12:58 2003
THE INFORMATION CONTAINED HEREIN IS THE PROPRIETARY PROPERTY OF APPLE COMPUTER, INC. THE POSSESSOR AGREES TO THE FOLLOWING
I TO MAINTAIN THE DOCUMENT IN CONFIDENCE
II NOT TO REPRODUCE OR COPY IT
III NOT TO REVEAL OR PUBLISH IN WHOLE OR PART

APPLE COMPUTER INC.

SIZE	DRAWING NUMBER	REV.
D	051-6490	A

SCALE	SHT	OF
NONE	55	74

DRAWING

CR-56

SIG_NAME	RATSNEST_SCHEDULE MATCHED_DELAY	MAX_VIAS	DELAY_RULE	STUB_LENGTH	NET_SPACING_TYPE	MAX_EXPOSED_LENGTH	DIFFERENTIAL_PAIR	FUNC_TEST	PULSE_PARAM
PCI_IRDY_L	MIN_DAISY_CHAIN	6	::6000:8000	500					33 MHZ
PCI_TRDY_L	MIN_DAISY_CHAIN	6	::6000:8000	500					33 MHZ
PCI_DEVSEL_L	MIN_DAISY_CHAIN	6	::6000:8000	500					33 MHZ
PCI_STOP_L	MIN_DAISY_CHAIN	6	::6000:8000	500					33 MHZ
PCI_PAR	MIN_DAISY_CHAIN	6	::6000:8000	500					33 MHZ
CLK33M_PCI_SLOTB_UF		3	::600:1000	200		450			33 MHZ
CLK33M_PCI_SLOTC_UF		3	::600:1200	200		450			33 MHZ
CLK33M_PCI_SLOTD_UF		3	::600:1000	200		450			33 MHZ
CLK33M_PCI_SLOTB		5	::3000:4000	200	10 MIL SPACING	450			33 MHZ
INT_PCI_FB_OUT		4	:::1000	200		450			33 MHZ
PCI_FBO_PLUS2		4	:::200	200		450			33 MHZ
PCI_FB_PLUS4		4	::1900:2000			450			33 MHZ
PCI_FBI_PLUS2		4	::1900:2000	200		450			33 MHZ
PCI_FBI_EQUAL		4	::2000:3000	200		450			33 MHZ
PCI_FB_PLUS6		4	::5900:6000			450			33 MHZ
INT_PCI_FB_IN		4	:::1080	200		450			33 MHZ
PCIT_AD<31..0>		3	:::1000						33 MHZ
PCIT_CBE<31..0>		3	:::1000						33 MHZ
PCIT_FRAME_L		3	:::1000						33 MHZ
PCIT_IRDY_L		3	:::1000						33 MHZ
PCIT_TRDY_L		3	:::1000						33 MHZ
PCIT_DEVSEL_L		3	:::1000						33 MHZ
PCIT_STOP_L		3	:::1000						33 MHZ
PCIT_PAR		3	:::1000						33 MHZ
AGP_AD<0..15>	AGP_GROUP0:::280	5	:::4500						266 MHZ
AGP_CBE<0..1>	AGP_GROUP0:::330	5	:::4500						266 MHZ
AGP_AD_STB<0>	AGP_GROUP0:::330	4	:::4400	200	8 MIL SPACING	500	AGP_ADSTB0P0		133 MHZ
AGP_AD_STB_L<0>	AGP_GROUP0:::330	4	:::4400	200	8 MIL SPACING	500	AGP_ADSTB0P0		133 MHZ
AGP_AD<16..31>	AGP_GROUP0:::280	5	:::4500						266 MHZ
AGP_CBE<2..3>	AGP_GROUP0:::280	5	:::4500						266 MHZ
AGP_AD_STB<1>	AGP_GROUP0:::280	4	:::4400	200	8 MIL SPACING	500	AGP_ADSTB0P1		133 MHZ
AGP_AD_STB_L<1>	AGP_GROUP0:::330	4	:::4400	200	8 MIL SPACING	500	AGP_ADSTB0P1		133 MHZ
AGP_FRAME_L		5	::4000:4500						66 MHZ
AGP_IRDY_L		5	::4000:4500						66 MHZ
AGP_TRDY_L		5	::4000:4500						66 MHZ
AGP_DEVSEL_L		5	::4000:4500						66 MHZ
AGP_STOP_L		5	::4000:4500						66 MHZ
AGP_PAR		5	::4000:4500						66 MHZ
AGP_SBA<0..7>		5	::4000:4500						
AGP_SB_STB	AGP_GROUP99:::200	5	:::4500				AGP_SBSTB0		
AGP_SB_STB_L	AGP_GROUP99:::200	5	:::4500				AGP_SBSTB0		
AGP_ST<0..2>		5	::4500:5000						
AGP_PIPE_L		5	::4000:4500						
AGP_RBF_L		5	::4000:4500						
AGP_REQ_L		5	::4500:5000						
AGP_GNT_L		5	::4500:5000						
AGP_WBF_L		5	::4000:4500						
AGP_BUSY_L		5	::4500:5000						
STOP_AGP_L		5	::4500:5000						
GPU_AGP_AD<0..15>	GPU_AGP_GROUP0:::100	3	:::600						266 MHZ
GPU_AGP_CBE<0..1>	GPU_AGP_GROUP0:::100	3	:::600						266 MHZ
AGP_AD_STB_GPUUF<0>	GPU_AGP_STB0:::50	3	:::450		8 MIL SPACING	500	GPU_ADSTB0P0		133 MHZ
AGP_AD_STB_L_GPUUF<0>	GPU_AGP_STB0:::50	3	:::800		8 MIL SPACING	500	GPU_ADSTB0P0		133 MHZ
GPU_AGP_AD<16..31>	GPU_AGP_GROUP1:::100	3	:::600						266 MHZ
GPU_AGP_CBE<2..3>	GPU_AGP_GROUP1:::100	3	:::600						266 MHZ
AGP_AD_STB_GPUUF<1>	GPU_AGP_STB1:::50	3	:::800		8 MIL SPACING	500	GPU_ADSTB0P1		133 MHZ
AGP_AD_STB_L_GPUUF<1>	GPU_AGP_STB1:::50	3	:::800		8 MIL SPACING	500	GPU_ADSTB0P1		133 MHZ
GPU_AGP_FRAME_L		3	::300:600						66 MHZ
GPU_AGP_IRDY_L		3	::300:600						66 MHZ
GPU_AGP_TRDY_L		3	::300:600						66 MHZ
GPU_AGP_DEVSEL_L		3	::300:600						66 MHZ
GPU_AGP_STOP_L		3	::300:600						66 MHZ
GPU_AGP_PAR		3	::300:600						66 MHZ
GPU_AGP_SBA<0..7>		3	::300:600						
GPU_AGP_SB_STB	GPU_AGP_SBSTB:::50	3	::300:600				GPU_SBSTB0		
GPU_AGP_SB_STB_L	GPU_AGP_SBSTB:::50	3	::300:600				GPU_SBSTB0		
GPU_AGP_PIPE_L		3	::300:600						
GPU_AGP_RBF_L		3	::300:600						
CLK66M_GPU_UF		3	::1000:1100		10 MIL SPACING	250			66 MHZ
CLK66M_GPU_AGP		4	::3700:3900	200	10 MIL SPACING	250			66 MHZ
INT_AGP_FB_OUT		4	::1400:1500	200		250			66 MHZ
AGP_FBO_EQUAL		4	::900:1080	200		250			66 MHZ
AGP_FB_PLUS2		4	::1900:2000			250			66 MHZ
AGP_FBI_EQUAL		4	:::200	200		250			66 MHZ
INT_AGP_FB_IN		4	:::1200	200		250			66 MHZ
INT_ROM_OVERLAY_PU		3	::600:800		10 MIL SPACING	250			66 MHZ
INT_ANALYZER_CLK		2	:::2800		8 MIL SPACING	250			66 MHZ
CLK33M_PCI_SLOTD		4	::3000:3500	200	8 MIL SPACING	250			33 MHZ

SIGNAL CONSTRAINTS

NOTICE OF PROPRIETARY PROPERTY

LAST MODIFIED=Wed May 28 20:12:59 2003
THE INFORMATION CONTAINED HEREIN IS THE PROPRIETARY PROPERTY OF APPLE COMPUTER, INC. THE POSSESSOR AGREES TO THE FOLLOWING

I TO MAINTAIN THE DOCUMENT IN CONFIDENCE

II NOT TO REPRODUCE OR COPY IT

III NOT TO REVEAL OR PUBLISH IN WHOLE OR PART

APPLE COMPUTER INC.

SIZE D | DRAWING NUMBER 051-6490 | REV. A

SCALE NONE | SHT 56 OF 74

DRAWING

CR-57

DIGITAL SIGNALS

RATSNEST_SCHEDULE

GROUP	SIG_NAME	MATCHED_DELAY	MAX VIAS	DELAY_RULE	STUB_LENGTH	NET_SPACING_TYPE	MAX EXPOSED LENGTH	PULSE PARAM	
	FBD<0..63>	GPU_FBDATA_A:::225	4	:::800				300 MHZ	20E8 20F8 20G8 21C5 21C8 21D5 21D8
	RFBD<0..63>	RAM_FBDATA_A:::300	4	:::1000				300 MHZ	21C4 21C7 21D4 21D7 22B1 22B5 22C1 22C5
	FBDQM<0..7>	GPU_FBDQM_A:::200	4	:::800				300 MHZ	20D8 20G3
	RFBDQM<0..7>	RAM_FBDQM_A:::200	4	:::1000				300 MHZ	20G2 22C2 22C6
	FBA<0..12>	GPU_FBADDR_A:::200	4	:::700				300 MHZ	20C8 20D8 20E3 20F3
	RFBA<0..11>	RAM_FBADDR_A:::530	5	:::2400	2350			300 MHZ	20E2 20F2 22C2 22C6 22D2 22D6
	FBABA<0..1>	GPU_FBADDR_A:::200	4	:::600				300 MHZ	20C8 20E3
	RFBABA<0..1>	RAM_FBADDR_A:::530	5	:::2400	50			300 MHZ	20E2 22C2 22C6
	FBARAS_L	GPU_FBCNTL_A:::200	4	:::400				300 MHZ	20C8 20G3
	FBACAS_L	GPU_FBCNTL_A:::200	4	:::400				300 MHZ	20C8 20G3
	FBAWE_L	GPU_FBCNTL_A:::200	4	:::400				300 MHZ	20C8 20F3
	FBACS0_L	GPU_FBCNTL_A:::200	4	:::400				300 MHZ	20C8 20F3
	FBACKE	GPU_FBCNTL_A:::200	5	:::400	100			300 MHZ	20D3 20D7
	RFBARAS_L	RAM_FBCNTL_A:::350	5	:::2700	50			300 MHZ	20G2 22B2 22B6
	RFBACAS_L	RAM_FBCNTL_A:::500	5	:::2700	50			300 MHZ	20G2 22B2 22B6
	RFBAWE_L	RAM_FBCNTL_A:::500	5	:::2700	50			300 MHZ	20F2 22B2 22B6
	RFBACS0_L	RAM_FBCNTL_A:::350	5	:::2700	50			300 MHZ	20F2 22B2 22B6
	RFBACKE	RAM_FBCNTL_A:::500	5	:::2700	50			300 MHZ	20D2 22C2 22C6
	FBDQS<0..7>	GPU_FBDQS_A:::100	3	:::350				300 MHZ	20C7 21A8
	FBDQSTERM<0..7>	FB_DQSTERM_A:::50	3	:::1500		10 MIL SPACING		300 MHZ	21A7
	RFBDQS<0..7>	RAM_FBDQS_A:::55	3	:::150		10 MIL SPACING		300 MHZ	21A6 22C2 22C6
	FBACLK0	GPU_FBCLK_A:::50	3	:::150			200	300 MHZ	20D7 21C3
	FBACLK0_L	GPU_FBCLK_A:::50	3	:::150			200	300 MHZ	20D7 21C3
	FBACLK1	GPU_FBCLK_A:::50	3	:::150			200	300 MHZ	20D7 21D3
	FBACLK1_L	GPU_FBCLK_A:::50	3	:::150			200	300 MHZ	20D7 21D3
	RFBACLK1	RAM_FBCLK_A:::80	3	:::2500			200	300 MHZ	21D1 22C2
	RFBACLK1_L	RAM_FBCLK_A:::80	3	:::2500			200	300 MHZ	21D1 22C2
	RFBACLK0	RAM_FBCLK_A:::70	3	:::2500			200	300 MHZ	21C1 22C6
	RFBACLK0_L	RAM_FBCLK_A:::70	3	:::2500			200	300 MHZ	21C1 22C6
	FBD<64..127>	GPU_FBDATA_B:::225	4	:::800				300 MHZ	20E5 20F5 20G5 21B5 21B8 21C5 21C8
	RFBD<64..127>	RAM_FBDATA_B:::325	4	:::1000				300 MHZ	21B4 21B7 21C4 21C7 23B1 23B5 23C1 23C5
	FBDQM<8..15>	GPU_FBDQM_B:::120	4	:::800				300 MHZ	20C3 20D3 20D5
	RFBDQM<8..15>	RAM_FBDQM_B:::120	4	:::1000				300 MHZ	20C2 20D2 23C2 23C6
	FBBA<0..12>	GPU_FBADDR_B:::120	4	:::600				300 MHZ	20A3 20B3 20C3 20C5 20D5
	RFBBA<0..11>	RAM_FBADDR_B:::370	5	:::2400	50			300 MHZ	20B2 20C2 23C2 23C6 23D2 23D6
	FBBBA<0..1>	GPU_FBADDR_B:::120	4	:::600				300 MHZ	20A3 20C5
	RFBBBA<0..1>	RAM_FBADDR_B:::370	5	:::2400	50			300 MHZ	20A2 23C2 23C6
	FBBRAS_L	GPU_FBCNTL_B:::120	4	:::400				300 MHZ	20C3 20D4
	FBBCAS_L	GPU_FBCNTL_B:::120	4	:::400				300 MHZ	20C3 20D4
	FBBWE_L	GPU_FBCNTL_B:::120	4	:::400				300 MHZ	20C3 20D4
	FBBCS0_L	GPU_FBCNTL_B:::120	4	:::400				300 MHZ	20C3 20C4
	FBBCKE	GPU_FBCNTL_B:::120	5	:::400	100			300 MHZ	20A3 20C4
	RFBBRAS_L	RAM_FBCNTL_B:::2000	5	:::3500	3550			300 MHZ	20C2 23B2 23B6
	RFBBCAS_L	RAM_FBCNTL_B:::2000	5	:::3500	3550			300 MHZ	20C2 23B2 23B6
	RFBBWE_L	RAM_FBCNTL_B:::2000	5	:::3500	3550			300 MHZ	20C2 23B2 23B6
	RFBBCS0_L	RAM_FBCNTL_B:::2000	5	:::3500	3550			300 MHZ	20C2 23B2 23B6
	RFBBCKE	RAM_FBCNTL_B:::2000	5	:::3500	3550			300 MHZ	20A2 23C2 23C6
	FBDQS<8..15>	GPU_FBDQS_B:::100	3	:::350		10 MIL SPACING		300 MHZ	20D4 21A5
	FBDQSTERM<8..15>	FB_FBDQSTERM_B:::60	3	:::1500		10 MIL SPACING		300 MHZ	21A4
	RFBDQS<8..15>	RAM_FBDQS_B:::50	3	:::150		10 MIL SPACING		300 MHZ	21A3 23C2 23C6
	FBBCLK0	GPU_FBCLK_B:::50	3	:::150			200	300 MHZ	20C5 21B3
	FBBCLK0_L	GPU_FBCLK_B:::50	3	:::150			200	300 MHZ	20C5 21B3
	FBBCLK1	GPU_FBCLK_B:::50	3	:::150			200	300 MHZ	20C5 21C3
	FBBCLK1_L	GPU_FBCLK_B:::50	3	:::150			200	300 MHZ	20C5 21B3
	RFBBCLK1	RAM_FBCLK_B:::90	4	:::2500			200	300 MHZ	21C1 23C2
	RFBBCLK1_L	RAM_FBCLK_B:::90	3	:::2500			200	300 MHZ	21B1 23C2
	RFBBCLK0	RAM_FBCLK_B:::90	3	:::2500			200	300 MHZ	21B1 23C6
	RFBBCLK0_L	RAM_FBCLK_B:::90	3	:::2500			200	300 MHZ	21B1 23C6

SIGNAL CONSTRAINTS

NOTICE OF PROPRIETARY PROPERTY

LAST MODIFIED=Wed May 28 20:13:00 2003
THE INFORMATION CONTAINED HEREIN IS THE PROPRIETARY PROPERTY OF APPLE COMPUTER, INC. THE POSSESSOR AGREES TO THE FOLLOWING

I TO MAINTAIN THE DOCUMENT IN CONFIDENCE

II NOT TO REPRODUCE OR COPY IT

III NOT TO REVEAL OR PUBLISH IN WHOLE OR PART

APPLE COMPUTER INC.

SIZE D | DRAWING NUMBER 051-6490 | REV. A

SCALE NONE | SHT 57 OF 74

DRAWING

CR-58

DIGITAL SIGNALS

	GROUP	SIG_NAME	MATCHED_DELAY	MAX_VIAS	DELAY_RULE	STUB_LENGTH	NET_SPACING_TYPE	NO_TEST	PULSE_PARAM	MAX_EXPOSED_LENGTH	
1	MAXBUS	CPU_ADDR<0..31>	CPU_ADDR_GROUP:::1250	7	:::5000	250			166 MHZ		4B7 4C7 9B7 9B8 9C5 9C6 9C7 9C8 11C3 11D3 11D8
2		CPU_DATA<0..63>	CPU_DATA_GROUP:::1400	7	:::5000	1550			166 MHZ		5A4 5B4 5C4 5D4 9C5 9C6 9C7 9C8 9D5 9D6 9D7 9D8
3		CPU_BR_L	CPU_CNTL_GROUP:::1100	7	:::5000	250	10 MIL SPACING		166 MHZ		4D7 7C7 9C5 11D3 11B1 11B5 11B8 11C1 11C5 11D1 11D5
4		CPU_BG_L	CPU_CNTL_GROUP:::1100	7	:::5000	250	10 MIL SPACING		166 MHZ		4D7 7B7 9B5 11D3
5		CPU_TS_L	CPU_CNTL_GROUP:::1000	7	:::5000	250	10 MIL SPACING		166 MHZ		4D7 7C7 9C7 11D3
6		CPU_TT<0..4>	CPU_CNTL_GROUP:::1300	7	:::5000	250	10 MIL SPACING		166 MHZ		4B7 7A7 9B5 9B6 9C5 9C6 11B3
7		CPU_TBST_L	CPU_CNTL_GROUP:::1100	7	:::5000	250	10 MIL SPACING		166 MHZ		4B7 7B7 9B5 11B3
8		CPU_TSIZ<0..2>	CPU_CNTL_GROUP:::1260	7	:::5000	250	10 MIL SPACING		166 MHZ		4B7 9B6 9B7 9C6 11B3
9		CPU_ARTRY_L	CPU_CNTL_GROUP:::1000	7	:::5000	250	10 MIL SPACING		166 MHZ		4A7 7C7 9B8 11B3
10		CPU_AACK_L	CPU_CNTL_GROUP:::1000	7	:::5000	250	10 MIL SPACING		166 MHZ		4A7 7B7 9B6 11B3
11		CPU_GBL_L	CPU_CNTL_GROUP:::1000	3	:::1000	250	10 MIL SPACING		166 MHZ		4B8 9B6
12		CPU_INT_GBL_L	CPU_CNTL_GROUP:::1100	5	:::3500	250	10 MIL SPACING		166 MHZ		4B8 7B7 11C3
13		CPU_CI_L	CPU_CNTL_GROUP:::1000	7	:::5000	250	10 MIL SPACING		166 MHZ		4A7 7A7 9C6 11C3
14		CPU_HIT_L	CPU_CNTL_GROUP:::1000	7	:::5000	250	10 MIL SPACING		166 MHZ		4A7 7C7 9B8 11B3
15		CPU_DBG_L	CPU_CNTL_GROUP:::1000	7	:::3500	250	10 MIL SPACING		166 MHZ		4C3 7B7 9C8 11B1
16		CPU_DRDY_L	CPU_CNTL_GROUP:::1100	5	:::500	250	10 MIL SPACING		166 MHZ		4C2 7B7 9B6 11B1
17		CPU_WT_L	CPU_CNTL_GROUP:::1000	7	:::5000	250	10 MIL SPACING		166 MHZ		4B7 7A7 9B6 11B3
18		CPU_DRDY_L_UF		2	:::5000	250	10 MIL SPACING		166 MHZ		4C3
19		CPU_DTI<0..2>	CPU_CNTL_GROUP:::1150	7	:::5000	250	10 MIL SPACING		166 MHZ		4C3 9B5 9B7 11A1
20		CPU_TA_L	CPU_CNTL_GROUP:::1100	7	:::5000	250	10 MIL SPACING		166 MHZ		4C3 7C7 9C5 11A1
21		CPU_TEA_L	CPU_CNTL_GROUP:::1100	7	:::5000	250	10 MIL SPACING		166 MHZ		4C3 7B7 9C6 11A1
22		CPU_QREQ_L	CPU_CNTL_GROUP:::1000	7	:::5000	250	10 MIL SPACING		166 MHZ		4C3 7D5 9B7 11B3
23		CPU_QACK_L	CPU_CNTL_GROUP:::1000	8	:::4000	250	10 MIL SPACING		166 MHZ		4C3 9B5 11B3
24		SYSCLK_CPU_UF		2	:::150		10 MIL SPACING		166 MHZ	315	11A3
25		SYSCLK_CPU		4	::2200:2400	200	10 MIL SPACING		166 MHZ	315	4D2 11A4
26		INT_CPU_FB_OUT		3	:::1000	200			166 MHZ	315	11B3
27		CPU_FBO_PLUS1		3	:::200	200			166 MHZ	315	11A4
28		CPU_FBI_PLUS1		3	::1400:1500	200			166 MHZ	315	11A4
29		CPU_FB_MINUS3		4	::900:1000	200			166 MHZ	315	11A4
30		INT_CPU_FB_IN		4	:::1000	200			166 MHZ	315	11B3
31		CPU_FB_PLUS2		3	::900:1000				166 MHZ	315	11A5
32		CPU_FB_PLUS3		3	::2900:3000				166 MHZ	315	11A4
33		INT_ANALYZER_CLK		3	:::300				166 MHZ		9B4 11B4 18C7 56A7 61A7
34		SYSCLK_LA		2	:::2000				166 MHZ		9B3 9D8
35		INT_CLOCK_OUT		3	:::3000				166 MHZ		9C4
								MIN_LINE_WIDTH		DIFFERENTIAL_PAIR	
36		USB2_XTI		3	:::1000	100	10 MIL SPACING		30 MHZ		34C4
37		USB2_XT2_B		3	:::1000	100	10 MIL SPACING		30 MHZ		
38		USB2_XT2		3	:::100	100	10 MIL SPACING		30 MHZ		34C4
39		USB2_RREF		2	:::100						34B4
40		USB2_RSDAM	USB2_RSDA:::20	2	:::500		8 MIL SPACING	3.5	480 MHZ		34C4
41		USB2_RSDAP	USB2_RSDA:::20	2	:::500		8 MIL SPACING	3.5	480 MHZ		34C4
42		USB2_RSDBM	USB2_RSDB:::20	2	:::500		8 MIL SPACING	3.5	480 MHZ		34C4
43		USB2_RSDBP	USB2_RSDB:::20	2	:::500		8 MIL SPACING	3.5	480 MHZ		34C4
44		USB2_RSDCM	USB2_RSDC:::20	2	:::500		8 MIL SPACING	3.5	480 MHZ		34C4
45		USB2_RSDCP	USB2_RSDC:::20	2	:::500		8 MIL SPACING	3.5	480 MHZ		34C4
46		USB2_DAN_F	USB2_DMA:::30	3	:::500	50	8 MIL SPACING	3.5	480 MHZ	USB2_DMA_DP	MIN_DAISY_CHAIN 34C1 34C4 35B7
47		USB2_DAP_F	USB2_DMA:::30	3	:::500	50	8 MIL SPACING	3.5	480 MHZ	USB2_DMA_DP	MIN_DAISY_CHAIN 34C1 35B7
48		USB2_DBN_F	USB2_DMB:::20	3	:::500	50	8 MIL SPACING	3.5	480 MHZ	USB2_DMB_DP	MIN_DAISY_CHAIN 34C1 35C7
49		USB2_DBP_F	USB2_DMB:::20	3	:::500	50	8 MIL SPACING	3.5	480 MHZ	USB2_DMB_DP	MIN_DAISY_CHAIN 34C1 34C4 35C7
50		USB2_DCN_F	USB2_DMC:::20	3	:::500	50	8 MIL SPACING	3.5	480 MHZ	USB2_DMC_DP	MIN_DAISY_CHAIN 34C1 35D7
51		USB2_DCP_F	USB2_DMC:::20	3	:::500	50	8 MIL SPACING	3.5	480 MHZ	USB2_DMC_DP	MIN_DAISY_CHAIN 34C1 35D7
52		USBT_DAN_F	USB2_DMAT:::60	4	:::3000	2000	8 MIL SPACING	3.5	480 MHZ	USB2_DMAT_DP	MIN_DAISY_CHAIN 35B6
53		USBT_DAP_F	USB2_DMAT:::60	4	:::3000	2000	8 MIL SPACING	3.5	480 MHZ	USB2_DMAT_DP	MIN_DAISY_CHAIN 35B6
54		USBT_DBN_F	USB2_DMBT:::60	4	:::3000	2000	8 MIL SPACING	3.5	480 MHZ	USB2_DMBT_DP	MIN_DAISY_CHAIN 35C6
55		USBT_DBP_F	USB2_DMBT:::60	4	:::3000	2000	8 MIL SPACING	3.5	480 MHZ	USB2_DMBT_DP	MIN_DAISY_CHAIN 35C6
56		USBT_DCN_F	USB2_DMCT:::60	4	:::3000	2000	8 MIL SPACING	3.5	480 MHZ	USB2_DMCT_DP	MIN_DAISY_CHAIN 35D6
57		USBT_DCP_F	USB2_DMCT:::60	4	:::3000	2000	8 MIL SPACING	3.5	480 MHZ	USB2_DMCT_DP	MIN_DAISY_CHAIN 35D6
58		USB_DAN_CON	USB2_CONA:::30	2	:::750	50	8 MIL SPACING	3.5	480 MHZ	USB2_CONA_DP	MIN_DAISY_CHAIN 35C3 61C4
59		USB_DAP_CON	USB2_CONA:::30	2	:::750	50	8 MIL SPACING	3.5	480 MHZ	USB2_CONA_DP	MIN_DAISY_CHAIN 35C3 61C4
60		USB_DBN_CON	USB2_CONB:::30	2	:::750	50	8 MIL SPACING	3.5	480 MHZ	USB2_CONB_DP	MIN_DAISY_CHAIN 35B3 61C4
61		USB_DBP_CON	USB2_CONB:::30	2	:::750	50	8 MIL SPACING	3.5	480 MHZ	USB2_CONB_DP	MIN_DAISY_CHAIN 35B3 61C4
62		USB_DCN_CON	USB2_CONC:::30	2	:::750	50	8 MIL SPACING	3.5	480 MHZ	USB2_CONC_DP	MIN_DAISY_CHAIN 35D3 61C4
63		USB_DCP_CON	USB2_CONC:::30	2	:::750	50	8 MIL SPACING	3.5	480 MHZ	USB2_CONC_DP	MIN_DAISY_CHAIN 35D3 61C4

RATSNEST_SCEDULE

SIGNAL CONSTRAINTS

NOTICE OF PROPRIETARY PROPERTY

LAST_MODIFIED=Wed May 28 20:13:00 2003
THE INFORMATION CONTAINED HEREIN IS THE PROPRIETARY PROPERTY OF APPLE COMPUTER, INC. THE POSSESSOR AGREES TO THE FOLLOWING

I TO MAINTAIN THE DOCUMENT IN CONFIDENCE

II NOT TO REPRODUCE OR COPY IT

III NOT TO REVEAL OR PUBLISH IN WHOLE OR PART

APPLE COMPUTER INC.

SIZE D | DRAWING NUMBER 051-6490 | REV. A

SCALE NONE | SHT 58 OF 74

DRAWING

DIGITAL SIGNALS

GROUP	SIG_NAME	MATCHED_DELAY	MAX_VIAS	DELAY_RULE	STUB_LENGTH	NET_SPACING_TYPE	MIN_LINE_WIDTH MAX_EXPOSED_LENGTH	PULSE_PARAM				
NEW STUFF HERE	VSYNC*		3	:::1000					24C5			
	ANALOG_VSYNC*		4	:::3500					24C8	27C6	28B5	61B7
	HSYNC*		3	:::1000					24C5			
	ANALOG_HSYNC*		5	:::3500					24C8	27C4	27D6	28B5 61B7
	ANALOG_BLU		4	:::4000	200	10 MIL SPACING	5.8		24C5	24C8	27C6	
	ANALOG_GRN		4	:::4000	200	10 MIL SPACING	5.8		24C5	24C8	27C6	
	ANALOG_RED		4	:::4000	200	10 MIL SPACING	5.8		24C5	24C8	27B6	
	FILT_ANALOG_RED		2	:::500		10 MIL SPACING	5.8		27C5	61B7		
	FILT_ANALOG_GRN		2	:::500		10 MIL SPACING	5.8		27C5	61B7		
	FILT_ANALOG_BLU		2	:::500		10 MIL SPACING	5.8		27C5	61B7		
	DAC2RSET			:::1000		10 MIL SPACING			24C6			
	DAC2VREF			:::1000		10 MIL SPACING			24C5			
	NV11_XTALIN		4	:::1000	100	8 MIL SPACING		27 MHZ	24B4			
	NV11_XTALOUT		4	:::1000	100	8 MIL SPACING		27 MHZ	24B4			
	INT_TMDS_CKP	TMDS:::120	3		50	8 MIL SPACING	TMDS_CLK		25D2	26B6	61A7	
	INT_TMDS_CKM	TMDS:::120	3		50	8 MIL SPACING	TMDS_CLK		25D2	26A6	61A7	
	INT_TMDS_D0P	TMDS:::120	3		50	8 MIL SPACING	TMDS_D0		25D2	26B6	61B7	
	INT_TMDS_D0M	TMDS:::120	3		50	8 MIL SPACING	TMDS_D0		25D2	26B6	61A7	
	INT_TMDS_D1P	TMDS:::120	3		50	8 MIL SPACING	TMDS_D1		25D2	26C6	61B7	
	INT_TMDS_D1M	TMDS:::120	3		50	8 MIL SPACING	TMDS_D1		25D2	26C6	61B7	
	INT_TMDS_D2P	TMDS:::120	3		50	8 MIL SPACING	TMDS_D2		25C2	26D6	61B7	
	INT_TMDS_D2M	TMDS:::120	3		50	8 MIL SPACING	TMDS_D2		25C2	26D6	61B7	
	TCKP	TMDSFILT:::50	2		20	8 MIL SPACING	TMDSFILT_CLK		26B5	26C4		
	TCKM	TMDSFILT:::50	2		20	8 MIL SPACING	TMDSFILT_CLK		26A5	26C3		
	TD0P	TMDSFILT:::50	2		20	8 MIL SPACING	TMDSFILT_D0		26B5	26C3		
	TD0M	TMDSFILT:::50	2		20	8 MIL SPACING	TMDSFILT_D0		26B5	26C4		
	TD1P	TMDSFILT:::50	2		20	8 MIL SPACING	TMDSFILT_D1		26C4	26C5		
	TD1M	TMDSFILT:::50	2		20	8 MIL SPACING	TMDSFILT_D1		26C3	26C5		
	TD2P	TMDSFILT:::50	2		20	8 MIL SPACING	TMDSFILT_D2		26C3	26D5		
	TD2M	TMDSFILT:::50	2		20	8 MIL SPACING	TMDSFILT_D2		26C4	26D5		
	ENET_LINK_TX_EN		4	:::1000				25 MHZ	36D6			
	ENET_LINK_TX_ER		4	:::1000				25 MHZ	36D6			
	ENET_LINK_TXD<0..3>		4	:::1000				25 MHZ	36C6			
	ENET_PHY_TX_EN		4	:::5600				25 MHZ	36D7	37C6		
	ENET_PHY_TX_ER		4	:::5600				25 MHZ	36D7	37C6		
	ENET_PHY_TXD<0..3>		4	::4600:5600				25 MHZ	36C7	37C6		
	CLKENET_LINK_TX		4	::4600:5600				25 MHZ	36D7	37C8		
	CLKENET_PHY_TX		4	:::1000				25 MHZ	37C6			
	CLKENET_LINK_RX		4	::4600:5600				25 MHZ	36C7	37C8		
	CLKENET_PHY_RX		4	:::1000				25 MHZ	37C6			
	ENET_PHY_RXD<0..3>		4	:::1000				25 MHZ	37B6	37C6		
	ENET_PHY_RX_DV		4	:::1000				25 MHZ	37B6			
	ENET_PHY_RX_ER		4	:::1000				25 MHZ	37B6			
	ENET_PHY_CRS		4	:::1000				25 MHZ	37B6			
	ENET_PHY_COL		4	:::1000				25 MHZ	37B6			
	ENET_LINK_RXD<0..3>		4	::4600:5600				25 MHZ	36C7	37B8	37C8	
	ENET_CRS		4	::4600:5600				25 MHZ	36C7	37B8		
	ENET_COL		4	::4600:5600				25 MHZ	36B7	37B8		
	ENET_RX_DV		4	::4600:5600				25 MHZ	36C7	37B8		
	ENET_RX_ER		4	::4600:5600				25 MHZ	36C7	37B8		
	CLK25M_ENET_XIN		3	:::1000	100	8 MIL SPACING		25 MHZ	37B6			
	CLK25M_ENET_XOUT		3	:::1000	100	8 MIL SPACING		25 MHZ	37B6			
	ENET_TDP	ETHTD:::70	3	:::4000	3150	10 MIL SPACING	ETH_TXD	100 MHZ	37C3			
	ENET_TDN	ETHTD:::70	3	:::4000	3150	10 MIL SPACING	ETH_TXD	100 MHZ	37C3			
	ENET_RDP	ETHRD:::70	3	:::4000	3150	10 MIL SPACING	ETH_RXD	100 MHZ	37C3			
	ENET_RDN	ETHRD:::70	3	:::4000	3150	10 MIL SPACING	ETH_RXD	100 MHZ	37C3			
	RJ45_TXP	RJTXD:::70	2	:::750		2KV_ISO	RJ45_TXD	100 MHZ	37C1	37C2		
	RJ45_TXN	RJTXD:::70	2	:::750		2KV_ISO	RJ45_TXD	100 MHZ	37C1	37C2		
	RJ45_RXP	RJRXD:::70	2	:::750		2KV_ISO	RJ45_RXD	100 MHZ	37C1	37C2		
	RJ45_RXN	RJRXD:::70	2	:::750		2KV_ISO	RJ45_RXD	100 MHZ	37C1	37C2		
	RJ45_TREF					2KV_ISO			37C2			
	RJ45_RREF					2KV_ISO			37C2			
	RJ45_4_5					2KV_ISO			37C1			
	RJ45_7_8					2KV_ISO			37C1			
	RJ45_F_TREF					2KV_ISO			37B2			
	FW_LINK_DATA<0..7>		4	:::1000					36C5			
	FW_LINK_CNTL<0..1>		4	:::1000				49.152 MHZ	36C5			
	FW_LINK_LREQ		4	:::1000				49.152 MHZ	36C5			
	FW_SCLK		4	::3500:4500				49.152 MHZ	36C5	38C8		
	FW_D<0..7>		4	::3700:4700				49.152 MHZ	36C3	38B8	38C8	
	FW_CNTL0		4	::3700:4700				49.152 MHZ	36C3	38C8		
	FW_CNTL1		4	::3700:4700				49.152 MHZ	36C3	38C8		
	FW_LREQ		4	::3700:4700				49.152 MHZ	36C3	38C8		
	FW_PHY_SCLK		4	:::500				49.152 MHZ	38C7			
	FW_PHY_CNTL0		4	:::1000				49.152 MHZ	38C7			
	FW_PHY_CNTL1		4	:::1000				49.152 MHZ	38C7			
	FW_PHY_D<0..7>		4	:::1000				49.152 MHZ	38B7	38C7		
	FW_XI		3	:::1000	100	8 MIL SPACING		24.576 MHZ	38C6			
	FW_XO		3	:::1000	100	8 MIL SPACING		24.576 MHZ	38C6			
	FW_BIAS1								38C5			
	FW_BIAS2								38C5			
	FW_TPA1P	FWTPA1:::50	3	:::1220	5000		FW_TPA1	400 MHZ	38C5			
	FW_TPA1N	FWTPA1:::50	3	:::1220	5000		FW_TPA1	400 MHZ	38C5			
	FW_TPB1P	FWTPB1:::50	3	:::1220	5000		FW_TPB1	400 MHZ	38C5			
	FW_TPB1N	FWTPB1:::50	3	:::1220	5000		FW_TPB1	400 MHZ	38C5			
	FW_TPA2P	FWTPA2:::50	3	:::1220	5000		FW_TPA2	400 MHZ	38C5			
	FW_TPA2N	FWTPA2:::50	3	:::1220	5000		FW_TPA2	400 MHZ	38C5			
	FW_TPB2P	FWTPB2:::50	3	:::1220	5000		FW_TPB2	400 MHZ	38C5			
	FW_TPB2N	FWTPB2:::50	3	:::1220	5000		FW_TPB2	400 MHZ	38C5			
	FW_TPO1P	FWTPO1:::50	3	:::1220	5000		FW_TPO1	400 MHZ	38B8	38D1		
	FW_TPO1N	FWTPO1:::50	3	:::1220	5000		FW_TPO1	400 MHZ	38A8	38D1		
	FW_TPI1P	FWTPL1:::50	3	:::1220	5000		FW_TPL1	400 MHZ	38A8	38D1		
	FW_TPI1N	FWTPL1:::50	3	:::1220	5000		FW_TPL1	400 MHZ	38A8	38D1		
	FW_TPO2P	FWTPO2:::50	3	:::1220	5000		FW_TPO2	400 MHZ	38A8	38C1		
	FW_TPO2N	FWTPO2:::50	3	:::1220	5000		FW_TPO2	400 MHZ	38A8	38C1		
	FW_TPI2P	FWTPL2:::50	3	:::1220	5000		FW_TPL2	400 MHZ	38A8	38C1		
	FW_TPI2N	FWTPL2:::50	3	:::1220	5000		FW_TPL2	400 MHZ	38A8	38C1		

SIGNAL CONSTRAINTS

NOTICE OF PROPRIETARY PROPERTY

LAST MODIFIED=Wed May 28 20:13:01 2003
THE INFORMATION CONTAINED HEREIN IS THE PROPRIETARY PROPERTY OF APPLE COMPUTER, INC. THE POSSESSOR AGREES TO THE FOLLOWING

I TO MAINTAIN THE DOCUMENT IN CONFIDENCE

II NOT TO REPRODUCE OR COPY IT

III NOT TO REVEAL OR PUBLISH IN WHOLE OR PART

APPLE COMPUTER INC.

SIZE D | DRAWING NUMBER 051-6490 | REV. A

SCALE NONE | SHT 59 OF 74

DRAWING

DIGITAL SIGNALS (CONT'D)

	GROUP	SIG_NAME	MATCHED_DELAY	MAX_VIAS	DELAY_RULE	STUB_LENGTH	NET_SPACING_TYPE	MAX_EXPOSED_LENGTH	PULSE_PARAM				
117	CD DRIVE BUS	EIDE_RST_L			::3500:5500				33 MHZ	39A7	39D5		
118		EIDE_DMACK_L			::3500:5500				33 MHZ	39A7	39D5		
119		EIDE_STOP			:::5500				33 MHZ	39A7	39D5		
120		EIDE_HSTB_RDY			:::5500				33 MHZ	39A7	39C5		
121		EIDE_DSTB_RDY			::3500:5500				33 MHZ	39A7	39C5		
122		EIDE_DATA<0..15>			::3500:5500				33 MHZ	39A5	39B5	39B7	39C5
123		CD_RESET_L			:::1000				33 MHZ	39D4	40C6		
124		CD_DMACK_L			:::4000				33 MHZ	39D4	40C6		
125		CD_STOP			:::5000				33 MHZ	39D4	40C6		
126		CD_HSTB_RDY			:::5000				33 MHZ	39C4	40C6		
127		CD_DSTB_RDY			:::1000				33 MHZ	39C4	40C6		
128		UATADD<0..15>			:::1000				33 MHZ	39A4	39B4	39C4	40C6
129		CD_DMARQ			:::1000				33 MHZ	40C6			
130		EIDE_DMARQ			::3500:5500				33 MHZ	39A7	40C8		
131		UATADIRQ			:::1000				33 MHZ	40C6			
132		EIDE_INTRQ			::3500:5500				33 MHZ	39A7	40C8		
133		CD_EIDE_ADDR<0..2>			:::1000				33 MHZ	40C6			
134		EIDE_ADDR<0..2>			::3500:5500				33 MHZ	39B7	40A8	40B8	
135		CD_CS1FX_L			:::1000				33 MHZ	40C6			
136		EIDE_CS1FX_L			::3500:5500				33 MHZ	39A7	40B8		
137		CD_CS3FX_L			:::1000				33 MHZ	40C6			
138		EIDE_CS3FX_L			::3500:5500				33 MHZ	39A7	40B8		
	HD DRIVE BUS												
139		UIDE_RST_L			::100:6000				100 MHZ	39C7	39D3		
140		UIDE_DMACK_L	HD_DATA:::5500		::100:6000	500			100 MHZ	39C7	39D3		
141		UIDE_DIOR_L	HD_DATA:::5500		::100:6000				100 MHZ	39C7	39D3		
142		UIDE_DIOW_L	HD_DATA:::5500		:::6000				100 MHZ	39C3	39C7		
143		UIDE_IOCHRDY	HD_DATA:::5500		::100:6000	500			100 MHZ	39C3	39C7		
144		UIDE_DATA<0..15>	HD_DATA:::5500		::100:6000				100 MHZ	39A3	39B3	39C3	39C7 39D7
145		HD_RESET_L			:::1000				100 MHZ	39D1	40C3		
146		HD_DMACK_L			:::1000				100 MHZ	39D1	40C3		
147		HD_DIOR_L			:::5500				100 MHZ	39D1	40C3		
148		HD_DIOW_L			:::55000				100 MHZ	39C1	40C3		
149		HD_IOCHRDY			:::1000				100 MHZ	39C1	40C3		
150		HD_DMARQ			:::1000				100 MHZ	40C3			
151		UIDE_DMARQ	HD_DATA:::5500		::100:6000				100 MHZ	39C7	40C4		
152		HD_INTRQ			:::1000	500			100 MHZ	40C3			
153		UIDE_INTRQ	HD_DATA:::5500		::100:6000				100 MHZ	39C7	40C4		
154		HD_UIDE_ADDR<0..2>			:::1000				100 MHZ	40C2	40C3		
155		UIDE_ADDR<0..2>	HD_DATA:::5500		::100:6000				100 MHZ	39C7	40A4	40B4	
156		HD_UIDE_CS1FX_L			:::6000				100 MHZ	40C3			
157		UIDE_CS1FX_L	HD_DATA:::5500		:::6000				100 MHZ	39C7	40B4		
158		HD_UIDE_CS3FX_L			:::6000				100 MHZ	40C2			
159		UIDE_CS3FX_L	HD_DATA:::5500		:::6000				100 MHZ	39C7	40B4		
160		CLK_18M_INT_XOUT		3	:::1000	100	8 MIL SPACING		18.432 MHZ	60B5			
161		CLK_18M_INT_XOUT		3	:::1000	100	8 MIL SPACING		18.432 MHZ	60B5			
162		CLK_18M_INT_XOUT		3	:::200	50	8 MIL SPACING		18.432 MHZ	60B5			
163		USB_DAP	USBA:::500							30B3			
164		USB_DAN	USBA:::500							30B3			
165		USB_DAP_F	USBA_F:::500			100				30B2	35B7		
166		USB_DAN_F	USBA_F:::500			100				30B2	35B7		
167		USB_DBP	USBB:::500							30B3			
168		USB_DBN	USBB:::500							30B3			
169		USB_DBP_F	USBB_F:::500			100				30B2	35C7		
170		USB_DBN_F	USBB_F:::500			100				30B2	35C7		
171		USB_DCP	USBC:::500							30B3			
172		USB_DCN	USBC:::500							30B3			
173		USB_DCP_F	USBC_F:::500			100				30B2	35D7		
174		USB_DCN_F	USBC_F:::500			100				30B2	35D7		
175		USB_DEP	USBE:::500							30B3			
176		USB_DEN	USBE:::500							30B3			
177		BT_USB_DP	USBE_F:::500			100				30B2	31D3	61B4	
178		BT_USB_DM	USBE_F:::500			100				30B2	31D3	61B4	
179		USB_DFP	USBF:::500							30B3			
180		USB_DFN	USBF:::500							30B3			
181		MODEM_USB_DP	USBF_F:::500			100				30B2	31C5	61B4	
182		MODEM_USB_DM	USFE_F:::500			100				30B2	31C5	61B4	
183													
184		PMU_XO		3	:::1000	100	8 MIL SPACING		10 MHZ	46B5			
185		PMU_XI		3	:::1000	100	8 MIL SPACING		10 MHZ	46B5			
186		PMU_XT		3	:::300	50	8 MIL SPACING		10 MHZ	46A6			
187		PMU_CLKOUT		3	:::1000	100	8 MIL SPACING		32.768 MHZ	46B4			
188		PMU_CLKIN		3	:::1000	100	8 MIL SPACING		32.768 MHZ	46B4			
189		PMU_CLKT		3	:::300	50	8 MIL SPACING		32.768 MHZ	46B2			
190		MICSHLD					10 MIL SPACING			31A5	45B8	61A7	
191		MICHIGH					10 MIL SPACING			31A5	45C8	61A7	
192		MICLOW					10 MIL SPACING			31A5	45B8	61A7	
193		KS_INT_SPKR+					10 MIL SPACING			31A3	44C3	61B7	
194		KS_INT_SPKR-					10 MIL SPACING			31A3	44C3	61B7	

	SIG_NAME	DELAY_RULE	PULSE_PARAM			
1	T_UD_IDEDD_0	:::1000	100 MHZ	39C1	40C3	
2	T_UD_IDEDD_1	:::1000	100 MHZ	39C1	40C3	
3	T_UD_IDEDD_2	:::1000	100 MHZ	39C1	40C3	
4	T_UD_IDEDD_3	:::1000	100 MHZ	39C1	40C3	
5	T_UD_IDEDD_4	:::1000	100 MHZ	39B1	40C3	
6	T_UD_IDEDD_5	:::1000	100 MHZ	39B1	40C3	
7	T_UD_IDEDD_6	:::1000	100 MHZ	39B1	40C3	
8	T_UD_IDEDD_7	:::1000	100 MHZ	39B1	40C3	
9	T_UD_IDEDD_8	:::1000	100 MHZ	39B1	40C2	
10	T_UD_IDEDD_9	:::1000	100 MHZ	39B1	40C2	
11	T_UD_IDEDD_10	:::1000	100 MHZ	39B1	40C2	
12	T_UD_IDEDD_11	:::1000	100 MHZ	39B1	40C2	
13	T_UD_IDEDD_12	:::1000	100 MHZ	39B1	40C2	
14	T_UD_IDEDD_13	:::1000	100 MHZ	39A1	40C2	
15	T_UD_IDEDD_14	:::1000	100 MHZ	39A1	40C2	
16	T_UD_IDEDD_15	:::1000	100 MHZ	39A1	40C2	

SIGNAL CONSTRAINTS

NOTICE OF PROPRIETARY PROPERTY

LAST MODIFIED=Wed May 28 20:13:01 2003
THE INFORMATION CONTAINED HEREIN IS THE PROPRIETARY PROPERTY OF APPLE COMPUTER, INC. THE POSSESSOR AGREES TO THE FOLLOWING

I TO MAINTAIN THE DOCUMENT IN CONFIDENCE

II NOT TO REPRODUCE OR COPY IT

III NOT TO REVEAL OR PUBLISH IN WHOLE OR PART

APPLE COMPUTER INC.

SIZE D | DRAWING NUMBER 051-6490 | REV. A

SCALE NONE | SHT 60 OF 74

DRAWING

FUNC_TEST

*1_8V_MAIN	FUNC_TEST	OUT	54C4							
+12V_MAIN	FUNC_TEST		53B7	53D7	54C1					
+12V_SLEEP	FUNC_TEST	OUT	38D8	41C8	44D8	46D8	47B4	47D3	47D7	50C4	50C8	50D6
+12V_SLEEPA	FUNC_TEST	OUT	51C4	51D4	51D7	52B4	52C4	52C6	52D4	52D6	53A4	53A7
+5V_MAIN	FUNC_TEST	OUT	31A3	31A8	31C5	52D6	53A4	53D6	54C1			
+5V_SLEEP	FUNC_TEST	OUT										
+2_5V_MAIN	FUNC_TEST	OUT	54C4									
+3V_MAIN	FUNC_TEST	OUT	48C7	48D6	52C6	53A5	53C5					
CPU_VCORE_SLEEP	FUNC_TEST	OUT	32A3	54C4								
JTAG_ASIC_TCK	FUNC_TEST	OUT	41D4	42D5	43A5	43A7	44A7	44D4	54C4			
JTAG_ASIC_TDI	FUNC_TEST	OUT	4D3	4D7	9B6	9C2	47B3	47C1	54C6	61B4		
JTAG_ASIC_TDO	FUNC_TEST	OUT	9A3	36B7	37C4							
JTAG_ASIC_TMS	FUNC_TEST	OUT	9A3	30C6	36B7							
JTAG_ASIC_TRST_L	FUNC_TEST	OUT	9A3	37B4								
INT_TMDS_3V	FUNC_TEST	OUT	9A3	36B7	37A2	37B4						
+1_5V_AGP	FUNC_TEST	OUT	9A3	36B7								
FAN_12V_FILT	FUNC_TEST	OUT	26B3	26C3	26C4	26D5	54A6					
+INTREPID_CORE_MAIN	FUNC_TEST	OUT	12D6	13C8	18A8	18C2	18D7	19A4	19D5	48B4	54C3	
INTREPID_VSENSE	FUNC_TEST	OUT	31A5	54B3								
OVDD_ADJ	FUNC_TEST	OUT	12D6	13D4	48B3	49B2						
CPU_CHKSTP_OUT_L	FUNC_TEST	OUT	49C6									
CPU_CHKSTP_IN_L	FUNC_TEST	OUT										
CPU_HRESET_L	FUNC_TEST	OUT	4B3	7B5	9A2	9D6						
JTAG_CPU_TCK	FUNC_TEST	OUT	4B3	7B5								
JTAG_CPU_TDI	FUNC_TEST	OUT	4B3	7A3	7A5	7B3	8D2	9A2	46C2	46D2		
JTAG_CPU_TDO	FUNC_TEST	OUT	4C3	7D5	8C2	9A2						
JTAG_CPU_TMS	FUNC_TEST	OUT	4C3	7A5	8D2	9A2						
JTAG_CPU_TRST_L	FUNC_TEST	OUT	4C3	9A2								
+MAXBUS_SLEEP	FUNC_TEST	OUT	4C3	7A5	8D2	9A2						
ROM_CS_L	FUNC_TEST	OUT	4C3	7C5	8D2	9A2						
ROM_OE_L	FUNC_TEST	OUT	4D5	6D8	7A3	7B3	7C3	7C5	7C7	8D3	9B2	9D2
ROM_RW_L	FUNC_TEST	OUT	9D4	11B8	11D8	46B7	46D1	46D2	47D2	48D4	54C6	
DDC_VCC_3	FUNC_TEST	OUT	32B4	32B6	33B4							
DDC_VCC_5	FUNC_TEST	OUT	32B2	32B6	33B2							
SND_HP_SENSE	FUNC_TEST	OUT	32B2	32B6	33B4							
ANALOG_HSYNC*	FUNC_TEST	OUT	26A5	26B3	54B6							
ANALOG_VSYNC*	FUNC_TEST	OUT	27C4	54A6								
FILT_ANALOG_BLU	FUNC_TEST	OUT	30B5	43A5								
FILT_ANALOG_RED	FUNC_TEST	OUT	24C8	27C4	27D6	28B5	59D3					
FILT_ANALOG_GRN	FUNC_TEST	OUT	24C8	27C6	28B5	59D3						
GND	FUNC_TEST	OUT	27C5	59D3								
KS_INT_SPKR+	FUNC_TEST	OUT	27C5	59D3								
KS_INT_SPKR-	FUNC_TEST	OUT	27C5	59D3								
INT_TMDS_D2P	FUNC_TEST	OUT										
INT_TMDS_D2M	FUNC_TEST	OUT	31A3	44C3	60A5							
INT_TMDS_D1P	FUNC_TEST	OUT	31A3	44C3	60A5							
INT_TMDS_D1M	FUNC_TEST	OUT	25C2	26D6	59C3							
INT_TMDS_D0P	FUNC_TEST	OUT	25C2	26D6	59C3							
INT_TMDS_D0M	FUNC_TEST	OUT	25D2	26C6	59C3							
INT_TMDS_CKP	FUNC_TEST	OUT	25D2	26C6	59C3							
INT_TMDS_CKM	FUNC_TEST	OUT	25D2	26B6	59C3							
INV_CUR_HI_FILT	FUNC_TEST	OUT	25D2	26B6	59D3							
IO_RESET_L	FUNC_TEST	OUT	25D2	26A6	59D3							
K5VSD	FUNC_TEST	OUT	31A5									
INT_I2C_CLK2	FUNC_TEST	OUT	34A6	37B8	46B5	46B8	46D3					
INT_I2C_DATA2	FUNC_TEST	OUT	31A5	54B3								
INT_ANALYZER_CLK	FUNC_TEST	OUT	30A3	30D1	31C7	36B5	41B1					
LAMP_STS_FILT	FUNC_TEST	OUT	30A3	30D1	31C7	36B5	41B1					
LCD_PWM_FILT	FUNC_TEST	OUT	9B4	11B4	18C7	56A7	58B3					
LED_5V_FILT	FUNC_TEST	OUT	31A5									
LED_RET_FILT	FUNC_TEST	OUT	31A5									
MICSHLD	FUNC_TEST	OUT	31A5	54B3								
MICHIGH	FUNC_TEST	OUT	31A5	54A3								
MICLOW	FUNC_TEST	OUT	31A5	45B8	60A5							
COMM_RESET_L	FUNC_TEST	OUT	31A5	45C8	60A5							
IIC_ADD	FUNC_TEST	OUT	31A5	45B8	60A5							
ROM_WP_L	FUNC_TEST	OUT	30C5	31D5								
		OUT	31C6									
		OUT	32A2									

FUNC_TEST

COMM_SHUTDOWN	FUNC_TEST	OUT	30C5	30D1	31D7					
MON_DETECT	FUNC_TEST	OUT	25D6	27C6						
FLO_KNOWS_BEST	FUNC_TEST	OUT	47C6	47C7	47C8					
NMI_BUTTON*	FUNC_TEST	OUT	31B2	46C4						
PWR_SWITCH*	FUNC_TEST	OUT	9A8	46B1	46C5	61D4				
PMU_RST*	FUNC_TEST	OUT	9A8	31B3	46A5	46B5				
PMURESETBUTTON*	FUNC_TEST	OUT	46A4							
PWR_SWITCH*	FUNC_TEST	OUT	9A8	46B1	46C5	61D4				
PWR_UP	FUNC_TEST	OUT	41C8	52C4	52C8	53B7	53C1	53C7		
POWER_UP*	FUNC_TEST	OUT	46C7	53A8						
RESET_BUTTON*	FUNC_TEST	OUT	31B2	46C4						
COMM_RING_DET_L	FUNC_TEST	OUT	30B5	30B8	31C5	46C5				
ROM_ONBOARD_CS_L	FUNC_TEST	OUT	32B2	33B4						
COMM_DTR_L	FUNC_TEST	OUT	30C3	31C7						
COMM_TXD_L	FUNC_TEST	OUT	30C3	31C7						
COMM_TRXC	FUNC_TEST	OUT	30C3	30D2	31C7					
COMM_RTS_L	FUNC_TEST	OUT	30C3	31D5						
COMM_RXD	FUNC_TEST	OUT	30C3	31C5						
COMM_GPIO_L	FUNC_TEST	OUT	30C3	30D2	31C5					
SLEEP	FUNC_TEST	OUT	46B5	52C4						
CPU_SRESET_L	FUNC_TEST	OUT	4B3	7A5	9A2					
PMU_AVCC	FUNC_TEST	OUT	46B5	46D4	54B3					
TMDS_DDC_CLK	FUNC_TEST	OUT	26A5	26B3						
TMDS_DDC_DAT	FUNC_TEST	OUT	26A5	26B4						
USB_DCN_CON	FUNC_TEST	OUT	35D3	58A3						
USB_DCP_CON	FUNC_TEST	OUT	35D3	58A3						
USB_DBN_CON	FUNC_TEST	OUT	35B3	58A3						
USB_DBP_CON	FUNC_TEST	OUT	35B3	58A3						
USB_DAN_CON	FUNC_TEST	OUT	35C3	58A3						
USB_DAP_CON	FUNC_TEST	OUT	35C3	58A3						
BT_USB_DP	FUNC_TEST	OUT	30B2	31D3	60B5					
BT_USB_DM	FUNC_TEST	OUT	30B2	31D3	60A5					
MODEM_USB_DP	FUNC_TEST	OUT	30B2	31C5	60A5					
MODEM_USB_DM	FUNC_TEST	OUT	30B2	31C5	60A5					
USB_PORT_PWR	FUNC_TEST	OUT	35A4	35B3	35C3	35D3	54A3			
VGA_IIC_CLK	FUNC_TEST	OUT	27C4							
VGA_IIC_DAT	FUNC_TEST	OUT	27C4							
CPU_VCORE_SLEEP	FUNC_TEST	OUT	4D3	4D7	9B6	9C2	47B3	47C1	54C6	61D7
LINE_IN_COM	FUNC_TEST	OUT	42B7							
LINE_IN_R	FUNC_TEST	OUT	42B6	42B7						
LINE_IN_SENSE	FUNC_TEST	OUT	42B7	42C7						
LINE_IN_L	FUNC_TEST	OUT	42B7	42C7						
SND_LIN_SENSE	FUNC_TEST	OUT	30B5	42D4						
OUT_R	FUNC_TEST	OUT								
LINEOUT_COMM2	FUNC_TEST	OUT								
LINE_OUT_L	FUNC_TEST	OUT								
PCIT_IRDY_L	FUNC_TEST	OUT	33B6	33C3	56C7					
RF_CLKRUN_L	FUNC_TEST	OUT	33C3							
NC_RF_DISABLE_L	FUNC_TEST	OUT								
PCI_DEVSEL_L	FUNC_TEST	OUT	32A8	32C5	33B7	34B6	56D7			
PCI_STOP_L	FUNC_TEST	OUT	32A8	32C5	33B7	34B6	56D7			
PCI_TROY_L	FUNC_TEST	OUT	32B8	32C5	33B7	34B6	56D7			
PCI_FRAME_L	FUNC_TEST	OUT	32B8	32C5	33B7	34B6	55A6			
PCI_PAR	FUNC_TEST	OUT	32C5	33B7	34B6	56D7				
WL_PCI_IDSEL	FUNC_TEST	OUT	33C2							
33SLOTB_INT_L	FUNC_TEST	OUT	30B7	33C2						
PMU_PME_L	FUNC_TEST	OUT	30B5	33C2	34A7	46B2				
PCI_SLOTB_GNT_L	FUNC_TEST	OUT	32A6	32D5	33C2					
CLK33M_PCI_SLOTB	FUNC_TEST	OUT	32D7	33C2	56D7					
PCI_SLOTB_REQ_L	FUNC_TEST	OUT	32A8	32D5	33C3					
MAIN_RESET_L	FUNC_TEST	OUT	32A2	33D4	34A6	46C4				
PCI_CBE<0>	FUNC_TEST	OUT	32C5	33B7	34B6	55A6				
PCIT_CBE<1>	FUNC_TEST	OUT	33B6	33C3	56C7					
PCIT_CBE<2>	FUNC_TEST	OUT	33B6	33C3	56C7					
PCIT_CBE<3>	FUNC_TEST	OUT	33B6	33C3	56C7					
UNUSED_GPIO15	FUNC_TEST	OUT	30B5	30C1						

FUNC_TEST

PCI_AD<0>	FUNC_TEST	OUT	32B2	32D4	33C7	34C6	55A6			
PCIT_AD<1>	FUNC_TEST	OUT	33B3	33C6	56C7					
PCIT_AD<2>	FUNC_TEST	OUT	33B2	33C6	56C7					
PCIT_AD<3>	FUNC_TEST	OUT	33B3	33C6	56C7					
PCI_AD<4>	FUNC_TEST	OUT	32B2	32D4	33C7	34C6	55A6			
PCIT_AD<5>	FUNC_TEST	OUT	33B3	33C6	56C7					
PCI_AD<6>	FUNC_TEST	OUT	32B2	32C4	33C7	34C6	55A6			
PCIT_AD<7>	FUNC_TEST	OUT	33B3	33C6	56C7					
PCIT_AD<8>	FUNC_TEST	OUT	33B3	33C6	56C7					
PCI_AD<9>	FUNC_TEST	OUT	32B2	32C4	33C7	34C6	55A6			
PCIT_AD<10>	FUNC_TEST	OUT	33B3	33C6	56C7					
PCI_AD<11>	FUNC_TEST	OUT	32B2	32C4	33C7	34C6	55A6			
PCIT_AD<12>	FUNC_TEST	OUT	33B3	33C6	56C7					
PCI_AD<13>	FUNC_TEST	OUT	32B2	32C4	33C7	34C6	55A6			
PCIT_AD<14>	FUNC_TEST	OUT	33C3	33C6	56C7					
PCI_AD<15>	FUNC_TEST	OUT	32B2	32C4	33C7	34C6	55A6			
PCI_AD<16>	FUNC_TEST	OUT	32B2	32C4	33C7	34C6	55A6			
PCIT_AD<17>	FUNC_TEST	OUT	33C3	33C7	56C7					
PCI_AD<18>	FUNC_TEST	OUT	32B2	32C4	33C7	34C6	55A6			
PCIT_AD<19>	FUNC_TEST	OUT	33C3	33C7	56C7					
PCI_AD<20>	FUNC_TEST	OUT	32B2	32C4	33C6	34C6	55A6			
PCIT_AD<21>	FUNC_TEST	OUT	33C3	33C6	56C7					
PCI_AD<22>	FUNC_TEST	OUT	32C4	33C6	34C6	55A6				
PCIT_AD<23>	FUNC_TEST	OUT	33C3	33C6	56C7					
PCI_AD<24>	FUNC_TEST	OUT	32B1	32C4	33B6	34C6	55A6			
PCIT_AD<25>	FUNC_TEST	OUT	33B6	33C3	56C7					
PCI_AD<26>	FUNC_TEST	OUT	32B1	32C4	33B6	34B6	55A6			
PCIT_AD<27>	FUNC_TEST	OUT	33B6	33C3	56C7					
PCIT_AD<28>	FUNC_TEST	OUT	33B7	33C2	56C7					
PCIT_AD<29>	FUNC_TEST	OUT	33B6	33C3	56C7					
PCI_AD<30>	FUNC_TEST	OUT	32B1	32C4	33B6	34B6	55A6			
PCIT_AD<31>	FUNC_TEST	OUT	33B6	33C3	56C7					

CONSTRINT TABLES

NOTICE OF PROPRIETARY PROPERTY

LAST_MODIFIED=Wed May 28 20:13:02 2003
THE INFORMATION CONTAINED HEREIN IS THE PROPRIETARY PROPERTY OF APPLE COMPUTER, INC. THE POSSESSOR AGREES TO THE FOLLOWING

I TO MAINTAIN THE DOCUMENT IN CONFIDENCE

II NOT TO REPRODUCE OR COPY IT

III NOT TO REVEAL OR PUBLISH IN WHOLE OR PART

APPLE COMPUTER INC.

SIZE	DRAWING NUMBER	REV.
D	051-6490	A
SCALE	SHT	OF
NONE	61	74

DRAWING

```
      *** Signal Cross-Reference ***
         --- for the entire design --

+1_5V_AGP       12D6 13C8 18A8 18C2 18D7 19A4 19D5
                      48B4 54C3 61C7
+1_5V_INTREPID_PLL 11D3 18D6 30D6 32D5 54D3
+1_5V_INTREPID_PLL1 30C4 54D3
+1_5V_INTREPID_PLL2 30D4 54D3
+1_5V_INTREPID_PLL3 30D4 54D3
+1_5V_INTREPID_PLL4 30D4 54D3
+1_5V_INTREPID_PLL5 18D5 54D3
+1_5V_INTREPID_PLL6 32D4 54D3
+1_5V_INTREPID_PLL7 11D2 54D3
+1_5V_INTREPID_PLL8 30D4 54D3
+1_8V_MAIN       54C4 61D7
+2.5V_ENET       37C3 37D3 37D5 54C6
+2_5V_DDR_AVDD   10D4 54D6
+2_5V_DDR_VDD    10D5 54D6
+2_5V_MAIN       32A3 54C4 61D7
+3.3VFPD         26D6 53C1 54B6
+3V_AUDIO        41D2 41D6 41D7 42C3 45C2 45D5
+3V_INTREPID_USB 30C4 54A3
+3V_INTSS_AVDD   10B7 54D6
+3V_INTSS_VDD    10B6 54D6
+3V_MAIN         41D4 42D5 43A5 43A7 44A7 44D4 54C4
                      61D7
+5VSD_T          52D7
+5V_AUDIO        41C6 41D7 43B8
+5V_HP           43A8 43B7 43D5
+5V_MAIN         54C4 61D7
+5V_SLEEP        48C7 48D6 52C6 53A5 53C5 61D7
+12VSD_FILT      31A5 54B3
+12VSD_T         52D7
+12V_DROPPED     46D8
+12V_MAIN        38D8 41C8 44D8 46D8 47B4 47D3 47D7
                      50C4 50C8 50D6 51C4 51D4 51D7 52B4
                      52C4 52C6 52D4 52D6 53A4 53A7 53B7
                      53D7 54C1 61D7
+12V_SLEEP       31A3 31A8 31C5 52D6 53A4 53D6 54C1
                      61D7
+12V_SLEEPA      61D7
+INTREPID_CORE_MAIN 12D6 13D4 48B3 49B2 61C7
+MAXBUS_SLEEP    4D5 6D8 7A3 7B3 7C3 7C5 7C7 8D3 9B2
                      9D2 9D4 11B8 11D8 46B7 46D1 46D2
                      47D2 48D4 54C6 61C7
3.8VH_TRICKLE    46C1 46D7 54B3
3.8V_TRICKLE     46C2 46C6 46D7 52D6 54C1 54C2
3_5_HONKER       53C4
3_6V_SLEEP       39D1 53C1
5V_USB_FUSED     35A7
5V_XRA           52B4
25V_BSTH         51C5 51C6
25V_BSTH_TERM    51C5
25V_COMP         51B6
25V_COMP_DWN     51B6
25V_DH           51B5
25V_DHT          51B5
25V_DL           51B5
25V_DLT          51B4
25V_GND          51B6
25V_NET99        51C3
25V_OCSET        51C5
25V_OVP          51B6
25V_VCC          51C6
25V_VPWR         51B5 51C5
25V_VPWRA        51B4
25V_VSENSE       51C3 51C5
25_CORE_1        51C3
33PCI_SLOTD_SERR_L 34B6
33SLOTB_INT_L    30B7 33C2 61A4
2059_IIC_CLK     10C5
2059_IIC_DAT     10C5
A0_IIC_MCK       10A4 10C5
A1_IIC_MCK       10A4 10C5
AGND             54C4
AGPIO_VPWR       48B6
AGP_AD<31..0>    18B4 18C4 19C8 19D8 56C7
AGP_AD_STB<1..0> 18A4 18B3 19B8 56C7
AGP_AD_STB_GPUUF<1..0> 19B7 56B7
AGP_AD_STB_L<1..0> 18A4 18D1 19B8 56C7
AGP_AD_STB_L_GPUUF<1..0> 19B7 56B7
```

```
AGP_BUSY_L      18C6 18D1 18D3 19A8 56B7
AGP_CBE<3..0>   18B4 19C8 56C7
AGP_DEVSEL_L    18B4 18C3 19B8 56C7
AGP_FBI_EQUAL   18C7 56A7
AGP_FBO_EQUAL   18B7 56A7
AGP_FB_PLUS2    18B8 56A7
AGP_FRAME_L     18B4 18C3 19B8 56C7
AGP_GNT_L       18C3 18C4 19B7 56B7
AGP_INT_L       19B7 30B5 30B8
AGP_IRDY_L      18B4 18C3 19B8 56C7
AGP_PAR         18B4 19B8 56B7
AGP_PIPE_L      18A4 18B3 19B8 56B7
AGP_PLLVDD      19C5
AGP_RBF_L       18A4 18B3 19B8 56B7
AGP_REQ_L       18C3 18C4 19B7 56B7
AGP_RESET_L     19C7 46D3
AGP_SBA<7..0>   18A4 18B1 18B4 18C1 19A8 56B7
AGP_SB_STB      18A4 18B3 19A8 56B7
AGP_SB_STB_L    18A4 18D1 19A8 56B7
AGP_ST<2..0>    18A4 18B1 19B7 56B7
AGP_STOP_L      18B3 18B4 19B8 56C7
AGP_TRDY_L      18B3 18B4 19B8 56C7
AGP_WBF_L       18A6 18B1 19B8 56B7
AINLM           41C4
AINLP           41C4
AINRM           41C4
AINRP           41C4
ALTCHGND        54C4
AMPBIAS         44B6
AMPDC1          44B6
AMPDC2          44B6
AMPFAULT        44B6 44B8
AMPPUMP         44B6
AMPRREF         44B6
ANALOGGND       54C4
ANALOG_BLU      24C5 24C8 27C6 59D3
ANALOG_GRN      24C5 24C8 27C6 59D3
ANALOG_HSYNC*   24C8 27C4 27D6 28B5 59D3 61B7
ANALOG_RED      24C5 24C8 27B6 59D3
ANALOG_VSYNC*   24C8 27C6 28B5 59D3 61B7
ANEN            37C4
AOUTL           41C1 43D7 44B8
AOUTR           41C1 43C7 44C8
ASH             45B6
AUDIO_SPKR_ID_B 44C4
AUDIO_TO_SND    30B2 30B3 41C1
AUD_AMP_5V      44B8 44C6
AUD_R_FB        41D6
BB_MISO         8B4 8B6
BB_MOSI         8B4 8B5 8B6
BB_SCK          8B4 8B6
BFR_HRESET_L    8B4 8C6
BRCLKO          30A5
BRE             47C5
BRE_1           47B5
BT1             46D6 53A5
BT1_LED         53A5
BT_USB_DM       30B2 31D3 60A5 61B4
BT_USB_DP       30B2 31D3 60B5 61B4
C412P1          43B3
C756_2          42D3
C4237P2         42C4
C4240P2         42C4
C4242P2         42B4
C4243P2         42B4
CAP_PLL         41B4
CD_CS1FX_L      40C6 60C5
CD_CS3FX_L      40C6 60C5
CD_DMACK_L      39D4 40C6 60D5
CD_DMARQ        40C6 60D5
CD_DSTB_RDY     39C4 40C6 60D5
CD_EIDE_ADDR<2..0> 40C6 60C5
CD_HSTB_RDY     39C4 40C6 60D5
CD_RESET_L      39D4 40C6 60D5
CD_STOP         39D4 40C6 60D5
CHGND           54C4
CLK18M_INT_EXT  30B6
CLK18M_INT_XIN  30A5
CLK18M_INT_XO   30A6
CLK18M_INT_XOUT 30A5
CLK25M_ENET_XIN 37B6 59B3
```

```
CLK25M_ENET_XOUT 37B6 59B3
CLK33M_PCI_SLOTB 32D7 33C2 56D7 61A4
CLK33M_PCI_SLOTB_UF 32C5 56D7
CLK33M_PCI_SLOTC_UF 32C5 56D7
CLK33M_PCI_SLOTD 32D7 34A6 56A7
CLK33M_PCI_SLOTD_UF 32C5 56D7
CLK66M_GPU_AGP  18D8 19C7 56A7
CLK66M_GPU_UF   18C6 56A7
CLKENET_LINK_GBE_REF 36C6
CLKENET_LINK_RX 36C7 37C8 59C3
CLKENET_LINK_TX 36D7 37C8 59C3
CLKENET_PHY_RX  37C6 59C3
CLKENET_PHY_TX  37C6 59C3
CLKFW_LINK_LCLK 36C5
CLKGEN_OUT_1    10A6 55A6
CLK_18M_INT_XOUT 60B5
COLE            48C7
COMM_DTR_L      30C3 31C7 61C4
COMM_GPIO_L     30C3 30D2 31C5 61C4
COMM_RESET_L    30C5 31D5 61A7
COMM_RING_DET_L 30B5 30B8 31C5 46C5 61D4
COMM_RTS_L      30C3 31D5 61C4
COMM_RXD        30C3 31C5 61C4
COMM_SHUTDOWN   30C5 30D1 31D7 61D4
COMM_TRXC       30C3 30D2 31C7 61C4
COMM_TXD_L      30C3 31C7 61C4
CORE_MOSFET     47C4 47C6
CORE_MOSFET_1   47B5 47C7
CPU_AACK_L      4A7 7B7 9B6 11B3 58C3
CPU_ADDR<31..0> 4B7 4C7 9B7 9B8 9C5 9C6 9C7 9C8
                      11C3 11D3 58D3
CPU_ARTRY_L     4A7 7C7 9B8 11B3 58C3
CPU_AVDD        4D3 54C6
CPU_BG_L        4D7 7B7 9B5 11D3 58D3
CPU_BR_L        4D7 7C7 9C5 11D3 58D3
CPU_BUS_VSEL    4D3 7C4
CPU_CHKSTP_IN_L 4B3 7B5 61C7
CPU_CHKSTP_OUT_L 4B3 7B5 9A2 9D6 61C7
CPU_CI_L        4A7 7A7 9C6 11C3 58C3
CPU_CLK_EN      11A3 46C4
CPU_DATA<63..0> 5A4 5B4 5C4 5D4 9C5 9C6 9C7 9C8 9D5
                      9D6 9D7 9D8 11B1 11B5 11B8 11C1 11C5
                      11D1 11D5 11D8 58D3
CPU_DBG_L       4C3 7B7 9C8 11B1 58C3
CPU_DRDY_L      4C2 7B7 9B6 11B1 58C3
CPU_DRDY_L_UF   4C3 58C3
CPU_DTI<2..0>   4C3 9B5 9B7 11A1 58C3
CPU_EDTI        4C3 7C5
CPU_EMODE0_L    4B3 7A4
CPU_EMODE1_L    4B3 7A4
CPU_FBI_PLUS1   11A4 58C3
CPU_FBO_PLUS1   11A4 58C3
CPU_FB_MINUS3   11A4 58C3
CPU_FB_PLUS2    11A5 58C3
CPU_FB_PLUS3    11A4 58B3
CPU_GBL_L       4B8 9B6 58C3
CPU_HDRST_L     8C7 46C4
CPU_HIT_L       4A7 7C7 9B8 11B3 58C3
CPU_HRESET_L    4B3 7A3 7A5 7B3 8D2 9A2 46C2 46D2
                      61C7
CPU_INT_GBL_L   4B8 7B7 11C3 58C3
CPU_L1TSTCLK    4C3 7A4
CPU_L2TSTCLK    4C3 7C4
CPU_LSSD_MODE   4C3 7B5
CPU_MCP_L       4B3 7B5
CPU_PLL_CFG<3..0> 4C3 4D3 6C6 9A8
CPU_PLL_CFGEXT  4C3 6C6 9A8
CPU_PLL_STOP    6B8 46B8
CPU_PMONIN_L    4B3 7C5
CPU_PULLDOWN    4A3 4D7 7C5
CPU_PULLUP      4A3 7A5
CPU_QACK_L      4C3 9B5 11B3 58C3
CPU_QREQ_L      4C3 7D5 9B7 11B3 58C3
CPU_SHD0_L      4A7 7B5
CPU_SHD1_L      4A7 7B5
CPU_SLEEPIN     53B7
CPU_SMI_L       4B3 7A5 46C4
CPU_SRESET_L    4B3 7A5 9A2 61C4
CPU_STATE_LED*  46C4 53A8
CPU_TA_L        4C3 7C7 9C5 11A1 58C3
CPU_TBEN        4C3 7C5 11A3
```

```
CPU_TBST_L      4B7 7B7 9B5 11B3 58D3
CPU_TEA_L       4C3 7B7 9C6 11A1 58C3
CPU_TSIZ<2..0>  4B7 9B6 9B7 9C6 11B3 58D3
CPU_TS_L        4D7 7C7 9C7 11D3 58D3
CPU_TT<4..0>    4B7 7A7 9B5 9B6 9C5 9C6 11B3 58D3
CPU_VCORE_SLEEP 4D3 4D7 9B6 9C2 47B3 47C1 54C6 61B4
                      61D7
CPU_VCORE_SLEEPA 47C3
CPU_VCORE_SLEEPB 47A4
CPU_VCORE_SLEEPC 47A1
CPU_WT_L        4B7 7A7 9B6 11B3 58C3
CSLOT_IOWAIT_L  39B7 54A6
CVBS_CNT        24B8 25D6
CVBS_D          24B7
CY69P2          41B5
DAC2RSET        24C6 59D3
DAC2VDD         24C5 54B6
DAC2VREF        24C5 59D3
DACRSET         24C4
DACVDD          24C4 54B6
DACVREF         24C4
DDC_VCC_3       26A5 26B3 54B6 61B7
DDC_VCC_5       27C4 54A6 61B7
DDRCLK_A0_L_UF  10B3 55B6
DDRCLK_A0_UF    10C3 55B6
DDRCLK_A1_L_UF  10B3 55B6
DDRCLK_A1_UF    10C3 55B6
DDRCLK_A2_L_UF  10B3 55B6
DDRCLK_A2_UF    10C3 55B6
DDRCLK_B0_L_UF  10B3 55A6
DDRCLK_B0_UF    10C3 55B6
DDRCLK_B1_L_UF  10B3 55A6
DDRCLK_B1_UF    10C3 55B6
DDRCLK_B2_L_UF  10B3 55A6
DDRCLK_B2_UF    10C3 55B6
DDR_CK_CE       10B5
DDR_CLK_VDD_2   10C5 55B6
DDR_FBIN        10B5 55A6
DDR_FBIN_L      10B5 55A6
DDR_FBO         10B3 55A6
DDR_FBO_L       10B3 55A6
DDR_VREF        16B2 16D1 16D8 17D8 54A6
DS1P1           37B2
DS2P1           37B1
DS2_1           40B2
DS2_2           40B2
DS3P1           37B2
DS6_1           40B6
DS6_2           40B6
DUKE_BD         47B5
DVOCLKIN        24C5
DVOD0           24B5 29B7
DVOD1           24B5 29B7
DVOD2           24B5 29C7
DVOD3           24B5 29C7
DVOD4           24B5 29C7
DVOD5           24B5 29C7
DVOD6           24B5 29C7
DVOD7           24B5 29C7
DVOD8           24B5 29C7
DVOD9           24B5 29C7
DVOD10          24B5 29C7
DVOD11          24B5 29C7
DVODE           24C5
DVOHSYNC        24C5 28D7
DVOVREF         24C5
DVO_PD          24B5
DVO_PU          24B5
EEPR_WP         8A6
EIDE_ADDR<2..0> 39B7 40A8 40B8 60C5
EIDE_CS1FX_L    39A7 40B8 60C5
EIDE_CS3FX_L    39A7 40B8 60C5
EIDE_CSELP_L    40C6 54A6
EIDE_DATA<15..0> 39A5 39B5 39B7 39C5 60D5
EIDE_DMACK_L    39A7 39D5 60D5
EIDE_DMARQ      39A7 40C8 60D5
EIDE_DSTB_RDY   39A7 39C5 60D5
EIDE_HSTB_RDY   39A7 39C5 60D5
EIDE_INTRQ      39A7 40C8 60C5
EIDE_IOCS16_L   40C6 54A6
EIDE_PDIAG      40C6
```

NOTICE OF PROPRIETARY PROPERTY

THE INFORMATION CONTAINED HEREIN IS THE PROPRIETARY PROPERTY OF APPLE COMPUTER, INC. THE POSSESSOR AGREES TO THE FOLLOWING

I TO MAINTAIN THE DOCUMENT IN CONFIDENCE

II NOT TO REPRODUCE OR COPY IT

III NOT TO REVEAL OR PUBLISH IN WHOLE OR PART

APPLE COMPUTER INC.

SIZE D | DRAWING NUMBER 051-6490 | REV. A

SCALE NONE | SHT 62 OF 74

```
EIDE_RST_L      39A7 39D5 60D5
EIDE_STOP       39A7 39D5 60D5
ENET_COL        36B7 37B8 59B3
ENET_CRS        36C7 37B8 59B3
ENET_ENERGY_DET 30B5 30C1 37B4
ENET_LINK_RXD<7..0> 36C6 36C7 37B8 37C8 59B3
ENET_LINK_TXD<3..0> 36C6 59C3
ENET_LINK_TX_EN 36D6 59C3
ENET_LINK_TX_ER 36D6 59C3
ENET_MDC        36B7 37B6
ENET_MDIO       36B7 37B7
ENET_PHY_COL    37B6 59B3
ENET_PHY_CRS    37B6 59B3
ENET_PHY_RXD<3..0> 37B6 37C6 59B3
ENET_PHY_RX_DV  37B6 59B3
ENET_PHY_RX_ER  37B6 59B3
ENET_PHY_TXD<3..0> 36C7 37C6 59C3
ENET_PHY_TX_EN  36D7 37C6 59C3
ENET_PHY_TX_ER  36D7 37C6 59C3
ENET_RDAC_PD    37B5
ENET_RDN        37C3 59B3
ENET_RDP        37C3 59B3
ENET_RX_DV      36C7 37B8 59B3
ENET_RX_ER      36C7 37B8 59B3
ENET_TDN        37C3 59B3
ENET_TDP        37C3 59B3
ETHPHYRESET_L   37B6
EXTINT14        30A8 30B5
FAN_12V_FILT    31A5 54B3 61C7
FBA<12..0>      20C8 20D8 20E3 20F3 57D3
FBABA<1..0>     20C8 20E3 57D3
FBACAS_L        20C8 20G3 57D3
FBACKE          20D3 20D7 57D3
FBACLK0         20D7 21C3 57C3
FBACLK0_L       20D7 21C3 57C3
FBACLK1         20D7 21D3 57C3
FBACLK1_L       20D7 21D3 57C3
FBACS0_L        20C8 20F3 57D3
FBARAS_L        20C8 20G3 57D3
FBAWE_L         20C8 20F3 57D3
FBBA<12..0>     20A3 20B3 20C3 20C5 20D5 57C3
FBBBA<1..0>     20A3 20C5 57C3
FBBCAS_L        20C3 20D4 57C3
FBBCKE          20A3 20C4 57B3
FBBCLK0         20C5 21B3 57B3
FBBCLK0_L       20C5 21B3 57B3
FBBCLK1         20C5 21C3 57B3
FBBCLK1_L       20C5 21B3 57B3
FBBCS0_L        20C3 20C4 57C3
FBBRAS_L        20C3 20D4 57C3
FBBWE_L         20C3 20D4 57C3
FBCAL_CLK_GND   20A5 20D7
FBCAL_PD_VDDQ   20D7
FBCAL_PU_GND    20A5 20D7
FBCAL_TERM_GND  20A5 20D7
FBD<127..0>     20E5 20E8 20F5 20F8 20G5 20G8 21B5
                21B8 21C5 21C8 21D5 21D8 57C3 57D3
FBDQM<15..0>    20C3 20D3 20D5 20D8 20G3 57C3 57D3
FBDQS<15..0>    20C7 20D4 21A5 21A8 57B3 57C3
FBDQSTERM<15..0> 21A4 21A7 57B3 57C3
FB_DLLVDD       20C6 20D7
FDC602          48B7
FDX             37A5 37C4
FILT_ANALOG_BLU 27C5 59D3 61B7
FILT_ANALOG_GRN 27C5 59D3 61B7
FILT_ANALOG_RED 27C5 59D3 61B7
FIX_RESET_L     8B6 8C4
FLOW_SS         47C7 47D8
FLO_KNOWS_BEST  47C6 47C7 47C8 61D4
FPD_PWR_ON      25D6 53B3
FPD_PWR_ON_T    53B3
FWPHYRST        30C5 38C8
FW_BIAS1        38C5 59A3
FW_BIAS2        38C5 59A3
FW_CNTL0        36C3 38C8 59A3
FW_CNTL1        36C3 38C8 59A3
FW_CPS          38C6
FW_C_LKON       30B6 36C5 38B5
FW_D<7..0>      36C3 38B8 38C8 59A3
FW_DIODE_BYPASS_V 38B6 38B7 54B6
FW_DIO_V        38B6 54B6
```

```
FW_LINK_CNTL<1..0> 36C5 59A3
FW_LINK_DATA<7..0> 36C5 59A3
FW_LINK_LREQ    36C5 59A3
FW_LPS          36C5 38C8
FW_LREQ         36C3 38C8 59A3
FW_PHY_3_3      38B5 38B7 38D7 54B6
FW_PHY_CNTL0    38C7 59A3
FW_PHY_CNTL1    38C7 59A3
FW_PHY_D<7..0>  38B7 38C7 59A3
FW_PHY_ISO*     38C6
FW_PHY_RST      38C8
FW_PHY_RST*     38C6
FW_PHY_SCLK     38C7 59A3
FW_PINT         36B5 36C1
FW_PWR          52C7 53D3 54B6
FW_PWR_SW       38D6 53D1 54B6
FW_R0           38C5
FW_R1           38C5
FW_SCLK         36C5 38C8 59A3
FW_TPA1N        38C5 59A3
FW_TPA1P        38C5 59A3
FW_TPA2N        38C5 59A3
FW_TPA2P        38C5 59A3
FW_TPB1         38B3
FW_TPB1N        38C5 59A3
FW_TPB1P        38C5 59A3
FW_TPB2         38B4
FW_TPB2N        38C5 59A3
FW_TPB2P        38C5 59A3
FW_TPI1N        38A8 38D1 59A3
FW_TPI1P        38A8 38D1 59A3
FW_TPI2N        38A8 38C1 59A3
FW_TPI2P        38A8 38C1 59A3
FW_TPO1N        38A8 38D1 59A3
FW_TPO1P        38B8 38D1 59A3
FW_TPO2N        38A8 38C1 59A3
FW_TPO2P        38A8 38C1 59A3
FW_VGND         38D1 54B6
FW_VP           38D5 54B6
FW_VP1          38D1 38D3 54B6
FW_VP2          38C1 38D3 54B6
FW_VP_1         38D4 54B6
FW_VP_2         38D4 54B6
FW_VREG_FB      38D7
FW_XI           38C6 59A3
FW_XI_A         38C6
FW_XO           38C6 59A3
GCORE_1         50C2
GCORE_2         50C3
GCORE_BSTH      50C5
GCORE_BSTH_TERM 50C3
GCORE_COMP      50B6
GCORE_DH        50B5
GCORE_DL        50B5
GCORE_GND       50B5
GCORE_OCSET     50B6
GCORE_OVP       50B6
GCORE_VCC       50C6
GCORE_VSENSE    50B6 50C2
GPULNKON        25C4
GPU_50PULLDWN   19A5 54A6
GPU_50PULLUP    19A5 54A6
GPU_AGP_AD<31..0> 19C7 19D7 56B7
GPU_AGP_CBE<3..0> 19C7 56B7
GPU_AGP_DEVSEL_L 19B7 56B7
GPU_AGP_FRAME_L 19B7 56B7
GPU_AGP_IRDY_L  19B7 56B7
GPU_AGP_PAR     19B7 56B7
GPU_AGP_PIPE_L  19B7 56A7
GPU_AGP_RBF_L   19B7 56A7
GPU_AGP_SBA<7..0> 19A7 56A7
GPU_AGP_SB_STB  19A7 56A7
GPU_AGP_SB_STB_L 19A7 56A7
GPU_AGP_STOP_L  19B7 56B7
GPU_AGP_TRDY_L  19B7 56B7
GPU_AGP_VREF    19A3 19A8 54A6
GPU_AGP_VREF_H  18A8
GPU_AGP_VREF_L  18A8
GPU_AGP_VREF_X  19A3
GPU_AGP_VREF_Y  19A3
GPU_AGP_WBF_L   19B7
```

```
GPU_FB_VREF     20C8 54A6
GPU_FPBCLK      25C4
GPU_FPBCLK_L    25C4
GPU_FW_PME_L    25C4
GPU_IFB1IOVDD   25B2
GPU_IFP1PLLVDD  25B2
GPU_MBDET_L     19A7
GPU_STEREO      25C4
GPU_STRAP<3..0> 24B4 28A3 28B3 28D3
GPU_SWAP_A      25C4
GPU_SWAP_B      25C4
GPU_TESTMECLK   25C4
GPU_TMODE       19A5 54A6
GPU_XTALSSIN    24B4 54A6
GPWRGD          49B6 49B8 50A5
GRAPHICS_VPWR   50B5
GRAPH_CORE      19D5 25C4 25C6 50B1 54A6
GRAPH_DDC_SCL   24D5 26A6
GRAPH_DDC_SDA   24D5 26A6
GRAPH_IIC_SCL2  25D2
GRAPH_IIC_SDA2  25D2
HD_DIOR_L       39D1 40C3 60C5
HD_DIOW_L       39C1 40C3 60C5
HD_DMACK_L      39D1 40C3 60C5
HD_DMARQ        40C3 60C5
HD_INTRQ        40C3 60C5
HD_IOCHRDY      39C1 40C3 60C5
HD_RESET_L      39D1 40C3 60C5
HD_UIDE_ADDR<2..0> 40C2 40C3 60C5
HD_UIDE_CS1FX_L 40C3 60B5
HD_UIDE_CS3FX_L 40C2 60B5
HEADPHONE_COM   43B2
HEADPHONE_L     43B2 43D2
HEADPHONE_R     43B2 43C2
HONK_ADJ        53B4
HP16_L          43D4
HP16_R          43C4
HPBYP           43B5 43D6
HPGAL_L         43D4
HPGAL_R         43C4
HPIN_L          43D6
HPIN_R          43D6
HP_OFF          43A7 43D5
HP_OUT_L        43D5
HP_OUT_R        43D5
HP_STAR_GND     41B7 43A8 43B4 43B8 43C5 43D4 43D7
HP_TL           43D3
HP_TP           43B3
HP_TR           43C3
HRST_REF        8B4 8B7
HSYNC*          24C5 59D3
ICORE_COMP      49B6
ICW             49B7
IFP0AVCC        25A6 25B4 54A6
IFP0PLLVDD      25B4
IFP0RSET        25B4
IFP0VREF        25B4 54A6
IFP_AVCC        25A7
IFP_VADJ        25A8
IIC A<2..0>     8A6 8A7
IIC_ADD         31C6 61A7
IMAC_INTREPID   49B4
INTCORE_1       49B3
INTCORE_BSTH    49B6
INTCORE_BSTH_TERM 49B6
INTCORE_DH      49B6
INTCORE_DHT     49B5
INTCORE_DL      49B6
INTCORE_GND     49A7
INTCORE_NET99   49B4
INTCORE_OCSET   49B6
INTCORE_OVP     49B6
INTCORE_VCC     49C7
INTREPID_ACS_REF 11A3
INTREPID_VPWR   49B6
INTREPID_VPWRA  49B4
INTREPID_VSENSE 49C6 61C7
INTREP_DLT      49B5
INT_AGPPVT      18C6
INT_AGP_FB_IN   18C6 56A7
INT_AGP_FB_OUT  18C6 56A7
```

```
INT_AGP_VREF    18A7 18C6 54C3
INT_ANALYZER_CLK 9B4 11B4 18C7 56A7 58B3 61A7
INT_ANALYZER_CLKA 11B3
INT_CLOCK_OUT   9C4 58B3
INT_CPU_FB_IN   11B3 58C3
INT_CPU_FB_OUT  11B3 58C3
INT_ENET_RST_L  30B5 30D1 37B8
INT_EXTINT3_PU  30B5 30B8
INT_EXTINT12_PU 30B5 30B8
INT_EXTINT13_PU 30B5 30B8
INT_EXTINT17_PU 30B5 30B8 34B6
INT_GPIO1_PD    30A8 30C5
INT_GPIO9_PU    30B5 30B8
INT_GPIO12_PU   30A8 30B5
INT_I2C_CLK0    8A6 8B4 8B7 10C7 16A6 17A6 36B3
INT_I2C_CLK0R   36B5 36C1
INT_I2C_CLK1    10A7 36A3 36A4 36B1
INT_I2C_CLK2    30A3 30D1 31C7 36B5 41B1 61A7
INT_I2C_DATA0   8A6 8B4 8B7 10C7 16A6 17A6 36B3
INT_I2C_DATA0R  36B5 36C1
INT_I2C_DATA1   10A7 36A3 36B1
INT_I2C_DATA2   30A3 30D1 31C7 36B5 41B1 61A7
INT_JTAG_TEI    36B7 36C1
INT_MEM_REF     14B6
INT_MOD_BITCLK  30A3 30A8 30C6
INT_MOD_CLKOUT  30A3 30A8 30C6
INT_MOD_DTI     30A3 30A8 30C6
INT_MOD_DTO     30A3 30A8 30C6
INT_MOD_SYNC    30A3 30A8 30C6
INT_PCI_FB_IN   32C5 56C7
INT_PCI_FB_OUT  32C5 56D7
INT_PEND_PROC_INT 30A5 46B4
INT_PLL1_GND    30A5 30C4
INT_PLL2_GND    30A5 30D4
INT_PLL3_GND    30A4 30D4
INT_PLL4_GND    32B4 32D4
INT_PLL5_GND    18A5 18D5
INT_PLL6_GND    11A2 11D3
INT_PLL7_GND    30A4 30D4
INT_PLL9_GND    30A4 30D4
INT_PROC_SLEEP_REQ_L 30A5 46B4
INT_PU_RESET_L  36C3 46C2 46C4
INT_REF_CLK_IN_PD 10A5 30A6 55A6
INT_REF_CLK_OUT 10A7 30A6 55A6
INT_REF_CLK_OUT_UF 55A6
INT_RESET_L     36C3 37B8 43A7 44A8 46D2 46D4
INT_ROM_CS_L    32C5
INT_ROM_OE_L    32C5
INT_ROM_OVERLAY_PU 18D7 32A8 32C5 56A7
INT_ROM_RW_L    32C5
INT_SND_CLKOUT  30A3
INT_SND_SCLK    30A3
INT_SND_SYNC    30B3
INT_SND_TO_AUDIO 30B3
INT_SPKR+       44B1
INT_SPKR-       44B1
INT_SUSPEND_ACK_L 11B3 46B5
INT_SUSPEND_REQ_L 11B3 46B5 46B8
INT_TMDS_3V     26B3 26C3 26C4 26D5 54A6 61C7
INT_TMDS_CKM    25D2 26A6 59D3 61A7
INT_TMDS_CKP    25D2 26B6 59D3 61A7
INT_TMDS_D0M    25D2 26B6 59C3 61A7
INT_TMDS_D0P    25D2 26B6 59C3 61B7
INT_TMDS_D1M    25D2 26C6 59C3 61B7
INT_TMDS_D1P    25D2 26C6 59C3 61B7
INT_TMDS_D2M    25C2 26D6 59C3 61B7
INT_TMDS_D2P    25C2 26D6 59C3 61B7
INT_TST_MONIN_PD 36B7 36C1
INT_TST_PLLEN_PD 30C6 36B7 36C1
INT_WATCHDOG_L  30A5 46C5
INV_BFR_HRST    8D6
INV_CUR_HI      25D6 31B8
INV_CUR_HI_FILT 31A5 61A7
IO_RESET_L      34A6 37B8 46B5 46B8 46D3 61A7
IPWRGD          48A8 49A6
IPWR_D          48A7
JAZ             45C6
JTAG_ASIC_TCK   9A3 36B7 37C4 61D7
JTAG_ASIC_TDI   9A3 36C6 36B7 61D7
JTAG_ASIC_TDO   9A3 37B4 61D7
JTAG_ASIC_TMS   9A3 36B7 37A2 37B4 61D7
```


NOTICE OF PROPRIETARY PROPERTY

THE INFORMATION CONTAINED HEREIN IS THE PROPRIETARY PROPERTY OF APPLE COMPUTER, INC. THE POSSESSOR AGREES TO THE FOLLOWING

I TO MAINTAIN THE DOCUMENT IN CONFIDENCE

II NOT TO REPRODUCE OR COPY IT

III NOT TO REVEAL OR PUBLISH IN WHOLE OR PART

APPLE COMPUTER INC.

SIZE	DRAWING NUMBER	REV.
D	051-6490	A
SCALE: NONE	SHT 63 OF 74	

```
JTAG_ASIC_TRST_L 9A3 36B7 61C7
JTAG_CPU_TCK     4C3 7D5 8C2 9A2 61C7
JTAG_CPU_TDI     4C3 7A5 8D2 9A2 61C7
JTAG_CPU_TDO     4C3 9A2 61C7
JTAG_CPU_TMS     4C3 7A5 8D2 9A2 61C7
JTAG_CPU_TRST_L 4C3 7C5 8D2 9A2 61C7
JTAG_ENET_TDI    30C6 36B7 37A2 37B4
KAVAN            45B6
KS5VSD           31A5 54B3 61A7
KS_INT_SPKR+     31A3 44C3 60A5 61B7
KS_INT_SPKR+_FILT 31A5
KS_INT_SPKR-     31A3 44C3 60A5 61B7
KS_INT_SPKR-_FILT 31A5
KYLE             48C6
L31_2            42C6
L32_2            42B6
L36_2            42B6
L43_1            43A4
L3202_1          42C6
LAMP_STS         25D6 31A3
LAMP_STS_FILT    31A5 61A7
LCD_PWM          25D6 31A8
LCD_PWM_FILT     31A5 61A7
LED_5V           31A8 54B3
LED_5V_FILT      31A5 54B3 61A7
LED_RET          31A3 53B6 54B3
LED_RET_FILT     31A5 54A3 61A7
LED_ROMCS        32A3
LED_ROMCS_L      32A4
LED_ROMCS_LIGHT 32A3
LID_SWITCH       31B2 46C4
LINA             41C4 42C2
LINEOUT_COMM2    61B4
LINE_IN_COM      42B7 61B4
LINE_IN_L        42B7 42C7 61B4
LINE_IN_R        42B6 42B7 61B4
LINE_IN_SENSE    42B7 42C7 61B4
LINE_OUT_L       61B4
LINSENSE         42C5
LOW_PWR          37A5 37B4
LO_T1            43A4
LP4202P2         42C5
LP4202P3         42B5
LP4202P4         42B5
LPL1             43D6
LPR1             43C6
LSPKRCAP         44B8
LSPKRIN2         44B6
LSPKRVP2         44B6
LT1962_INT_ADJ   30D7
LT1962_INT_BYP   30D7
LT1962_INT_VIN   30D7
LY4P2            44C3
M1FH             45C7
M1FL             45B7
M1H              45C6
M1HFILT          45C5
M1L              45B6 45C6
M1S              45B5 45C6
MAIN_RESET_L     32A2 33D4 34A6 46C4 61A4
MAIN_RESET_L_PU 33D3
MAIN_SUPPLY_LED 52D6
MEMI_VREF        14A6
MEMREFG1         22A5
MEMREFG2         22A4
MEMREFG3         23A5
MEMREFG4         23A4
MEMREFI1         14A8
MEMREFI2         14A7
MEMREFM1         16B3
MEMREFM2         16B2
MEMREFN1         20B8
MEMREFN2         20B7
MEM_ADDR<12..0> 14A3 14B3 14C2 14C3 14D2 14D3 14D6
                 55D6
MEM_BA<1..0>     14B3 14D6 55D6
MEM_CAS_L        14A3 14C6 55C6
MEM_CKE<3..0>    14A2 14B2 14B6 14C2 14C6 55C6
MEM_CS_L<3..0>   14A2 14B2 14C2 14C6 55D6
MEM_DATA<63..0> 14B8 14C8 14D8 15A6 15B3 15B6 15C5
                 15C8 55D6
```

```
MEM_DQM<7..0>    14C6 15A6 15B3 15C5 15C8 55D6
MEM_DQS<7..0>    14C6 15A6 15B3 15C5 15C8 55D6
MEM_MUXSEL_H<1..0> 14B6 14D5 55C6
MEM_MUXSEL_L<1..0> 14B6 14D5 55C6
MEM_RAS_L        14A3 14C6 55C6
MEM_WE_L         14A3 14C6 55C6
MIC1             45C4
MIC1S1           45B7
MIC2             45C4
MIC3             45C4
MIC4             45C3
MIC5             45B3
MICHIGH          31A5 45C8 60A5 61A7
MICLOW           31A5 45B8 60A5 61A7
MICSHLD          31A5 45B8 60A5 61A7
MIC_FIX          45D5
MIC_IN           41C4 45C2
MIC_TDO          8B3
MII_EN           37C4
MODEM_USB_DM     30B2 31C5 60A5 61B4
MODEM_USB_DP     30B2 31C5 60A5 61B4
MON_DETECT       25D6 27C6 61D4
MON_I2C_SCL      24D5 27B6
MON_I2C_SDA      24D5 27B6
MPIC_CPU_INT_L   4B3 7A5 9D7 30B5
MPWRGD           50B6 50B7 51B5
MR_FLO           47C5
MR_FLO_1         47B4
MUTE_B_L         44B8
MUX_SEL_H        14D4 15A3 15C5 55C6
MUX_SEL_L        14D4 15A6 15C8 55C6
M_SPD_WP         17A7
M_VDDID          17A7
NCVR4            41D6
NC_-10VUNREG     31C6
NC_-12VREG       31C6
NC_28512P4       10A7
NC_28512P14      10A7
NC_28512P17      10A7
NC_AMPOL         44B6
NC_ATXTAL1       8C4
NC_ATXTAL2       8B4
NC_AUDIO2MODEM   31C6
NC_AUDIO2MODEMRTN 31C6
NC_AUD_MODEM     31C6
NC_AUD_MODEM_RTN 31C6
NC_BIGDIMM9      17D6
NC_BIGDIMM10     17D6
NC_BIGDIMM44     17C6
NC_BIGDIMM45     17B6
NC_BIGDIMM47     17B6
NC_BIGDIMM49     17B6
NC_BIGDIMM51     17B6
NC_BIGDIMM71     17A6
NC_BIGDIMM101    17D4
NC_BIGDIMM102    17D4
NC_BIGDIMM103    17D4
NC_BIGDIMM113    17C4
NC_BIGDIMM134    17C4
NC_BIGDIMM135    17C4
NC_BIGDIMM140    17B4
NC_BIGDIMM142    17B4
NC_BIGDIMM144    17B4
NC_BIGDIMM163    17A4
NC_BIGDIMM167    17A4
NC_BIGDIMM173    17A4
NC_BS1           31B7
NC_BS2           31B6
NC_BS3           31D1
NC_BS4           31D1
NC_BT1           31D2
NC_BT3           31D2
NC_BT4           31D2
NC_BT5           31D2
NC_BT6           31D2
NC_CBUS_INT_L    30A8
NC_CLK33M_PCI_SLOTC 32D7
NC_CLKENET_LINK_GTX 36C6
NC_CPUAP<4..0>   4B7
NC_CPUCRUD<89..0> 5A7 5B7 5C7 5D7
NC_CPUDP<7..0>   5A4
```

```
NC_CPU_CLKOUT    4D3
NC_CSLOT_ADDR<9..3> 39A7 39B7
NC_CSLOT_CE1_L   39C7
NC_CSLOT_CE2_L   39C7
NC_CSLOT_IORD_L 39C7
NC_CSLOT_IOWR_L 39C7
NC_CSLOT_OE_L    39B7
NC_CSLOT_WE_L    39B7
NC_DAA_CLKOUT    31C6
NC_DAA_LOADOUT   31C6
NC_DACC_BLU      24C4
NC_DACC_GRN      24C4
NC_DACC_RED      24C4
NC_DACC_RSET     24C4
NC_DDRCLK1       10C3
NC_DDRCLK2       10C3
NC_DDRCLK3       10C3
NC_DDRCLK4       10C3
NC_DDRCLK5       10C3
NC_DDRCLK6       10C3
NC_DDRCLK7       10C3
NC_DDRCLK8       10C3
NC_DDRCLK9       10C3
NC_DDRCLK10      10C3
NC_DDRCLK11      10B3
NC_DDRCLK12      10B3
NC_DDRCLK13      10B3
NC_DDRCLK14      10B3
NC_DDRCLK_A2     10C2
NC_DDRCLK_A2_L   10C2
NC_DFPCLK        25C2
NC_DFPCLK*       25C2
NC_DFPD0         25C2
NC_DFPD1         25C2
NC_DFPD2         25C2
NC_DFPD3         25C2
NC_DFPD5         25B2
NC_DFPD6         25B2
NC_ENET_LINK_TXD<7..4> 36C6
NC_EXT_TMDS_CKM 25C2
NC_EXT_TMDS_CKP 25C2
NC_EXT_TMDS_D0M 25C2
NC_EXT_TMDS_D0P 25C2
NC_EXT_TMDS_D1M 25C2
NC_EXT_TMDS_D1P 25C2
NC_EXT_TMDS_D2M 25C2
NC_EXT_TMDS_D2P 25C2
NC_FB1<10..0>    22B5 22B6
NC_FB2<10..0>    22B1 22B2
NC_FB3<10..0>    23B5 23B6
NC_FB4<10..0>    23B1 23B2
NC_FBACS1_L      20C8
NC_FBBCS1_L      20C4
NC_FBDQS_L<15..0> 20C7 20D4
NC_FMAX7         9A8
NC_FMAX8         9A8
NC_FW_CNA        38B6
NC_GPU<4..0>     19A6
NC_GPULPS        25C4
NC_GPU_DBI_LO    19B7
NC_GPU_INTB_L    19B7
NC_GPU_THERMA    25C4
NC_GPU_THERMC    25C4
NC_IFP1RSET      25B2
NC_IFP1VREF      25B2
NC_INPA          41C2
NC_INT_TST_MONOUT_TP 36B6
NC_JTAG7         9A3
NC_JTAG10        9A2
NC_LCENABLE      9A3
NC_MODEM_DETECT_L 31C6
NC_NVAGP_TDI     19A5
NC_NVAGP_TDO     19A5
NC_NVAGP_TMS     19A5
NC_P00_D0        46D5
NC_P01_D1        46D5
NC_P02_D2        46C5
NC_P03_D3        46C5
NC_P04_D4        46C5
NC_P05_D5        46C5
NC_P6_D6         46C5
```

```
NC_P07_D7        46C5
NC_P10_D8        46C5
NC_P11_D9        46C5
NC_P14_D12       46C5
NC_P20_A0_D0     46C5
NC_P21_A1_D1_D0 46C5
NC_P22_A2_D2_D1 46C5
NC_P23_A3_D3_D2 46C5
NC_P24_A4_D4_D3 46C5
NC_P25_A5_D5_D4 46C5
NC_P26_A6_D6_D5 46C5
NC_P27_A7_D7_D6 46C5
NC_P33_A11       46B5
NC_P34_A12       46B5
NC_P35_A13       46B5
NC_P36_A14       46B5
NC_P37_A15       46B5
NC_P43_A19       46B5
NC_P45_CS1_L     46B5
NC_P74_TA2OUT_W 46C4
NC_P75_TA2IN_W   46C4
NC_P76_TA3OUT    46C4
NC_P77_TA3IN     46C4
NC_P92_TB2IN_SOUT3 46B4
NC_P93_DA0_TB3IN 46B4
NC_P96_ANEX0_CLK4 46B4
NC_P103_AN3      46B4
NC_PCIR0         33B7
NC_PCIR1         33B7
NC_PCITR0        33B6
NC_PCITR1        33B6
NC_PD0           8B3
NC_PMON_OUT_L    4B3
NC_PMU_DL_10     31B2
NC_PMU_DL_12     31B2
NC_PPL*          46C6
NC_RESET_BUTTON_L 9A8
NC_RFBA<12..12> 20E2
NC_RFBBA<12..12> 20A2
NC_RF_DISABLE_L 61A4
NC_ROMCS_L       20C8
NC_RP1PIN4       18B3
NC_RP1399        32A6
NC_RP2848        30A8
NC_RP3319        30D2
NC_RP3324_2      30C1
NC_RPT48P1       30D2
NC_RPT77P6       30B8
NC_SDOUT2        41C2
NC_SODIMM71      16C6
NC_SODIMM72      16C5
NC_SODIMM73      16C6
NC_SODIMM74      16C5
NC_SODIMM77      16C6
NC_SODIMM78      16C5
NC_SODIMM79      16C6
NC_SODIMM80      16C5
NC_SODIMM83      16C6
NC_SODIMM84      16C5
NC_SODIMM85      16C6
NC_SODIMM86      16C5
NC_SODIMM89      16C6
NC_SODIMM91      16C6
NC_SODIMM97      16B6
NC_SODIMM98      16B5
NC_SODIMM123     16B6
NC_SODIMM124     16B5
NC_SODIMM199     16A6
NC_SODIMM200     16A5
NC_SODIMM201     16D5
NC_SODIMM202     16A6
NC_SW3V5V_33OUT 52C6
NC_SYSCLK_DDRCLK_A2 14B4
NC_TAS_SDOUT1    41C2
NC_TESTMODE      9A3
NC_TMDS_TXD3M    25C2
NC_TMDS_TXD3P    25C2
NC_TMDS_TXD7M    25C2
NC_TMDS_TXD7P    25C2
NC_TX1_1         37C3
NC_TX1_2         37C3
```


NOTICE OF PROPRIETARY PROPERTY

THE INFORMATION CONTAINED HEREIN IS THE PROPRIETARY PROPERTY OF APPLE COMPUTER, INC. THE POSSESSOR AGREES TO THE FOLLOWING

I TO MAINTAIN THE DOCUMENT IN CONFIDENCE

II NOT TO REPRODUCE OR COPY IT

III NOT TO REVEAL OR PUBLISH IN WHOLE OR PART

APPLE COMPUTER INC.

SIZE	DRAWING NUMBER	REV.
D	051-6490	A
SCALE: NONE	SHT 64 OF 74	

```
NC_TX1_3        37C2
NC_TX1_4        37C2
NC_UB3P4        37D5
NC_USB2_AMC     34A4
NC_USB2_NANDTEST 34A4
NC_USB2_NTEST1  34A4
NC_USB2_PPON1   34B4
NC_USB2_PPON2   34B4
NC_USB2_PPON3   34B4
NC_USB2_PPON4   34B4
NC_USB2_PPON5   34B4
NC_USB2_RSDEM   34C4
NC_USB2_RSDEP   34C4
NC_USB2_RSDFM   34C4
NC_USB2_RSDFP   34B4
NC_USB2_SMC     34A4
NC_USB2_SMI_L   34A6
NC_USB2_SRCLK   34A4
NC_USB2_SRDTA   34A4
NC_USB2_SRMOD   34A4
NC_USB2_TEB     34A4
NC_USB2_TEST    34A4
NC_USB_M        33B2
NC_USB_P        33B2
NC_UT6P6        30D8
NC_UT6P7        30D8
NC_UT164        46D7
NC_UT165        46D7
NC_VCORE10      47D6
NC_VIPHCLK      24D5
NC_VTT<11..0>   20F7 20G7
NC_WL<23..1>    33B2 33B3
NC_XTALSOUT     24B4
NC_XTLINO       41B4
NEC_AVDD        34D5 54A3
NEC_XT2_B       34D3
NET16           48A5
NET18           46D6
NET19           46D6
NET22           46D8
NET24           46D8
NET32           44B1
NET32_B         44B1
NET40           46B4
NMI_BUTTON*     31B2 46C4 61D4
NV11_HSYNC      24C4 28D3
NV11_VSYNC      24C4 28D3
NV11_XTALIN     24B4 59D3
NV11_XTALOUT    24B4 59D3
NVAGP_TCLK      19A5
NVAGP_TRST_L    19A5
NVPLLVDD        24D5 54A6
NV_BLUE2        24C1
NV_GPIOD0       25D4
NV_GPIOD2       25D4
NV_GPIOD4       25D4
NV_GPIOD5       25D4
NV_GPIOD6       25C4
NV_GPIOD7       25C4
NV_GPIOD8       25C4
NV_GPIOD9       25C4
NV_GREEN2       24C1
NV_RED2         24C1
OGAL            43D7
OGAR            43C7
OGND3_JTAG_EN   37A5
OPA_STAR_GND    41A7 41D6 42C2 45B3
OPA_VREF        42B3 45B4
OUTM1           44B6
OUTM1FILT       44B4
OUTM2           44B6
OUTM2FILT       44A4
OUTP1           44B6
OUTP1FILT       44B4
OUTP2           44B6
OUTP2FILT       44B4
OUT_R           61B4
OVDD_ADJ        61C7
P1RC            44B4
P2RC            44B4
PAT_M           44B8
```

```
PB_AUD          43B4
PB_GAL          43B4
PCIT_AD<31..0>  33B2 33B3 33B6 33B7 33C2 33C3 33C6
                     33C7 56C7 61B2 61C2
PCIT_CBE<31..0> 33B2 33B6 33C3 56C7 61A4
PCIT_DEVSEL_L   33B6 33C2 56C7
PCIT_FRAME_L    33B6 33C2 56C7
PCIT_IRDY_L     33B6 33C3 56C7 61B4
PCIT_PAR        33B6 33C2 56C7
PCIT_STOP_L     33B6 33C2 56C7
PCIT_TRDY_L     33B6 33C2 56C7
PCI_AD<31..0>   32B1 32B2 32C4 32D4 33B6 33B7 33C6
                     33C7 34B6 34B7 34C6 55A6 61B2 61C2
PCI_CBE<3..0>   32C5 33B7 34B6 55A6 61A4
PCI_DEVSEL_L    32A8 32C5 33B7 34B6 56D7 61A4
PCI_FBI_EQUAL   32C7 56C7
PCI_FBI_PLUS2   32C7 56C7
PCI_FBQ_PLUS2   32C7 56D7
PCI_FB_PLUS4    32C8 56C7
PCI_FB_PLUS6    32C7 56C7
PCI_FRAME_L     32B8 32C5 33B7 34B6 55A6 61A4
PCI_IRDY_L      32B8 32C5 33B7 34B6 56D7
PCI_PAR         32C5 33B7 34B6 56D7 61A4
PCI_SLOTB_GNT_L 32A6 32D5 33C2 61A4
PCI_SLOTB_REQ_L 32A8 32D5 33C3 61A4
PCI_SLOTC_GNT_L 32A6 32D5
PCI_SLOTC_REQ_L 32A8 32D5
PCI_SLOTD_GNT_L 32A6 32C5 34B6
PCI_SLOTD_PERR_L 34B6
PCI_SLOTD_REQ_L 32A8 32D5 34B6
PCI_STOP_L      32A8 32C5 33B7 34B6 56D7 61A4
PCI_TRDY_L      32B8 32C5 33B7 34B6 56D7 61A4
PCK2059_VDDI2C  10D4 54D6
PGOOD           51B7 52A6
PG_E            47B6
PMURESETBUTTON* 46A4 61D4
PMU_5V_SCL      46C2 46C4
PMU_5V_SDA      46C2 46C4
PMU_ACK_L       30C3 46C4
PMU_AGP_RESET   46C4
PMU_AP          31B3 46D4
PMU_AVCC        46B5 46D4 54B3 61C4
PMU_BYTE        46B5
PMU_CLK         30C3 46C4
PMU_CLKIN       46B4 60A5
PMU_CLKOUT      46B4 60A5
PMU_CLKT        46B2 60A5
PMU_CNVSS       31B3 46B5
PMU_EPM*        31B3 46C4
PMU_FROM_INT    30C3 46C4
PMU_IIC_CLK     46A8 46B4
PMU_IIC_DAT     46A8 46B4
PMU_INT_L       30B5 30B8 46B5
PMU_INT_NMI     30A8 30B5 46C4
PMU_LOW_DSKTP   46B5
PMU_NMI         46B4
PMU_P64         31B2 46C2
PMU_PME_L       30B5 33C2 34A7 46B2 61A4
PMU_PME_LL      33C2
PMU_POWER       31C3 46A5 46B1 46C2 46D5 54B3
PMU_PRE_PLLSTOP 46B5
PMU_PWR_LED*    46C5
PMU_REQ_L       30A8 30C3 46C2
PMU_RST*        9A8 31B3 46A5 46B5 61D4
PMU_SMB_SCK     46A3
PMU_SMB_SDA     46A3
PMU_STRAP1      46C5
PMU_TO_INT      30C3 46C4
PMU_XI          46B5 60A5
PMU_XO          46B5 60A5
PMU_XT          46A6 60A5
POWERUP_OK      46B4
POWER_UP*       46C7 53A8 61D4
PRE_HRESET_L    8B4 8D5
PROBE_DIV       43B4 43D7
PSEUDO_STAR_GND 41B7 42B4
PWR_FAIL*       46B1 52D6
PWR_FAILPMU*    46B4
PWR_FAIL_T      52D7
PWR_LED         53A4
PWR_SWITCH*     9A8 46B1 46C5 61D4
```

```
PWR_UP          41C8 52C4 52C8 53B7 53C1 53C7 61D4
PWR_UP*         52C8
Q1P1            53C3
Q1P3            53C2
Q25_1           43A5
Q42P4           53D2
QT1P1           50B4
QT2P1           50B4
QT2P3           50B4
R264P2          41B4
RAM_ADDR<12..0> 14A3 14B3 14C1 14C3 14D1 14D3 16B4
                     16B6 17B4 17B6 17C4 17C6 55D6
RAM_BA<1..0>    14B3 16B4 16B6 17B6 55D6
RAM_CAS_L       14A3 16B4 17B6 55C6
RAM_CKE<3..0>   14A1 14B1 14C1 16B4 16B6 17C4 17C6
                     55C6
RAM_CS_L<3..0>  14A1 14B1 14C1 16B4 16B6 17B4 55C6
RAM_DATA_A<63..0> 15B2 15B6 15C2 15C4 15C7 15D4
                     15D7 16A4 16A6 16B4 16B6 16C4 16C6
                     16D4 16D6 55D6
RAM_DATA_B<63..0> 15A2 15A6 15B2 15B4 15B7 15C4
                     15C7 17A4 17A6 17B4 17B6 17C4 17C6
                     17D4 17D6 55D6
RAM_DQM_A<7..0> 15A6 15B2 15B6 15C4 15C7 15D4 15D7
                     16A4 16B4 16C4 16D4 55D6
RAM_DQM_B<7..0> 15A2 15A6 15B2 15B4 15B7 15C4 15C7
                     17A4 17B4 17C4 17D4 55D6
RAM_DQS_A<7..0> 15B2 15B6 15C4 15C7 15D4 15D7 16A6
                     16B6 16C6 16D6 55D6
RAM_DQS_B<7..0> 15A2 15A6 15B2 15B4 15B7 15C4 15C7
                     17A6 17B6 17C6 17D6 55D6
RAM_RAS_L       14A3 16B4 17B4 55C6
RAM_SA0         17A4
RAM_WE_L        14A3 16B6 17B6 55C6
RB22P2          50B2
RB27-1          50B6
RB37P1          50C6
RB160P1         52A5
RB213P2         51C3
RB227P1         51C5
REF_STAR_GND    41A5 41A7
RESET_BUTTON*   31B2 46C4 61D4
RFBA<11..0>     20E2 20F2 22C2 22C6 22D2 22D6 57D3
RFBABA<1..0>    20E2 22C2 22C6 57D3
RFBACAS_L       20G2 22B2 22B6 57D3
RFBACKE         20D2 22C2 22C6 57C3
RFBACLK0        21C1 22C6 57C3
RFBACLK0_L      21C1 22C6 57C3
RFBACLK1        21D1 22C2 57C3
RFBACLK1_L      21D1 22C2 57C3
RFBACS0_L       20F2 22B2 22B6 57C3
RFBARAS_L       20G2 22B2 22B6 57D3
RFBAWE_L        20F2 22B2 22B6 57D3
RFBBA<11..0>    20B2 20C2 23C2 23C6 23D2 23D6 57C3
RFBBBA<1..0>    20A2 23C2 23C6 57C3
RFBBCAS_L       20C2 23B2 23B6 57B3
RFBBCKE         20A2 23C2 23C6 57B3
RFBBCLK0        21B1 23C6 57B3
RFBBCLK0_L      21B1 23C6 57B3
RFBBCLK1        21C1 23C2 57B3
RFBBCLK1_L      21B1 23C2 57B3
RFBBCS0_L       20C2 23B2 23B6 57B3
RFBBRAS_L       20C2 23B2 23B6 57B3
RFBBWE_L        20C2 23B2 23B6 57B3
RFBD<127..0>    21B4 21B7 21C4 21C7 21D4 21D7 22B1
                     22B5 22C1 22C5 23B1 23B5 23C1 23C5
                     57C3 57D3
RFBDQM<15..0>   20C2 20D2 20G2 22C2 22C6 23C2 23C6
                     57C3 57D3
RFBDQS<15..0>   21A3 21A6 22C2 22C6 23C2 23C6 57B3
                     57C3
RF_CLKRUN_L     33C3 61B4
RF_DISABLE_L    33C3
RINA            41C4 42B2
RINT_PU_RESET_L 36C5
RINT_RESET_L    36C5
RJ45_4_5        37C1 59B3
RJ45_7_8        37C1 59B3
RJ45_F_TREF     37B2 59B3
RJ45_RREF       37C2 59B3
RJ45_RXN        37C1 37C2 59B3
```

```
RJ45_RXP        37C1 37C2 59B3
RJ45_TREF       37C2 59B3
RJ45_TXN        37C1 37C2 59B3
RJ45_TXP        37C1 37C2 59B3
ROMA14          20C8 28D8
ROMA15          20C8 28D8
ROM_CS_L        32B4 32B6 33B4 61C7
ROM_OE_L        32B2 32B6 33B2 61C7
ROM_ONBOARD_CS_L 32B2 33B4 61D4
ROM_RW_L        32B2 32B6 33B4 61B7
ROM_WP_L        32A2 61A7
RSPKRCAP        44C8
RSPKRIN1        44B6
RSPKRVP1        44B6
RT78P2          37C4
RT373P1         53A5
RT401P1         49C5
RT406P2         49B3
RT418P2         52C7
RUNLED1         53A5
RUNSS           52D4
S3700P1         46A1
S3700P2         46A1
SB1P1           46A3
SENSE+          47C6
SENSE+_1        47B5 47C7
SENSE-          47C6 47C8
SENSE-_1        47B5 47C7
SGRAVREF        22A3 22C4 22C8 54A6
SGRBVREF        23A3 23C4 23C8 54A6
SHS             52C8
SLEEP           46B5 52C4 61C4
SLEEP1          53A8
SLEEP2          53A7
SLEEPA_OFF_L    53C5
SLEEPLED_TERM   53A6
SLEEP_LED_BD    53A6
SLEEP_OFF_L     53B6 53C7
SLEEP_OFF_L2    41C7
SND_AMP_MUTE_L  30C5 44A8
SND_AMP_M_L     44A7 44B8
SND_CLKOUT      30A2 41B4
SND_HP_MUTE_L   30C5 43A7
SND_HP_M_L      43A7
SND_HP_SENSE    30B5 43A5 61B7
SND_HP_SENSE_CONN 43A3 43B2
SND_HW_RESET_L  30A8 30B5 41B4
SND_LIN_SENSE   30B5 42D4 61B4
SND_SCLK        30A2 41B1
SND_SPKR_ID     30B5 44C5
SND_SYNC        30B2 41C1
SND_TO_AUDIO    30B2 41C4
SNF_FSEL        10A7 30C5
SPDA            44C3
SPKR_JACK_DALLAS 44B1
SPKR_L+         44B1
SPKR_L-         44B1
SPKR_MUTE_T     44B6 44B7
SPKR_R+         44B1
SPKR_R-         44B1
SSCG_LOCK       10A7
STBYMD          52B7
STOP_AGP_L      18C6 18D3 19A8 56B7
SUPER_FLO       47C7
SW3V5V_12VIN    52C7
SW3V5V_INTVCC   52B5 52C6
SW3V5V_SGND     52A7 52A8 52B7 52B8 52C7
SW3V5V_VIN      52C6
SW3VITH2R       52A8
SW3V_3VSENSE    52B4
SW3V_BG2        52B6
SW3V_BG2R       52B5
SW3V_BOOST2     52B6
SW3V_BOOST2R    52C5
SW3V_ITH2       52A7 52B6
SW3V_RUNSS      52B6 52C3
SW3V_RUNSSR     52C3
SW3V_SNSM       52B6
SW3V_SNSP       52B6
SW3V_SW2        52B6 52C4
SW3V_SW2A       52C3
```


NOTICE OF PROPRIETARY PROPERTY

THE INFORMATION CONTAINED HEREIN IS THE PROPRIETARY PROPERTY OF APPLE COMPUTER, INC. THE POSSESSOR AGREES TO THE FOLLOWING

I TO MAINTAIN THE DOCUMENT IN CONFIDENCE

II NOT TO REPRODUCE OR COPY IT

III NOT TO REVEAL OR PUBLISH IN WHOLE OR PART

APPLE COMPUTER INC.

SIZE	DRAWING NUMBER	REV.
D	051-6490	A

SCALE	SHT	OF
NONE	65	74

8	7	6	5	4	3	2	1

SW3V_TG2 52B6
SW3V_TG2R 52C5
SW3V_VOSNS 52B6
SW5VITH1R 52B8
SW5V_5VSENSE 52A4
SW5V_BG1 52A5 52B7
SW5V_BG1R 52A5
SW5V_BOOST1 52A5 52B7
SW5V_ITH1 52B7
SW5V_RUNSS 52B8 52D3
SW5V_SNSM 52A5 52B7
SW5V_SNSMA 52A4
SW5V_SNSP 52A5 52B7
SW5V_SW1 52A4 52A5 52B7
SW5V_SW1A 52A3
SW5V_TG1 52B5 52B7
SW5V_TG1R 52B4
SW5V_VOSNS 52B7
SW12V_SL 53C7
SW12V_SLEEP 53D7
SWITCH5V_3 53B6
SWITCH5V_4 53B6
SWITCH5V_5 53B1 53B3
SWITCH5V_6 53B2
SYSCLK_CPU 4D2 11A4 58C3
SYSCLK_CPU_UF 11A3 58C3
SYSCLK_DDRCLK_A0 10C2 14C4 16D6 55C6
SYSCLK_DDRCLK_A0_L 10C2 14C4 16D6 55C6
SYSCLK_DDRCLK_A0_L_UF 14B6 14C5 55C6
SYSCLK_DDRCLK_A0_UF 14B6 14C5 55C6
SYSCLK_DDRCLK_A1 10C2 14C4 16A4 55C6
SYSCLK_DDRCLK_A1_L 10C2 14B4 16A4 55C6
SYSCLK_DDRCLK_A1_L_UF 14B5 14B6 55C6
SYSCLK_DDRCLK_A1_UF 14B6 14C5 55C6
SYSCLK_DDRCLK_A2_L 10C5 14B4 55B6
SYSCLK_DDRCLK_A2_L_UF 14B5 14B6 55C6
SYSCLK_DDRCLK_A2_UF 14B5 14B6 55C6
SYSCLK_DDRCLK_B0 10C2 14B4 17B4 55B6
SYSCLK_DDRCLK_B0_L 10C2 14B4 17B4 55B6
SYSCLK_DDRCLK_B0_L_UF 14B5 14B6 55B6
SYSCLK_DDRCLK_B0_UF 14B5 14B6 55B6
SYSCLK_DDRCLK_B1 10C2 14A4 17D6 55B6
SYSCLK_DDRCLK_B1_L 10C2 14A4 17D6 55B6
SYSCLK_DDRCLK_B1_L_UF 14A5 14B6 55B6
SYSCLK_DDRCLK_B1_UF 14A5 14B6 55B6
SYSCLK_DDRCLK_B2 10B2 14A4 17A6 55B6
SYSCLK_DDRCLK_B2_L 10B2 14A4 17A6 55B6
SYSCLK_DDRCLK_B2_L_UF 14A5 14B6 55B6
SYSCLK_DDRCLK_B2_UF 14A5 14B6 55B6
SYSCLK_LA 9B3 9D8 58B3
SYSTEM_CLK_EN 10A7 30A5 46C4
TAS_DVDD 41D3
TAS_PWR_DOWN 41B4 41D7
TAS_STAR_GND 41A7 41D2
TAS_VCOM 41B1 41B3 44B8
TCKM 26A5 26C3 59C3
TCKP 26B5 26C4 59C3
TD0M 26B5 26C4 59C3
TD0P 26B5 26C3 59C3
TD1M 26C3 26C5 59C3
TD1P 26C4 26C5 59C3
TD2M 26C4 26D5 59C3
TD2P 26C3 26D5 59C3
TESTEN 37A5 37C4
TMDS_DDC_CLK 26A5 26B3 61C4
TMDS_DDC_DAT 26A5 26B4 61C4
TMDS_EN 25C6 53B1
TPA_PGND 44B6 44C8 53C5
TPA_SLP_H 44A7 53D4
TPA_STAR_GND 41B7 44A7
TPA_VA 44C8 44D7 53D5
TPA_VL 44C8 44D6
TPA_VR 44C8 44D6
TP_BUF_RST 24B5
TP_DVOCLKOUT 24C5
TP_DVOCLKOUT* 24C5
TP_DVOVSYNC 24B5
TRANS_ADJ 47B3
TRST_IN 8B3
T_UD_IDEDD_0 39C1 40C3 60C2
T_UD_IDEDD_1 39C1 40C3 60C2

T_UD_IDEDD_2 39C1 40C3 60C2
T_UD_IDEDD_3 39C1 40C3 60C2
T_UD_IDEDD_4 39B1 40C3 60C2
T_UD_IDEDD_5 39B1 40C3 60C2
T_UD_IDEDD_6 39B1 40C3 60B2
T_UD_IDEDD_7 39B1 40C3 60B2
T_UD_IDEDD_8 39B1 40C2 60B2
T_UD_IDEDD_9 39B1 40C2 60B2
T_UD_IDEDD_10 39B1 40C2 60B2
T_UD_IDEDD_11 39B1 40C2 60B2
T_UD_IDEDD_12 39B1 40C2 60B2
T_UD_IDEDD_13 39A1 40C2 60B2
T_UD_IDEDD_14 39A1 40C2 60B2
T_UD_IDEDD_15 39A1 40C2 60B2
US_SDOUT 41C3
U22_8 38D8
U4202P2 42C3
U4202P3 42C3
U4202P5 42B3
U4202P6 42B3
U4202P7 42B3
UATA0IRQ 40C6 60D5
UATAD<15..0> 39A4 39B4 39C4 40C6 60D5
UB5PAE8 24B5
UIDE_ADDR<2..0> 39C7 40A4 40B4 60B5
UIDE_CS1FX_L 39C7 40B4 60B5
UIDE_CS3FX_L 39C7 40B4 60B5
UIDE_CSELP_L 40C2 54A6
UIDE_DATA<15..0> 39A3 39B3 39C3 39C7 39D7 60C5
UIDE_DIOR_L 39C7 39D3 60C5
UIDE_DIOW_L 39C3 39C7 60C5
UIDE_DMACK_L 39C7 39D3 60C5
UIDE_DMARQ 39C7 40C4 60C5
UIDE_INTRQ 39C7 40C4 60C5
UIDE_IOCHRDY 39C3 39C7 60C5
UIDE_PDIAG 40C2
UIDE_REF 39C7
UIDE_RST_L 39C7 39D3 60C5
UNUSED_ATAIOCS16_L 40C2 54A6
UNUSED_EXTINT7 30B5 30B8
UNUSED_EXTINT8 30B5 30B8
UNUSED_GPIO15 30B5 30C1 61A4
USB2_CRUN_L 30B5 34A7
USB2_DAN_F 34C1 34C4 35B7 58B3
USB2_DAP_F 34C1 35B7 58B3
USB2_DBN_F 34C1 35C7 58B3
USB2_DBP_F 34C1 34C4 35C7 58B3
USB2_DCN_F 34C1 35D7 58B3
USB2_DCP_F 34C1 35D7 58B3
USB2_IDSEL 34B6
USB2_NC1 34B4
USB2_NC2 34B4
USB2_PME_L 34A6
USB2_RREF 34B4 58B3
USB2_RSDAM 34C4 58B3
USB2_RSDAP 34C4 58B3
USB2_RSDBM 34C4 58B3
USB2_RSDBP 34C4 58B3
USB2_RSDCM 34C4 58B3
USB2_RSDCP 34C4 58B3
USB2_XT1 34C4 58B3
USB2_XT2 34C4 58B3
USB2_XT2_B 58B3
USBT_DAN_F 35B6 58B3
USBT_DAP_F 35B6 58B3
USBT_DBN_F 35C6 58A3
USBT_DBP_F 35C6 58A3
USBT_DCN_F 35D6 58A3
USBT_DCP_F 35D6 58A3
USB_DAN 30B3 60B5
USB_DAN_CON 35C3 58A3 61C4
USB_DAN_F 30B2 35B7 60B5
USB_DAP 30B3 60B5
USB_DAP_CON 35C3 58A3 61C4
USB_DAP_F 30B2 35B7 60B5
USB_DBN 30B3 60B5
USB_DBN_CON 35B3 58A3 61C4
USB_DBN_F 30B2 35C7 60B5
USB_DBP 30B3 60B5
USB_DBP_CON 35B3 58A3 61C4
USB_DBP_F 30B2 35C7 60B5

USB_DCN 30B3 60B5
USB_DCN_CON 35D3 58A3 61C4
USB_DCN_F 30B2 35D7 60B5
USB_DCP 30B3 60B5
USB_DCP_CON 35D3 58A3 61C4
USB_DCP_F 30B2 35D7 60B5
USB_DDN 30B3
USB_DDN_F_TERM 30B2
USB_DDP 30B3
USB_DDP_F_TERM 30B2
USB_DEN 30B3 60B5
USB_DEP 30B3 60B5
USB_DFN 30B3 60A5
USB_DFP 30B3 60A5
USB_GND 35A4 35B3 35C3 35D3 54A3
USB_OC_EF_L 30B3 30C2
USB_PORT_PWR 35A4 35B3 35C3 35D3 54A3 61B4
USB_PWR 27B5 27C2 27D3 35A6 54A3
USB_PWREN_AB_L 30B3 30C2
USB_PWREN_CD_L 30B3 30C2
USB_PWREN_EF_L 30B3 30C2
USB_PWR_EN 35A7 54A3
USB_PWR_FLT* 30B3 34B1 35A6
UX6P23 41C4
UX6_LINB 41C4
U_USB_PWR_FLT* 34B4
VCOREIN 47D6
VCORE_BG 47C6
VCORE_BG_1 47B5 47C7
VCORE_BOOST 47C5
VCORE_BOOST2 47C6
VCORE_BOOST2_1 47B5 47C7
VCORE_BOOST_1 47B5
VCORE_EXTVCC 47D7
VCORE_FREQSET 47C7
VCORE_INTVCC 47B5 47D5 47D7
VCORE_SEN+ 47C3
VCORE_SEN+_1 47A3
VCORE_SENA+ 47C3
VCORE_SF 47C8
VCORE_SGND 47B7 47C7 47C8
VCORE_STBY 47C7
VCORE_TG 47C6
VCORE_TG_1 47B5 47C7
VCORE_VGATE 10A8 30B5
VCORE_VIN 47D7
VC_CNTL1 46C7 47D8
VC_SENA 47B3
VGA_IIC_CLK 27C4 61B4
VGA_IIC_DAT 27C4 61B4
VGER_INV_HRESET 7A3 7B3 7C3 46D1
VIPCLK 24D4 54A6
VIPD0 24D4 28B7
VIPD1 24D4 28B7
VIPD2 24D4 28B8
VIPD3 24D4 28D7
VIPD4 24D4 28D7
VIPD5 24D4 28D7
VIPD6 24D4 28B8
VIPD7 24D4 28C5
VIPHAD0 24D5 28B7
VIPHAD1 24D5 28B7
VIPHCTL 24D5 28D5
VIP_PD 24C4
VIP_PU 24C4
VOSNS1 52B8
VOSNS2 52B5
VR43P2 48C5
VR4210P1 41B7
VREFM 41B4
VREFP 41B4 45B2
VRFILT 41B3
VSYNC* 24C5 59D3
WL_PCI_IDSEL 33C2 61A4
XMIT_LED 37A2 37B4
XW4000P2 44B7
XW4001P2 44A7
XW4002P2 44A7 44D7
ZT8P1 4A1
ZT9P1 4B2
ZT10P1 4A2

ZT11P1 4B1

NOTICE OF PROPRIETARY PROPERTY

THE INFORMATION CONTAINED HEREIN IS THE PROPRIETARY PROPERTY OF APPLE COMPUTER, INC. THE POSSESSOR AGREES TO THE FOLLOWING

I TO MAINTAIN THE DOCUMENT IN CONFIDENCE

II NOT TO REPRODUCE OR COPY IT

III NOT TO REVEAL OR PUBLISH IN WHOLE OR PART

APPLE COMPUTER INC.

SIZE	DRAWING NUMBER	REV.
D	051-6490	A

SCALE	SHT	OF
NONE	66	74

8	7	6	5	4	3	2	1

*** Unit Cross-Reference ***
--- for the entire design --

BS1	PCB_STANDOFF	31B5
BS2	PCB_STANDOFF	31B6
BS3	PCB_STANDOFF	31D1
BS4	PCB_STANDOFF	31D1
BT1	BATTERY	46D6
C1	CAP	35C3
C2	CAP	35D3
C3	CAP	37B1
C4	CAP	38B6
C5	CAP_P	35A5
C6	CAP	35B3
C7	CAP_P	35A5
C8	CAP	23A4
C9	CAP	23A4
C10	CAP_P	38D7
C11	CAP	23A5
C12	CAP_P	38D7
C13	CAP_P	43C4
C14	CAP_P	44C7
C15	CAP	23D2
C16	CAP	23B4
C17	CAP	23D5
C18	CAP	53D2
C19	CAP_P	53D3
C20	CAP	23B2
C21	CAP	23D5
C22	CAP	23B4
C23	CAP	23B4
C24	CAP_P	42B4
C25	CAP_P	42C4
C26	CAP_P	43D4
C27	CAP	38D8
C28	CAP	23B1
C29	CAP	23B3
C30	CAP	44B4
C31	CAP	23B2
C32	CAP	23D4
C33	CAP	23B2
C34	CAP	23B3
C35	CAP	45C4
C36	CAP	37D2
C37	CAP	37D7
C38	CAP	23D2
C39	CAP	23D5
C40	CAP	23B3
C41	CAP	37D7
C42	CAP	38B8
C43	CAP	43D6
C44	CAP	37D3
C45	CAP	37D2
C46	CAP	37D4
C47	CAP_P	44D7
C48	CAP	44D7
C49	CAP	44C7
C50	CAP_P	44D7
C51	CAP	37B3
C52	CAP	37D2
C53	CAP	37D4
C54	CAP	20B8
C55	CAP	37D3
C56	CAP	37D3
C57	CAP	37D5
C58	CAP	37D5
C59	CAP_P	50B2
C60	CAP	43C6
C61	CAP	20B6
C62	CAP	20D6
C63	CAP	42B2
C64	CAP	42C2
C65	CAP	37D6
C66	CAP	37D7
C67	CAP	37D4
C68	CAP	37D6
C69	CAP	20B5
C70	CAP	20B6
C71	CAP_P	50B1
C72	CAP	20H7
C73	CAP	20H7
C74	CAP	37B7
C75	CAP	20H5
C76	CAP	37B7
C77	CAP	34D3
C78	CAP	20H6
C79	CAP	20H4
C80	CAP	20H2
C81	CAP	20H7
C82	CAP	20H4
C83	CAP	20H3
C84	CAP	20H8
C85	CAP_P	41C6
C86	CAP	20H8
C87	CAP	19B3
C88	CAP_P	50B1
C89	CAP	20H2
C90	CAP	20H7
C91	CAP	19B4
C92	CAP	36B6
C93	CAP	19C4
C94	CAP	19C3
C95	CAP	20H5
C96	CAP	20H2
C97	CAP	19B3
C98	CAP	20H6
C99	CAP	19D2
C100	CAP	19D3
C101	CAP	19D3
C102	CAP	19C3
C103	CAP	19D3
C104	CAP	19D4
C105	CAP	19B3
C106	CAP_P	50B2
C107	CAP	44B8
C108	CAP	44B8
C109	CAP	19D3
C110	CAP	19D2
C111	CAP	19B4
C112	CAP	19B2
C113	CAP_P	48A4
C114	CAP	34D3
C115	CAP	20H3
C116	CAP	19B3
C117	CAP	19D4
C118	CAP	19C3
C119	CAP	25B4
C120	CAP	19C3
C121	CAP	41C4
C122	CAP	44C8
C123	CAP	32C2
C124	CAP	20H1
C125	CAP	25B5
C126	CAP_P	41C7
C127	CAP_P	41B2
C128	CAP	24D3
C129	CAP	19B3
C130	CAP	25B5
C131	CAP	25B4
C132	CAP_P	50B2
C133	CAP	20H6
C134	CAP	19D4
C135	CAP	19C3
C136	CAP	19B3
C137	CAP	19B4
C138	CAP_P	48A5
C139	CAP	19D2
C140	CAP	19C2
C141	CAP	22B3
C142	CAP	22D5
C143	CAP	22D4
C144	CAP	22D5
C145	CAP	20H2
C146	CAP	19D1
C147	CAP	19C3
C148	CAP	19C4
C149	CAP	19C4
C150	CAP	19C4
C151	CAP	19C3
C152	CAP	25B5
C153	CAP	24C7
C154	CAP	10B6
C155	CAP_P	44D7
C156	CAP_P	44C7
C157	CAP	22A4
C158	CAP	22D5
C159	CAP	20H5
C160	CAP	25C6
C161	CAP	19C4
C162	CAP	24C6
C163	CAP	24C6
C164	CAP	24C7
C165	CAP	22B3
C166	CAP	22B3
C167	CAP	20H5
C168	CAP	19C4
C169	CAP	19C3
C170	CAP	24C7
C171	CAP_P	48A6
C172	CAP	22A4
C173	CAP	22B2
C174	CAP	22B4
C175	CAP	20H3
C176	CAP	19D2
C177	CAP	19B4
C178	CAP	19D4
C179	CAP	19B3
C180	CAP	19D3
C181	CAP	19B2
C182	CAP	19B2
C183	CAP	19D2
C184	CAP	19B2
C185	CAP	19D3
C186	CAP	19B4
C187	CAP	19B3
C188	CAP	19B1
C189	CAP	25C5
C190	CAP	24C7
C191	CAP	22A5
C192	CAP	19D5
C193	CAP	19B5
C194	CAP	22B4
C195	CAP	22B1
C196	CAP	22B2
C197	CAP	22B2
C198	CAP	22B4
C199	CAP	20H3
C200	CAP	19D4
C201	CAP	19D4
C202	CAP	19D3
C203	CAP	19D3
C204	CAP	42C5
C205	CAP	22D2
C206	CAP	24C2
C207	CAP	24C7
C208	CAP	43A5
C209	CAP	24B6
C210	CAP	16A3
C211	CAP	16A2
C212	CAP	24D6
C213	CAP	24D6
C214	CAP	19A3
C215	CAP	19A3
C216	CAP	22D2
C217	CAP	19C1
C218	CAP_P	51B3
C219	CAP	19C2
C220	CAP_P	50C8
C221	CAP	16B3
C222	CAP	18A8
C223	CAP	19C2
C224	CAP	24C2
C225	CAP	32C2
C226	CAP	24D6
C227	CAP	24C3
C228	CAP	24C3
C229	CAP	30C6
C230	CAP	15D7
C231	CAP	13C8
C232	CAP	13C8
C233	CAP	30D6
C234	CAP	30D7
C235	CAP_P	51B3
C236	CAP	53B3
C237	CAP_P	50C8
C238	CAP_P	53C5
C239	CAP	46A4
C240	CAP	13B8
C241	CAP	52C6
C242	CAP	16C3
C243	CAP	16C2
C244	CAP	16C3
C245	CAP_P	46D5
C246	CAP_P	53B3
C247	CAP	10D4
C248	CAP	41B4
C249	CAP	33D1
C250	CAP	33D2
C251	CAP	10D7
C252	CAP	53B2
C253	CAP	10D7
C254	CAP	53B1
C255	CAP	16C2
C256	CAP	16C1
C257	CAP	53B2
C258	CAP	53B2
C259	CAP	33D1
C260	CAP	33D2
C261	CAP	16C1
C262	CAP	49B4
C263	CAP	16C3
C264	CAP	13C4
C265	CAP	49B3
C266	CAP	49B8
C267	CAP	46D6
C268	CAP	10B8
C269	CAP_P	53D6
C270	CAP	49A5
C271	CAP	13B8
C272	CAP	49B4
C273	CAP	49C5
C274	CAP	10B8
C275	CAP	16C2
C276	CAP	16C2
C277	CAP	13B8
C278	CAP	13C6
C279	CAP	13C5
C280	CAP	13C6
C281	CAP	13C6
C282	CAP	49B6
C283	CAP	49C7
C284	CAP	49B4
C285	CAP	49B7
C286	CAP	49B7
C287	CAP	52A1
C288	CAP	13D8
C289	CAP	13D8
C290	CAP	13D8
C291	CAP	13D8
C292	CAP	13D4
C293	CAP	52A1
C294	CAP	52A1
C295	CAP_P	52C6
C296	CAP_P	49B3
C297	CAP	49C4
C298	CAP	49C5
C299	CAP	49C4
C300	CAP_P	49C3
C301	CAP_P	49C4
C302	CAP_P	52A2
C303	CAP	52C3
C304	CAP	16C2
C305	CAP	49C4
C306	CAP_P	52A2
C307	CAP_P	52A2
C308	CAP_P	52A3
C309	CAP_P	52A3
C310	CAP_P	52A2
C311	CAP	16C1
C312	CAP	31D3
C313	CAP	16C3
C314	CAP	31D3
C315	CAP	52A8
C316	CAP	52A8

NOTICE OF PROPRIETARY PROPERTY

THE INFORMATION CONTAINED HEREIN IS THE PROPRIETARY PROPERTY OF APPLE COMPUTER, INC. THE POSSESSOR AGREES TO THE FOLLOWING

I TO MAINTAIN THE DOCUMENT IN CONFIDENCE

II NOT TO REPRODUCE OR COPY IT

III NOT TO REVEAL OR PUBLISH IN WHOLE OR PART

APPLE COMPUTER INC.

SIZE	DRAWING NUMBER	REV.
D	051-6490	A

SCALE	SHT	OF
NONE	67	74

C317	CAP	52B8
C318	CAP	52B8
C319	CAP	16A8
C320	CAP	16C2
C321	CAP	52B7
C322	CAP	52A7
C323	CAP_P	51B3
C324	CAP_P	51B3
C325	CAP	49A4
C326	CAP_P	52B2
C327	CAP_P	52B2
C328	CAP_P	52B2
C329	CAP	51B3
C330	CAP_P	51B3
C331	CAP_P	51B2
C332	CAP_P	51B2
C333	CAP	52B6
C334	CAP_P	47C1
C335	CAP_P	47C2
C336	CAP_P	47C2
C337	CAP_P	47C2
C338	CAP_P	52D7
C339	CAP_P	52D7
C340	CAP_P	47C2
C341	CAP	52B7
C342	CAP_P	51C3
C343	CAP_P	47D3
C344	CAP	52B4
C345	CAP	4B1
C346	CAP_P	47B1
C347	CAP_P	47B2
C348	CAP_P	47B2
C349	CAP_P	52D7
C350	CAP	9D4
C351	CAP_P	51C3
C352	CAP	4B1
C353	CAP	9D4
C354	CAP_P	52D4
C355	CAP_P	52D4
C356	CAP_P	52D4
C357	CAP_P	47D3
C358	CAP	51C4
C359	CAP	51B7
C360	CAP_P	48C4
C361	CAP_P	47B2
C362	CAP_P	47B2
C363	CAP_P	48C5
C364	CAP	9C1
C365	CAP_P	48C6
C366	CAP	48C5
C367	CAP	47B6
C369	CAP	4A1
C370	CAP	4A1
C371	CAP	47C5
C372	CAP	47B7
C373	CAP	47C8
C374	CAP	47B5
C375	CAP	38C1
C376	CAP	38D3
C377	CAP	35A4
C378	CAP	38C2
C379	CAP	38C2
C380	CAP	35C3
C381	CAP	38D3
C382	CAP	35A4
C383	CAP	35C4
C384	CAP	38C2
C385	CAP	35B3
C386	CAP	35C3
C387	CAP	35C4
C388	CAP	44A1
C389	CAP	35B4
C390	CAP	38A6
C391	CAP	35B4
C392	CAP	38A6
C393	CAP	38A6
C394	CAP	38A6
C395	CAP	38A6
C396	CAP	35A4
C397	CAP	35D3
C398	CAP	35B3

C399	CAP	38A7
C400	CAP	37C1
C401	CAP	37D1
C402	CAP	44C3
C403	CAP	35D4
C404	CAP	35D4
C405	CAP	35D3
C406	CAP	38B6
C407	CAP	38A6
C408	CAP	43B3
C409	CAP	27B3
C410	CAP	38D4
C411	CAP	38A7
C412	CAP	43C3
C413	CAP	35D3
C414	CAP	27B4
C415	CAP	27A4
C416	CAP	27A4
C417	CAP	35B3
C418	CAP	38D4
C419	CAP	44B3
C420	CAP	43D3
C421	CAP	27D4
C422	CAP	27C4
C423	CAP	27C3
C424	CAP	38B6
C425	CAP	44B3
C426	CAP	44B2
C427	CAP	43B3
C428	CAP	38B7
C429	CAP	44B2
C430	CAP	44B2
C431	CAP	42B6
C432	CAP	27B3
C433	CAP	35C3
C434	CAP	37D1
C435	CAP	44B2
C436	CAP	43A4
C437	CAP	42C6
C438	CAP	37D2
C439	CAP	38B4
C440	CAP	38B4
C441	CAP	38C5
C442	CAP	38C5
C443	CAP	38B2
C444	CAP	38B2
C445	CAP	38C3
C446	CAP	38C3
C447	CAP	42B6
C448	CAP	44B4
C449	CAP	35A7
C450	CAP	38B3
C451	CAP	38B2
C452	CAP	38B4
C453	CAP	43B4
C454	CAP	42C6
C455	CAP	38B4
C456	CAP	38B3
C457	CAP	38B4
C458	CAP	38B3
C459	CAP	44B4
C460	CAP	23D2
C461	CAP	23B7
C462	CAP	23B8
C463	CAP	38B4
C464	CAP	38B4
C465	CAP	44B4
C466	CAP	23B7
C467	CAP	23D8
C468	CAP	38B1
C469	CAP	23B7
C470	CAP	23B8
C471	CAP	38B4
C472	CAP	38B1
C473	CAP	53D2
C474	CAP	44A4
C475	CAP	23B6
C476	CAP	23B6
C477	CAP	38C7
C478	CAP	45B5
C479	CAP_P	42C4

C480	CAP_P	42B4
C481	CAP	38B3
C482	CAP	38B3
C483	CAP	38B3
C484	CAP	38B5
C485	CAP	38B1
C486	CAP	23B6
C487	CAP	23D7
C488	CAP	23B7
C489	CAP	23B5
C490	CAP	38B6
C491	CAP	44B4
C492	CAP	23D2
C493	CAP	23D7
C494	CAP	23D7
C495	CAP	38B2
C496	CAP	38B2
C497	CAP	44B4
C498	CAP	44B4
C499	CAP	43D6
C500	CAP	38C7
C501	CAP	44C5
C502	CAP	44C5
C503	CAP	43C6
C504	CAP	43B7
C505	CAP	42D3
C506	CAP	42C3
C507	CAP	42B3
C508	CAP	43C6
C509	CAP	20B8
C510	CAP	20B8
C511	CAP	34D5
C512	CAP_P	43B7
C513	CAP	42B3
C514	CAP	42C3
C515	CAP	34C8
C516	CAP	34D8
C517	CAP	34C8
C518	CAP	43B7
C519	CAP	34D8
C520	CAP	22D2
C521	CAP	22D2
C522	CAP	34D8
C523	CAP	34D8
C524	CAP_P	43C7
C525	CAP_P	43D7
C526	CAP	34D5
C527	CAP	34D8
C528	CAP_P	50B3
C529	CAP	34D5
C530	CAP	34C7
C531	CAP	34C7
C532	CAP	22D7
C533	CAP	22D7
C534	CAP	22B6
C535	CAP	22B6
C536	CAP	34C8
C537	CAP	34D7
C538	CAP_P	41D6
C539	CAP_P	41B7
C540	CAP	22D8
C541	CAP	34D8
C542	CAP	45C3
C543	CAP	50B3
C544	CAP	22D7
C545	CAP	22B7
C546	CAP	34D8
C547	CAP	34D7
C548	CAP	34D8
C549	CAP	41D7
C550	CAP	45B2
C551	CAP	45B3
C552	CAP	50B6
C553	CAP	22B6
C554	CAP	22B7
C555	CAP	34D7
C556	CAP	45C2
C557	CAP	50C3
C558	CAP_P	50B2
C559	CAP	34D8
C560	CAP	44B5

C561	CAP	44B6
C562	CAP	17C2
C563	CAP	50B6
C564	CAP	50C2
C565	CAP	22B5
C566	CAP	22B7
C567	CAP	22B7
C568	CAP	22B8
C569	CAP	22B8
C570	CAP	34C8
C571	CAP	44B5
C572	CAP	50B7
C573	CAP	34C8
C574	CAP	34C8
C575	CAP	44B7
C576	CAP	50C3
C577	CAP	44B5
C578	CAP	41C5
C579	CAP	41C5
C580	CAP_P	41B2
C581	CAP	41B2
C582	CAP	44C3
C583	CAP	48A5
C584	CAP	41D3
C585	CAP	50B5
C586	CAP	50A4
C587	CAP	41B2
C588	CAP	41B5
C589	CAP	50C5
C590	CAP	53C4
C591	CAP_P	41D2
C592	CAP	41B5
C593	CAP	17C1
C594	CAP	41B5
C595	CAP	41B5
C596	CAP	50C6
C597	CAP	41C4
C598	CAP	9B2
C599	CAP	41D4
C600	CAP_P	41D4
C601	CAP	31A5
C602	CAP	17C1
C603	CAP	18A8
C604	CAP_P	31A7
C605	CAP	24C2
C606	CAP	24C2
C607	CAP	24C1
C608	CAP	31A6
C609	CAP	31A4
C610	CAP	26A3
C611	CAP	15D7
C612	CAP	15D7
C613	CAP	15D6
C614	CAP	31A6
C615	CAP	31A4
C616	CAP	24A3
C617	CAP	24A3
C618	CAP	25A6
C619	CAP	31C7
C620	CAP	31C7
C621	CAP	31D7
C622	CAP	31D7
C623	CAP	30D7
C624	CAP	17C1
C625	CAP	31A7
C626	CAP	25A6
C627	CAP	31A6
C628	CAP	13C8
C629	CAP_P	31A5
C630	CAP	31A6
C631	CAP	50C7
C632	CAP	50C7
C633	CAP	50C7
C634	CAP	50C7
C635	CAP_P	25A6
C636	CAP_P	25A8
C637	CAP	13C4
C638	CAP	13C8
C639	CAP	31A4
C640	CAP	31A3
C641	CAP	13B8

NOTICE OF PROPRIETARY PROPERTY

THE INFORMATION CONTAINED HEREIN IS THE PROPRIETARY PROPERTY OF APPLE COMPUTER, INC. THE POSSESSOR AGREES TO THE FOLLOWING

I TO MAINTAIN THE DOCUMENT IN CONFIDENCE

II NOT TO REPRODUCE OR COPY IT

III NOT TO REVEAL OR PUBLISH IN WHOLE OR PART

APPLE COMPUTER INC.

SIZE	DRAWING NUMBER	REV.
D	051-6490	A

SCALE	SHT	OF
NONE	68	74

C642	CAP 45C7
C643	CAP 13C2
C644	CAP 13B2
C645	CAP 13B1
C646	CAP 13B1
C647	CAP 13C7
C648	CAP 13B7
C649	CAP 13C6
C650	CAP 13C7
C651	CAP 13C5
C652	CAP 26B2
C653	CAP 53B4
C654	CAP 53B4
C655	CAP 13C4
C656	CAP 13C2
C657	CAP 13B3
C658	CAP 13B2
C659	CAP 13B3
C660	CAP 13B1
C661	CAP 13B7
C662	CAP 13B7
C663	CAP 13B6
C664	CAP 13C5
C665	CAP 13C6
C666	CAP 13C5
C667	CAP 13C6
C668	CAP 13A5
C669	CAP 15C5
C670	CAP 15C6
C671	CAP 15C5
C672	CAP 17C1
C673	CAP 13B2
C674	CAP 13B6
C675	CAP 45B7
C676	CAP 13B3
C677	CAP 13B1
C678	CAP 13B3
C679	CAP 13B1
C680	CAP 13C3
C681	CAP 13B3
C682	CAP 13B3
C683	CAP 13C6
C684	CAP 13C7
C685	CAP 13C6
C686	CAP 13C6
C687	CAP 13A6
C688	CAP 13B7
C689	CAP 13C1
C690	CAP 13B2
C691	CAP 13C2
C692	CAP 30D6
C693	CAP 13C7
C694	CAP 13C5
C695	CAP 13C5
C696	CAP 13C5
C697	CAP 13C7
C698	CAP 13B5
C699	CAP 13A7
C700	CAP 13B7
C701	CAP 46B2
C702	CAP 13D4
C703	CAP 30D6
C704	CAP 30D5
C705	CAP 46A6
C706	CAP 46A6
C707	CAP 13B3
C708	CAP 13B3
C709	CAP 13C6
C710	CAP 13C6
C711	CAP 13B6
C712	CAP 13B1
C713	CAP 30D5
C714	CAP 13A5
C715	CAP 46B2
C716	CAP 13B2
C717	CAP 13C3
C718	CAP 13B1
C719	CAP 13D2
C720	CAP 13C3
C721	CAP 13D3
C722	CAP 13A7

C723	CAP 13A6
C724	CAP 13A5
C725	CAP 13B7
C726	CAP 17C2
C727	CAP 13D4
C728	CAP 13C3
C729	CAP 13B3
C730	CAP 13D3
C731	CAP 13D1
C732	CAP 13D1
C733	CAP 13C7
C734	CAP 13D2
C735	CAP 13A7
C736	CAP 13A5
C737	CAP 10D6
C738	CAP 10D7
C739	CAP 10D6
C740	CAP 10B5
C741	CAP 17C2
C742	CAP 53C6
C743	CAP 13B3
C744	CAP 13B1
C745	CAP 13C3
C746	CAP 13D3
C747	CAP 13D1
C748	CAP 13D2
C749	CAP 13D3
C750	CAP 13A6
C751	CAP 13A7
C752	CAP 13A6
C753	CAP 13A6
C754	CAP 13A5
C755	CAP 13A6
C756	CAP 10D5
C757	CAP 10D6
C758	CAP 10D4
C759	CAP 46D5
C760	CAP 18D6
C761	CAP 13B3
C762	CAP 13C1
C763	CAP 13D2
C764	CAP 13D3
C765	CAP 13D3
C766	CAP 13D1
C767	CAP 13B6
C768	CAP 13A6
C769	CAP 10D5
C770	CAP 10D6
C771	CAP 10C6
C772	CAP 10C6
C773	CAP 53C5
C774	CAP 13C1
C775	CAP 13C3
C776	CAP 13B2
C777	CAP 13C1
C779	CAP 13D1
C780	CAP 13D2
C781	CAP 13A5
C782	CAP 13A7
C783	CAP 46D5
C784	CAP 30A6
C785	CAP 30C3
C787	CAP 13D3
C788	CAP 13D3
C789	CAP 13D3
C790	CAP 13D1
C791	CAP 13A6
C792	CAP 13A6
C793	CAP 13B6
C794	CAP 13B5
C795	CAP 30C3
C796	CAP 13C3
C797	CAP 13D3
C798	CAP 13D1
C799	CAP 13D1
C800	CAP 13D2
C801	CAP 13A7
C802	CAP 13A5
C803	CAP 13A6
C804	CAP 10D3
C805	CAP 13B2

C806	CAP 13C2
C807	CAP 13B2
C808	CAP 13D2
C809	CAP 13C3
C810	CAP 13D2
C811	CAP 13D2
C812	CAP 13C2
C813	CAP 13A5
C814	CAP 13A6
C815	CAP 13B6
C816	CAP 13A6
C817	CAP 13B6
C818	CAP 13A5
C819	CAP 17C2
C820	CAP 30C3
C821	CAP 13C1
C822	CAP 13C1
C823	CAP 13D7
C824	CAP 13D6
C825	CAP 13A7
C826	CAP 13A7
C827	CAP 13B5
C828	CAP 13C1
C829	CAP 13C2
C830	CAP 13C3
C831	CAP 13D3
C832	CAP 13D7
C833	CAP 13D3
C834	CAP 13D6
C835	CAP 13B3
C836	CAP 13B6
C837	CAP 13B7
C838	CAP 13A7
C839	CAP 13B6
C840	CAP 30A6
C841	CAP 13D4
C842	CAP 13D6
C843	CAP 13C7
C844	CAP 13D6
C845	CAP 13D6
C846	CAP 13D7
C847	CAP 14A7
C848	CAP 32D5
C849	CAP 13C6
C850	CAP 13B3
C851	CAP 13B3
C852	CAP 13B2
C853	CAP 14A7
C854	CAP 11D3
C855	CAP 13B5
C856	CAP 13A7
C857	CAP 13B6
C858	CAP 15D4
C859	CAP 15D3
C860	CAP 15D4
C861	CAP 46A1
C862	CAP 46B7
C863	CAP 13C2
C864	CAP 17C2
C865	CAP 13B1
C866	CAP 13C3
C867	CAP 13C3
C868	CAP 13C2
C869	CAP 13D5
C870	CAP 13D6
C871	CAP 13D6
C872	CAP 13D5
C873	CAP 13D5
C874	CAP 13D5
C875	CAP 13B3
C876	CAP 13B5
C877	CAP 13B7
C878	CAP 13B7
C879	CAP 13B2
C880	CAP 13B5
C881	CAP 13B3
C882	CAP 13B1
C883	CAP 13B2
C884	CAP 13D6
C885	CAP 13D7
C886	CAP 13D5

C887	CAP 13D7
C888	CAP 13D6
C889	CAP 13D6
C890	CAP 13D7
C891	CAP 13D6
C892	CAP 13C4
C893	CAP 13C1
C894	CAP 13C2
C895	CAP 13D5
C896	CAP 13D5
C897	CAP 13D6
C898	CAP 13D5
C899	CAP 13D5
C900	CAP 13D7
C901	CAP 13D7
C902	CAP 13C7
C903	CAP 13B2
C904	CAP 13B6
C905	CAP 10B7
C906	CAP 10B7
C907	CAP 10B8
C908	CAP 15C2
C909	CAP 15C2
C910	CAP 15C1
C911	CAP 39C2
C912	CAP 10B8
C913	CAP 10B7
C914	CAP 17C2
C915	CAP 53D7
C916	CAP 14A8
C917	CAP 39C5
C918	CAP 53D6
C919	CAP 40C7
C920	CAP 40C1
C921	CAP 40C5
C922	CAP 17C1
C923	CAP 40B5
C924	CAP 40B7
C925	CAP 17C2
C926	CAP 52C1
C927	CAP 52B1
C928	CAP_P 49B4
C929	CAP 16A7
C930	CAP 52B8
C931	CAP 52B5
C932	CAP 52A5
C933	CAP 52A6
C934	CAP 52B1
C935	CAP_P 49B3
C936	CAP 17C2
C937	CAP 52C7
C938	CAP 52A4
C939	CAP 52A6
C940	CAP 52A5
C941	CAP 52C5
C942	CAP 8C3
C943	CAP 17A3
C944	CAP 47D3
C945	CAP 17A2
C946	CAP 8A6
C947	CAP_P 47C1
C948	CAP 51B4
C949	CAP 47C5
C950	CAP 47D4
C951	CAP 47D4
C952	CAP 47D4
C953	CAP 47D4
C954	CAP 4C2
C955	CAP 52D4
C956	CAP 52D5
C957	CAP_P 47B1
C958	CAP 9D4
C959	CAP 51C4
C960	CAP 47B2
C961	CAP 9C2
C962	CAP 51C3
C963	CAP 47D4
C964	CAP 47D4
C965	CAP 47D4
C966	CAP 47D4
C967	CAP 9C1

NOTICE OF PROPRIETARY PROPERTY

THE INFORMATION CONTAINED HEREIN IS THE PROPRIETARY PROPERTY OF APPLE COMPUTER, INC. THE POSSESSOR AGREES TO THE FOLLOWING

I TO MAINTAIN THE DOCUMENT IN CONFIDENCE

II NOT TO REPRODUCE OR COPY IT

III NOT TO REVEAL OR PUBLISH IN WHOLE OR PART

APPLE COMPUTER INC.

SIZE D | DRAWING NUMBER 051-6490 | REV. A

SCALE NONE | SHT 69 OF 74

C968 CAP 51C4
C969 CAP 9D4
C970 CAP 52D5
C971 CAP 52D5
C972 CAP 9C2
C973 CAP 9C1
C974 CAP 9D1
C975 CAP 51C4
C976 CAP 9C2
C977 CAP 9D1
C978 CAP 52D5
C979 CAP 52D5
C980 CAP 9C2
C981 CAP 9C2
C982 CAP 9D2
C983 CAP 9D3
C984 CAP 51C3
C985 CAP 52D4
C986 CAP 52D5
C987 CAP 9D2
C988 CAP 9D3
C989 CAP 51C3
C990 CAP 9C1
C991 CAP 9D1
C992 CAP 9D3
C993 CAP 9C1
C994 CAP 9C2
C995 CAP 9D2
C996 CAP 9A6
C997 CAP 9A5
C998 CAP 9D2
C999 CAP 9D1
C1000 CAP 51B6
C1001 CAP 9A5
C1002 CAP 9A6
C1003 CAP 9D1
C1004 CAP 51B6
C1005 CAP 51C4
C1006 CAP 47C2
C1007 CAP 9C2
C1008 CAP 9B5
C1009 CAP 9A6
C1010 CAP 9B5
C1011 CAP 9B5
C1012 CAP 9A6
C1013 CAP 9D2
C1014 CAP 9D2
C1015 CAP 51B7
C1016 CAP 9C1
C1017 CAP 9A5
C1018 CAP 9A5
C1019 CAP 51C6
C1020 CAP 9C1
C1021 CAP 9C1
C1022 CAP 9B6
C1023 CAP 9A5
C1024 CAP 9A5
C1025 CAP 9B5
C1026 CAP 9D2
C1027 CAP 9B6
C1028 CAP 9A5
C1029 CAP 47B4
C1030 CAP 47B2
C1031 CAP 9A5
C1032 CAP 9C2
C1033 CAP 9C1
C1034 CAP 47B2
C1035 CAP 4D3
C1036 CAP 4D3
C1037 CAP 9C1
C1038 CAP 47B4
C1039 CAP 47C5
C1040 CAP 9C2
C1041 CAP 9D3
C1042 CAP 9C2
C1043 CAP 9D2
C1044 CAP 47D7
C1045 CAP 47B7
C1046 CAP 47C1
C1047 CAP 47D5
C1048 CAP 47C2

C1049 CAP 47B7
C1050 CAP 47C7
C1051 CAP 47B6
C1052 CAP 47C8
C1053 CAP 48A8
C1054 CAP 9B2
C1055 CAP 9B2
C1056 CAP 9B1
C1057 CAP 9B1
C1058 CAP 9B1
C1101 CAP 11D3
C1601 CAP 16D7
C1602 CAP 16D3
C1603 CAP 16D3
C1701 CAP 17D7
C1702 CAP 17D7
C1801 CAP 18D5
C1802 CAP 18A7
C1901 CAP 9A6
C1902 CAP 9A5
C1903 CAP 9A5
C1904 CAP 9A5
C1910 CAP 9A5
C1911 CAP 9B2
C1912 CAP 9B2
C1913 CAP 9B1
C1914 CAP 9B1
C2201 CAP 22C8
C2202 CAP 22C4
C2301 CAP 23C8
C2302 CAP 23C4
C2501 CAP_P 25A8
C3001 CAP 30C5
C3002 CAP 30D5
C3003 CAP 30D5
C3004 CAP 30D4
C3005 CAP 30D4
C3201 CAP 32D4
C3901 CAP 39D1
C4081 CAP 48C7
C4301 CAP 43A6
C4502 CAP_P 45C5
C4701 CAP 47B6
D1 DIODE_DUAL_6P 38A7
D2 DIODE_DUAL_6P 38A7
D3 DIODE_DUAL_6P 38A7
D4 DIODE_DUAL_6P 38B7
D5 ZENER_MMBZ15VDLT1 42B6
D6 DIODE_DUAL_6P 27D4
D7 DIODE_DUAL_6P 27D4
D8 DIODE 38D6
D9 DIODE 37B8
D10 DIODE_SCHOT 25B8
D11 DIODE_SCHOT 46D7
D12 DIODE_SCHOT 46D7
D13 DIODE_SCHOT 49C7
D14 DIODE_SCHOT 49B5
D15 DIODE_SCHOT 51B4
D16 DIODE_SCHOT 52C5
D17 DIODE_SCHOT 52B5
D18 DIODE_SCHOT 51C6
D19 DIODE_SCHOT 48D6
D20 DIODE_SCHOT 47D5
D21 DIODE_SCHOT 47B5
D22 ZENER_MMBZ15VDLT1 44C2
D23 DIODE_SCHOT_3P 44A1
D24 ZENER_MMBZ15VDLT1 43B2
D25 ZENER 38B6
D26 ZENER_MMBZ15VDLT1 43B2
D27 DIODE_DUAL_6P 27B4
D28 DIODE_DUAL_6P 27B4
D29 ZENER_MMBZ15VDLT1 42B5
D30 DIODE_SCHOT 50C5
D31 DIODE_SCHOT 50B3
D32 DIODE_SCHOT 50B5
D33 DIODE_SCHOT 48B6
D34 DIODE_SCHOT 50B1
D35 DIODE_SCHOT 46D6
D36 DIODE_SCHOT 46D6
D37 DIODE_SCHOT 52B2
D38 DIODE_SCHOT 52C6

D39 DIODE_SCHOT 52B4
D40 DIODE_SCHOT 52A4
D41 DIODE_SCHOT 47C4
D42 DIODE_SCHOT 51B5
D43 DIODE_SCHOT 47B3
D44 DIODE_SCHOT 47D2
D45 DIODE_SCHOT 47D6
D46 DIODE_SCHOT 51B2
D4901 DIODE_SCHOT 49B2
DS1 LED 37A2
DS2 LED 37A1
DS3 LED 37A1
DS4 LED 32A3
DS5 LED 53A5
DS6 LED 53A6
DS7 LED 40B2
DS8 LED 40B6
DS9 LED 52D6
DS10 LED 53A3
F1 FUSE 35A7
F2 FUSE 38D5
F3 FUSE 38D5
FL1 FILTER_12P 44B3
FL2 FILTER_LC 27C6
FL3 FILTER_LC 27C6
FL4 FILTER_LC 27B6
J1 CON_RJ45 37C1
J2 CON_FWVERT_SKT 38C1
J3 CON_F8RT_S_TH1 44B1
J4 CON_F4RT_USB_UPRIGHT 35C3
J5 CON_FWVERT_SKT 38D1
J6 CON_F4RT_USB_UPRIGHT 35B3
J7 CON_F4RT_USB_UPRIGHT 35D3
J8 CON_F4RT_S4MT_TH1 43C1
J9 CON_F14RT_D4MT_TH1 27C5
J10 CON_F4RT_S4MT_TH1 42C7
J11 CON_F184ST_DDRDIMM 17D5
J12 CON_F21ST_D2MT_SM 26C3
J13 CON_M40SM_635 31D6
J14 CON_M16ST_D_TH 31B5
J15 CON_M40ST_NC20 40D6
J16 CON_M40ST_NC20 40D2
J17 CON_M16ST_MICROFIT 52D8
J18 CON_M4ST_LCK 36B4
J19 CON_37SM_MTOR 9C5
J20 CON_38SM_MTOR 9D7
J21 CON_M3ST_LCK 47C8
J22 CON_F20SM_KX 9B3
J23 CON_F1ST_S2MT_SM 30B7
J24 CON_M12ST_SM 31B3
J25 CON_F100RT_LP_SM 33D3
J26 CON_F200RT_DDRDIMM_SM2 16D5
J27 CON_F1ST_S2MT_SM 9C3
J28 CON_F10ST_D_SMA 31D2
J29 CON_M6ST_BTRY 8B6
J30 CON_38SM_MTOR 9D5
J31 CON_38SM_MTOR 9C7
J32 CON_F12RT_S2MT_SM 9B8
J4501 CON_F4ST_S2MT_SM 45C6
J4502 CON_F4ST_S2MT_SM 45C6
JAZ1 TP 53A4
L1 IND 38D4
L2 IND 35A5
L3 IND 38D4
L4 IND 35A5
L5 FILTER_4P 38C2
L6 FILTER_4P 38C2
L7 FILTER_4P 38D2
L8 FILTER_4P 38D2
L9 IND 27C2
L10 IND 44A5
L11 IND 44B5
L12 IND 50B3
L13 IND 24C7
L14 IND 10D5
L15 IND 10D7
L16 IND 30C3
L17 IND 10B8
L18 IND 10B8
L19 IND 49B4
L20 IND 47C3

L21 IND_3P 51B4
L22 IND_3P 52A3
L23 IND 52C3
L24 IND 47B3
L25 IND 44C3
L26 IND 44B1
L27 IND 43C3
L28 IND 35C5
L29 IND 35C5
L30 IND 35B5
L31 IND 35B5
L32 IND 38B6
L34 IND 43D3
L35 IND 43B3
L36 IND 42B6
L37 IND 35D5
L38 IND 35D5
L39 IND 43A3
L40 IND 44B1
L41 IND 44C3
L42 IND 43B3
L43 IND 43A4
L44 IND 43C3
L45 IND 43D3
L46 IND 42C6
L47 IND 43B3
L48 IND 42C6
L49 IND 42B5
L50 IND 42C5
L51 IND 42D6
L52 IND 42C5
L53 IND 42D5
L54 IND 44B5
L55 IND 44B5
L56 IND 46A1
L57 IND 46A1
L58 IND 34D6
L59 IND 45B5
L60 IND 45C5
L61 IND 44D7
L62 IND 44D7
L63 IND 41D4
L64 IND 26A5
L65 IND 31A7
L66 IND 31A3
L67 FILTER_4P 26A5
L68 IND 24C2
L69 IND 31A3
L70 IND 31A7
L71 FILTER_4P 26B5
L72 IND 31A7
L73 IND 31A3
L74 FILTER_4P 26C5
L75 IND 31A7
L76 FILTER_4P 26D5
L77 IND 31B7
L78 IND 31A3
L79 IND 45C7
L80 IND 31B3
L81 IND 45B7
L82 IND 26D5
L83 IND 45B7
L84 IND 52D7
L85 IND 52D7
L86 IND 52D7
L2401 IND 24C7
L2501 IND 25A6
Q1 TRA_2N7002 53C2
Q2 TRA_2N7002 44A7
Q3 TRA_2N7002 44B7
Q4 TRA_2N7002 44C4
Q5 TRA_2N7002 43A5
Q6 TRA_2N7002 53C4
Q7 TRA_IRLR8203 50B4
Q8 TRA_IRLR8503 50B4
Q9 TRA_IRLR8503 50C4
Q10 TRA_2N7002 24B7
Q11 TRA_FDC602P 53C2
Q12 TRA_2N3904 46D7
Q13 TRA_2N7002 53B2
Q14 TRA_2N7002 53C7

NOTICE OF PROPRIETARY PROPERTY

THE INFORMATION CONTAINED HEREIN IS THE PROPRIETARY PROPERTY OF APPLE COMPUTER, INC. THE POSSESSOR AGREES TO THE FOLLOWING

I TO MAINTAIN THE DOCUMENT IN CONFIDENCE

II NOT TO REPRODUCE OR COPY IT

III NOT TO REVEAL OR PUBLISH IN WHOLE OR PART

APPLE COMPUTER INC.

SIZE D | DRAWING NUMBER 051-6490 | REV. A

SCALE NONE | SHT 70 OF 74

Q15	TRA_2N7002	53B7
Q16	TRA_2N7002	53A7
Q17	TRA_2N7002	53B6
Q18	TRA_2N7002	53A7
Q19	TRA_2N7002	53A6
Q20	TRA_FDC602P	53D7
Q21	TRA_2N7002	52C3
Q22	TRA_2N7002	52D3
Q23	TRA_2N7002	52C4
Q24	TRA_2N7002	52C3
Q25	TRA_IRF7811W	49B5
Q26	TRA_IRF7805	49B5
Q27	TRA_IRLR8203	51B4
Q28	TRA_IRLR8503	51B4
Q29	TRA_2N7002	47D8
Q30	TRA_2N3904	38C7
Q31	TRA_2N7002	43A8
Q32	TRA_2N7002	41C7
Q33	TRA_2N3904	45B2
Q34	TRA_IRLR8203	50A4
Q35	TRA_2N7002	42D4
Q37	TRA_FDC602P	53C6
Q38	TRA_2N7002	53B6
Q39	TRA_2N3904	52C7
Q40	TRA_IRLR8203	47C4
Q41	TRA_2N7002	8D5
Q42	TRA_2N7002	8C6
Q43	TRA_IRLR8203	47C4
Q44	TRA_IRLR8503	47C4
Q45	TRA_IRF7811W	52B4
Q46	TRA_IRF7805	52C4
Q47	TRA_IRLR8203	52A4
Q48	TRA_IRLR8503	52A4
Q49	TRA_IRLR8203	47B4
Q50	TRA_IRLR8503	47B4
Q51	TRA_IRLR8203	47B4
Q52	TRA_2N7002	48A7
Q53	TRA_FDC602P	48B7
Q4801	TRA_FDC602P	48D7
R1	RES	38D4
R2	RES	27B4
R3	RES	27B4
R4	RES	23A4
R5	RES	23A4
R6	RES	23A4
R7	RES	27B5
R8	RES	38C4
R9	RES	38C4
R10	RES	38C4
R11	RES	38C4
R12	RES	38C3
R13	RES	38C3
R14	RES	38C3
R15	RES	38C3
R16	RES	38B3
R17	RES	23A4
R18	RES	23A5
R19	RES	27B5
R20	RES	21C2
R21	RES	53D2
R22	RES	53C3
R23	RES	53D2
R24	RES	21A3
R25	RES	21A3
R26	RES	37B4
R27	RES	37C4
R28	RES	37B7
R29	RES	37B7
R30	RES	37C3
R31	RES	21A3
R32	RES	21A3
R33	RES	37C4
R34	RES	37C7
R35	RES	38D6
R36	RES	20B8
R37	RES	37C4
R38	RES	37C7
R39	RES	38D6
R40	RES	37C3
R41	RES	20B8
R42	RES	37B4
R43	RES	35D6
R44	RES	35D6
R45	RES	35C6
R46	RES	35C6
R47	RES	35B6
R48	RES	35B6
R49	RES	20B7
R50	RES	20B7
R51	RES	44C3
R52	RES	20C5
R53	RES	21A4
R54	RES	20D3
R55	RES	21A4
R56	RES	20D2
R57	RES	21A4
R58	RES	20D3
R59	RES	20C2
R60	RES	21A4
R61	RES	20A3
R62	RES	20A2
R63	RES	21A4
R64	RES	20D3
R65	RES	21A4
R66	RES	20D2
R67	RES	20D2
R68	RES	21A4
R69	RES	21A4
R70	RES	20D3
R71	RES	20D6
R72	RES	19A5
R73	RES	28C2
R74	RES	28D2
R75	RES	37B8
R76	RES	37B8
R77	RES	28D2
R78	RES	34A7
R79	RES	28C2
R80	RES	19A5
R81	RES	21A7
R82	RES	28B3
R83	RES	20A5
R84	RES	20G2
R85	RES	25D6
R86	RES	25D6
R87	RES	28B3
R88	RES	20A5
R89	RES	34D3
R90	RES	20G3
R91	RES	25D5
R92	RES	25C5
R93	RES	28A3
R94	RES	28A3
R95	RES	20A5
R96	RES	37B1
R97	RES	21A7
R98	RES	25D5
R99	RES	25D6
R100	RES	28A7
R101	RES	21A7
R102	RES	25C4
R103	RES	21B2
R104	RES	21B2
R105	RES	21C2
R106	RES	21C2
R107	RES	25C4
R108	RES	25C6
R109	RES	28B7
R110	RES	28D6
R111	RES	20G2
R112	RES	25D6
R113	RES	25C4
R114	RES	25C4
R115	RES	25C4
R116	RES	28C6
R117	RES	20G3
R118	RES	24D3
R119	RES	25C4
R120	RES	28C5
R121	RES	28D6
R122	RES	21A7
R123	RES	21D2
R124	RES	25C4
R125	RES	28D5
R126	RES	28C6
R127	RES	34B8
R128	RES	34B8
R129	RES	34D3
R130	RES	20D2
R131	RES	20D3
R132	RES	21D2
R133	RES	24D3
R134	RES	28B8
R135	RES	28A8
R136	RES	28C5
R137	RES	44B7
R138	RES	32B3
R139	RES	32B4
R140	RES	21A7
R141	RES	25B4
R142	RES	28C5
R143	RES	20G2
R144	RES	25B2
R145	RES	24C3
R146	RES	21A7
R147	RES	21A7
R148	RES	21C2
R149	RES	25B5
R150	RES	50C5
R151	RES	22A4
R152	RES	22A5
R153	RES	21A7
R154	RES	20G3
R155	RES	20G2
R156	RES	21C2
R157	RES	25B2
R158	RES	21D2
R159	RES	21A7
R160	RES	19A5
R161	RES	18D1
R162	RES	43A5
R163	RES	22A4
R164	RES	20G3
R165	RES	37C4
R166	RES	22A4
R167	RES	21A7
R168	RES	19A7
R169	RES	19A4
R170	RES	24B5
R171	RES	24A6
R172	RES	24B6
R173	RES	24C7
R174	RES	24B6
R175	RES	42D4
R176	RES	22A4
R177	RES	19A5
R178	RES	24C7
R179	RES	24C7
R180	RES	42D5
R181	RES	43A4
R182	RES	43A4
R183	RES	24C3
R184	RES	25C5
R185	RES	24B6
R186	RES	21A6
R187	RES	21A6
R188	RES	24B3
R189	RES	16A3
R190	RES	16B2
R191	RES	24B6
R192	RES	19A3
R193	RES	19A3
R194	RES	24B6
R195	RES	19A3
R196	RES	19A3
R197	RES	18A8
R198	RES	19C1
R199	RES	24D6
R200	RES	24C6
R201	RES	16B3
R202	RES	16B2
R203	RES	18C8
R204	RES	18B8
R205	RES	18A8
R206	RES	24D7
R207	RES	25D2
R208	RES	25D2
R209	RES	16B3
R210	RES	19B8
R211	RES	18C7
R212	RES	32B3
R213	RES	25C4
R214	RES	29B5
R215	RES	18C7
R216	RES	18B7
R217	RES	18D3
R218	RES	32D6
R219	RES	32D6
R220	RES	18C7
R221	RES	18D1
R222	RES	18D3
R223	RES	18D1
R224	RES	18C7
R225	RES	18D7
R226	RES	18C7
R227	RES	32C6
R228	RES	30C7
R229	RES	36C1
R230	RES	32B6
R231	RES	30C8
R232	RES	30C6
R233	RES	18B3
R234	RES	18D1
R235	RES	29B5
R236	RES	29C5
R237	RES	25C4
R238	RES	29C6
R239	RES	29B6
R240	RES	29B5
R241	RES	29C5
R242	RES	29B6
R243	RES	29C6
R244	RES	29C4
R245	RES	29B4
R246	RES	25B7
R247	RES	29B7
R248	RES	29C7
R249	RES	29B7
R250	RES	29C7
R251	RES	53B3
R252	RES	32C7
R253	RES	32C7
R254	RES	36B4
R255	RES	32C6
R256	RES	32C7
R257	RES	36B3
R258	RES	39D5
R259	RES	32C7
R260	RES	14D4
R261	RES	14D4
R262	RES	32C7
R263	RES	39D4
R264	RES	30D1
R265	RES	40B4
R266	RES	39C6
R267	RES	30B1
R268	RES	40B4
R269	RES	36C4
R270	RES	39D2
R271	RES	30B3
R272	RES	30B3
R273	RES	39D2
R274	RES	30C7
R275	RES	36C4
R276	RES	30C8
R277	RES	53B2
R278	RES	53B3
R279	RES	53B2
R280	RES	46D8
R281	RES	46D7
R282	RES	46D7
R283	RES	53B3
R284	RES	53B3
R285	RES	33C1

NOTICE OF PROPRIETARY PROPERTY

THE INFORMATION CONTAINED HEREIN IS THE PROPRIETARY PROPERTY OF APPLE COMPUTER, INC. THE POSSESSOR AGREES TO THE FOLLOWING

I TO MAINTAIN THE DOCUMENT IN CONFIDENCE

II NOT TO REPRODUCE OR COPY IT

III NOT TO REVEAL OR PUBLISH IN WHOLE OR PART

APPLE COMPUTER INC.

SIZE	DRAWING NUMBER	REV.
D	051-6490	A

SCALE	SHT	OF
NONE	71	74

R286	RES	14A3
R287	RES	46D5
R288	RES	14D4
R289	RES	30C8
R290	RES	46D8
R291	RES	30C7
R292	RES	30C7
R293	RES	33C4
R294	RES	30C1
R295	RES	49B3
R296	RES	49B7
R297	RES	46D6
R298	RES	46B1
R299	RES	49B3
R300	RES	53A5
R301	RES	49B5
R302	RES	53A6
R303	RES	36D7
R304	RES	49B3
R305	RES	49B4
R306	RES	30B8
R307	RES	36D7
R308	RES	9C3
R309	RES	49B7
R310	RES	11A4
R311	RES	4B8
R312	RES	4A8
R313	RES	9B4
R314	RES	9C4
R315	RES	49B3
R316	RES	49B7
R317	RES	49C5
R318	RES	49C6
R319	RES	11A4
R320	RES	49B5
R321	RES	11A4
R322	RES	52C3
R323	RES	52D4
R324	RES	10C6
R325	RES	10C6
R326	RES	10C6
R327	RES	10C6
R328	RES	31D3
R329	RES	31D3
R330	RES	52A8
R331	RES	52B8
R332	RES	52A7
R333	RES	49B4
R334	RES	51B2
R335	RES	52A5
R336	RES	52C5
R337	RES	52B5
R338	RES	11B5
R339	RES	11B5
R340	RES	11B5
R341	RES	11B5
R342	RES	11C7
R343	RES	11B6
R344	RES	11C7
R345	RES	11C7
R346	RES	7C7
R347	RES	7C7
R348	RES	7C7
R349	RES	7B7
R350	RES	7A7
R351	RES	11A5
R352	RES	11B6
R353	RES	11C7
R354	RES	11A6
R355	RES	11B7
R356	RES	11C5
R357	RES	11C6
R358	RES	11A7
R359	RES	11A7
R360	RES	11B6
R361	RES	47B3
R362	RES	47B3
R363	RES	11C6
R364	RES	11C6
R365	RES	11C5
R366	RES	11A7

R367	RES	11C5
R368	RES	11C6
R369	RES	51C6
R370	RES	52D6
R371	RES	51B6
R372	RES	48D4
R374	RES	6C6
R375	RES	6C6
R376	RES	6C6
R377	RES	6C6
R378	RES	6C7
R379	RES	6C7
R380	RES	6C7
R381	RES	6C7
R382	RES	6C8
R383	RES	6C8
R384	RES	47C5
R385	RES	48D6
R386	RES	47B5
R387	RES	47B5
R388	RES	47B6
R389	RES	47B6
R390	RES	37C1
R391	RES	37C2
R392	RES	43B3
R393	RES	37C2
R394	RES	37C2
R395	RES	38B7
R396	RES	35A7
R397	RES	28A6
R398	RES	35A6
R399	RES	28B6
R400	RES	43C4
R401	RES	28B5
R402	RES	38B4
R403	RES	21B2
R404	RES	38D8
R405	RES	44B4
R406	RES	43D4
R407	RES	42C5
R408	RES	28A5
R409	RES	38D7
R410	RES	42B5
R411	RES	38C5
R412	RES	43C4
R413	RES	45B4
R414	RES	45C5
R415	RES	21A3
R416	RES	21A3
R417	RES	38C7
R418	RES	38C6
R419	RES	43D4
R420	RES	42B4
R421	RES	45C5
R422	RES	38C6
R423	RES	38B5
R424	RES	38C7
R425	RES	38C7
R426	RES	28A5
R427	RES	28B5
R428	RES	21A3
R429	RES	21A3
R430	RES	38B6
R431	RES	38C7
R432	RES	38C7
R433	RES	38B6
R434	RES	42C4
R435	RES	42C4
R436	RES	42B4
R437	RES	42B4
R438	RES	38C8
R439	RES	28B4
R440	RES	43A8
R441	RES	43D6
R442	RES	42C4
R443	RES	28A4
R444	RES	43C6
R445	RES	28B6
R446	RES	43C6
R447	RES	43D6
R448	RES	42B3

R449	RES	28A6
R450	RES	35B5
R451	RES	35B5
R452	RES	35C5
R453	RES	35C5
R454	RES	35D5
R455	RES	35D5
R456	RES	35B7
R457	RES	35B7
R458	RES	35C7
R459	RES	35C7
R460	RES	35D7
R461	RES	35D7
R462	RES	42B3
R463	RES	20B8
R464	RES	34C3
R465	RES	34C3
R466	RES	34C2
R467	RES	34C2
R468	RES	34C3
R469	RES	34C3
R470	RES	34B3
R471	RES	44B4
R472	RES	43C7
R473	RES	43D7
R474	RES	42C3
R475	RES	50B1
R476	RES	34B3
R477	RES	43B4
R478	RES	43B5
R479	RES	21A6
R480	RES	34C3
R481	RES	41B6
R482	RES	41C6
R483	RES	21A6
R484	RES	34A7
R485	RES	37B2
R486	RES	37B2
R487	RES	45B5
R488	RES	45C4
R489	RES	45C3
R490	RES	34B3
R491	RES	37B2
R492	RES	37B1
R493	RES	50C3
R494	RES	34B7
R495	RES	44C7
R496	RES	50C2
R497	RES	44B7
R498	RES	45B2
R499	RES	50C2
R500	RES	21C2
R501	RES	41C7
R502	RES	41D7
R503	RES	50B6
R504	RES	50C2
R505	RES	50C5
R506	RES	21A7
R507	RES	53D4
R508	RES	44B7
R509	RES	21A7
R510	RES	32A4
R511	RES	32A3
R512	RES	44B8
R513	RES	44C7
R514	RES	44B7
R515	RES	50B5
R516	RES	44B7
R517	RES	41C5
R518	RES	48B5
R519	RES	48A5
R520	RES	44B8
R521	RES	41C5
R522	RES	44C4
R523	RES	50C6
R524	RES	41B4
R525	RES	44D4
R526	RES	44C4
R527	RES	50B7
R528	RES	41C4
R529	RES	50C6

R530	RES	53C5
R531	RES	41C2
R532	RES	41C4
R533	RES	28D6
R534	RES	28C6
R535	RES	29C5
R536	RES	29B5
R537	RES	29C4
R538	RES	29B4
R539	RES	29B6
R540	RES	26A6
R541	RES	28A6
R542	RES	28B6
R543	RES	29C6
R544	RES	29B7
R545	RES	18A8
R546	RES	26A5
R547	RES	26A6
R548	RES	29C7
R549	RES	18A8
R550	RES	26A5
R551	RES	26A5
R552	RES	28C8
R553	RES	28D8
R554	RES	24B7
R555	RES	24C3
R556	RES	24C3
R557	RES	24C2
R558	RES	19A7
R559	RES	26B6
R560	RES	28C7
R561	RES	28D7
R562	RES	24B6
R563	RES	29C5
R564	RES	25C4
R565	RES	30D5
R566	RES	32D6
R567	RES	26B5
R568	RES	26B5
R569	RES	24B3
R570	RES	26B6
R571	RES	30D8
R572	RES	30D8
R573	RES	30C6
R574	RES	30C8
R575	RES	36C1
R576	RES	36C1
R577	RES	30C7
R578	RES	32B6
R579	RES	32A8
R580	RES	18B3
R581	RES	26B5
R582	RES	26C5
R583	RES	28D3
R584	RES	31D6
R585	RES	31D6
R586	RES	30D6
R587	RES	18B3
R588	RES	28C3
R590	RES	30D6
R591	RES	26C6
R592	RES	25A7
R593	RES	26C5
R594	RES	26D5
R595	RES	28D5
R596	RES	28D5
R597	RES	28C3
R598	RES	28D3
R600	RES	26D6
R601	RES	53B3
R602	RES	25A7
R603	RES	26D5
R604	RES	46A3
R605	RES	46A5
R606	RES	46A5
R607	RES	53A5
R608	RES	53A4
R609	RES	53A4
R610	RES	48B4
R611	RES	30A6
R612	RES	53A4

NOTICE OF PROPRIETARY PROPERTY

THE INFORMATION CONTAINED HEREIN IS THE PROPRIETARY PROPERTY OF APPLE COMPUTER, INC. THE POSSESSOR AGREES TO THE FOLLOWING

I TO MAINTAIN THE DOCUMENT IN CONFIDENCE

II NOT TO REPRODUCE OR COPY IT

III NOT TO REVEAL OR PUBLISH IN WHOLE OR PART

APPLE COMPUTER INC.

SIZE	DRAWING NUMBER	REV.
D	051-6490	A

SCALE	SHT	OF
NONE	72	74

R613	RES	31A8
R614	RES	53A4
R615	RES	53A5
R616	RES	32C7
R617	RES	32C7
R618	RES	32C7
R619	RES	18D6
R620	RES	30D5
R621	RES	32C6
R622	RES	18C6
R623	RES	39D5
R624	RES	39A7
R625	RES	14B6
R626	RES	39D2
R627	RES	39D5
R628	RES	30D5
R629	RES	30D5
R630	RES	30D5
R631	RES	10B5
R632	RES	10A3
R633	RES	10A3
R634	RES	10D5
R635	RES	39D3
R636	RES	46B6
R637	RES	36B3
R638	RES	10A3
R639	RES	10A3
R640	RES	39A5
R641	RES	30D1
R642	RES	10B3
R643	RES	10B3
R644	RES	10B5
R645	RES	53B6
R646	RES	46C1
R647	RES	36B4
R648	RES	46B2
R649	RES	46C3
R650	RES	30A2
R651	RES	30A2
R652	RES	10D7
R653	RES	46B7
R654	RES	46A5
R655	RES	46B2
R656	RES	46A6
R657	RES	46C3
R658	RES	46C3
R659	RES	46C2
R660	RES	30A2
R661	RES	30C7
R662	RES	10C6
R663	RES	10C6
R664	RES	53B6
R665	RES	46C1
R666	RES	30A6
R667	RES	18D6
R668	RES	31C3
R669	RES	31C2
R670	RES	31C2
R671	RES	46C1
R672	RES	30A6
R673	RES	36B4
R674	RES	10D3
R675	RES	10D3
R676	RES	46B4
R677	RES	46C2
R678	RES	30C8
R679	RES	39A2
R680	RES	30A8
R681	RES	14A7
R682	RES	52D6
R683	RES	30A2
R684	RES	36C1
R685	RES	53B6
R686	RES	46A7
R687	RES	46A7
R688	RES	46C2
R689	RES	46C3
R690	RES	46D3
R691	RES	30B3
R692	RES	46A3
R693	RES	46D8
R694	RES	30B3
R695	RES	30A5
R696	RES	14A7
R697	RES	14A3
R698	RES	46A3
R699	RES	46D3
R700	RES	46D3
R701	RES	46D4
R702	RES	36C4
R703	RES	14A8
R704	RES	14D4
R705	RES	31B3
R706	RES	31C3
R707	RES	36D4
R708	RES	30C8
R709	RES	36C4
R710	RES	30A5
R711	RES	30A6
R712	RES	11A3
R713	RES	11A3
R714	RES	36B7
R715	RES	14A7
R716	RES	46B8
R717	RES	46C3
R718	RES	30B3
R719	RES	32D5
R720	RES	11D3
R721	RES	52C8
R722	RES	46C6
R723	RES	30B3
R724	RES	30C3
R725	RES	46B6
R726	RES	46B7
R727	RES	30C7
R728	RES	30B3
R729	RES	46C6
R730	RES	46C7
R731	RES	46B6
R732	RES	46C7
R733	RES	46B7
R734	RES	46B7
R735	RES	30C7
R736	RES	30B3
R737	RES	40C7
R738	RES	53B7
R739	RES	53C7
R740	RES	53A7
R741	RES	53A6
R742	RES	30B3
R743	RES	40C4
R744	RES	40C7
R745	RES	40C3
R746	RES	30B8
R747	RES	30B6
R748	RES	10A5
R749	RES	30B8
R750	RES	30B8
R751	RES	53A8
R752	RES	11A3
R753	RES	39C2
R754	RES	39D4
R755	RES	10B7
R756	RES	10A7
R757	RES	11A4
R758	RES	40C1
R759	RES	39D2
R760	RES	40C5
R761	RES	39C5
R762	RES	30B3
R763	RES	30B3
R764	RES	11B4
R765	RES	11A4
R766	RES	11A3
R767	RES	39D2
R768	RES	39D5
R769	RES	53D7
R770	RES	53D7
R771	RES	10A7
R772	RES	11A4
R773	RES	39D2
R774	RES	39D4
R775	RES	40C7
R776	RES	11A4
R777	RES	11A4
R778	RES	14A8
R779	RES	40C1
R780	RES	40C3
R781	RES	40C5
R782	RES	40C7
R783	RES	40C4
R784	RES	40C7
R785	RES	40C4
R786	RES	40A4
R787	RES	40B4
R788	RES	40A7
R789	RES	40B7
R790	RES	40B7
R791	RES	40B7
R792	RES	40B2
R793	RES	40B6
R794	RES	52C7
R795	RES	52A6
R796	RES	17A8
R797	RES	52A5
R798	RES	52A5
R799	RES	52B8
R800	RES	47C3
R801	RES	47C3
R802	RES	52B5
R803	RES	52B5
R804	RES	52B6
R805	RES	52A3
R806	RES	52C6
R807	RES	52B5
R808	RES	52C3
R809	RES	17A8
R810	RES	52A5
R811	RES	52C5
R812	RES	8D6
R813	RES	8D6
R814	RES	52B3
R815	RES	52B3
R816	RES	8C6
R817	RES	8C6
R818	RES	8C5
R819	RES	8D4
R820	RES	8B7
R821	RES	8C7
R822	RES	8D3
R823	RES	8A5
R824	RES	8A5
R825	RES	17A3
R826	RES	8C7
R827	RES	51B5
R828	RES	8B7
R829	RES	8A7
R830	RES	8B7
R831	RES	8B6
R832	RES	11B6
R833	RES	11D7
R834	RES	8C5
R835	RES	8C5
R836	RES	8C2
R837	RES	8B2
R838	RES	8C2
R839	RES	8D3
R840	RES	7C7
R841	RES	7C7
R842	RES	7B7
R843	RES	7A7
R844	RES	7A7
R845	RES	7B7
R846	RES	7B7
R847	RES	7B7
R848	RES	7D5
R849	RES	7B7
R850	RES	4C2
R851	RES	7B7
R852	RES	11D7
R853	RES	11D7
R854	RES	11D7
R855	RES	11B6
R856	RES	7C5
R857	RES	7B5
R858	RES	7C5
R859	RES	7C5
R860	RES	7B5
R861	RES	11C7
R862	RES	11D7
R863	RES	11B6
R864	RES	11B7
R865	RES	11B7
R866	RES	11D6
R867	RES	11D5
R868	RES	11B7
R869	RES	11B5
R870	RES	11A5
R871	RES	51C3
R872	RES	51C3
R873	RES	51C5
R874	RES	11D6
R875	RES	11D5
R876	RES	11B7
R877	RES	11D5
R878	RES	11D6
R879	RES	11D6
R880	RES	51C3
R881	RES	51C3
R882	RES	7B5
R883	RES	51B6
R884	RES	51C5
R885	RES	11B6
R886	RES	11A6
R887	RES	11C6
R888	RES	51D5
R889	RES	11D6
R890	RES	11B8
R891	RES	4D6
R892	RES	11B7
R893	RES	11B7
R894	RES	11B8
R895	RES	4D2
R896	RES	47C5
R897	RES	47B5
R898	RES	47B5
R899	RES	47D6
R900	RES	47C5
R901	RES	4D3
R902	RES	7A4
R903	RES	7A4
R904	RES	7A4
R905	RES	7A4
R906	RES	7B4
R907	RES	7B4
R908	RES	47D6
R909	RES	7B5
R910	RES	7B5
R911	RES	7B5
R912	RES	7A5
R913	RES	7C4
R914	RES	7C4
R915	RES	7C4
R916	RES	7B4
R917	RES	7A4
R918	RES	7C4
R919	RES	7B4
R920	RES	7B4
R921	RES	7B5
R922	RES	7A5
R923	RES	7A5
R924	RES	7D5
R925	RES	7C5
R926	RES	7B4
R927	RES	48C5
R928	RES	47C5
R929	RES	47C5
R930	RES	48C5
R931	RES	47D7
R932	RES	47C7
R933	RES	47D7
R934	RES	47C8
R935	RES	47A5
R936	RES	47A5

NOTICE OF PROPRIETARY PROPERTY

THE INFORMATION CONTAINED HEREIN IS THE PROPRIETARY PROPERTY OF APPLE COMPUTER, INC. THE POSSESSOR AGREES TO THE FOLLOWING

I TO MAINTAIN THE DOCUMENT IN CONFIDENCE

II NOT TO REPRODUCE OR COPY IT

III NOT TO REVEAL OR PUBLISH IN WHOLE OR PART

APPLE COMPUTER INC.

SIZE	DRAWING NUMBER	REV.
D	051-6490	A

SCALE	SHT	OF
NONE	73	74

R937 RES 9B3
R938 RES 9B3
R939 RES 9A3
R940 RES 9A3
R941 RES 39D1
R943 RES 39D2
R944 RES 39D2
R945 RES 48B7
R946 RES 48B7
R947 RES 48B7
R948 RES 33D4
R949 RES 33D4
R950 RES 33D3
R951 RES 33C2
R3001 RES 30A2
R3002 RES 30A2
R3801 RES 38B1
R4301 RES 43A7
R4401 RES 44A8
R4501 RES 45C6
R4502 RES 45B6
R4503 RES 45B6
R4504 RES 45C6
R4505 RES 45B6
R4506 RES 45B6
R4507 RES 45D5
R4701 RES 47B6
R4702 RES 47B6
R4703 RES 47B3
R4704 RES 47B3
R4705 RES 47B3
R4706 RES 47D3
R4707 RES 47D3
R4708 RES 47B5
R4801 RES 48C7
R5301 RES 53C1
RP1 RPAK4P 37C8
RP2 RPAK4P 38C7
RP3 RPAK4P 38B7
RP4 RPAK4P 21B5 21C5
RP5 RPAK4P 21B5
RP6 RPAK4P 21B5
RP7 RPAK4P 21B5
RP8 RPAK4P 20A2 20A3 20B2
RP9 RPAK4P 20C2 20C2 20C3 20C3
RP10 RPAK4P 21C7
RP11 RPAK4P 21B7
RP12 RPAK4P 21B7
RP13 RPAK4P 21B7
RP14 RPAK4P 21C7
RP15 RPAK4P 37B7 37B8
RP16 RPAK4P 37A4
RP17 RPAK4P 21C7
RP18 RPAK4P 21D7
RP19 RPAK4P 21D7
RP20 RPAK4P 21D7
RP21 RPAK4P 21D7
RP22 RPAK4P 20F2 20F3 20G2 20G3
RP23 RPAK4P 20E2 20E3
RP24 RPAK4P 21C5
RP25 RPAK4P 21C5 21D5
RP26 RPAK4P 21C5
RP27 RPAK4P 21D5
RP28 RPAK4P 21D5
RP29 RPAK4P 21D5
RP30 RPAK4P 19D7
RP31 RPAK4P 19C7
RP32 RPAK4P 19D7
RP33 RPAK4P 19B7
RP34 RPAK4P 19C7
RP35 RPAK4P 19B7
RP36 RPAK4P 19A7
RP37 RPAK4P 18B3 18C3 18C3
RP38 RPAK4P 32A6
RP39 RPAK4P 30D2
RP40 RPAK4P 19D7
RP41 RPAK4P 19C7
RP42 RPAK4P 19D7
RP43 RPAK4P 19C7
RP44 RPAK4P 19C7
RP45 RPAK4P 19B7

RP46 RPAK4P 19B7
RP47 RPAK4P 19A7
RP48 RPAK4P 18B3
RP49 RPAK4P 18B1 18B1 18C1
RP50 RPAK4P 18B1
RP51 RPAK4P 14B1 14C1
RP52 RPAK4P 14A1 14B1
RP53 RPAK4P 10C2
RP54 RPAK4P 33B7
RP55 RPAK4P 10C2
RP56 RPAK4P 33B7
RP57 RPAK4P 10C2
RP58 RPAK4P 33C7
RP59 RPAK4P 33C7
RP60 RPAK4P 30C2
RP61 RPAK4P 33B7
RP62 RPAK4P 14B3 14C3
RP63 RPAK4P 32B8
RP64 RPAK4P 33B7
RP65 RPAK4P 36C4
RP66 RPAK4P 30A8
RP67 RPAK4P 33B7
RP68 RPAK4P 14C3 14D3
RP69 RPAK4P 32A8
RP70 RPAK4P 36C7
RP71 RPAK4P 14C1 14D1
RP72 RPAK4P 33C7
RP73 RPAK4P 33C7
RP74 RPAK4P 30A8
RP75 RPAK4P 33C7
RP76 RPAK4P 36C7
RP77 RPAK4P 33C7
RP78 RPAK4P 7A7
RP79 RPAK4P 7A5 7C5
RP80 RPAK4P 21B7
RP81 RPAK4P 21B7
RP82 RPAK4P 21B7 21C7 21C7
RP83 RPAK4P 20B2 20B3 20B3
RP84 RPAK4P 20B2 20B2 20B3
RP85 RPAK4P 20B3 20C2 20C3
RP86 RPAK4P 21B5
RP87 RPAK4P 21B5
RP88 RPAK4P 21C5
RP89 RPAK4P 21C5
RP90 RPAK4P 21C7
RP91 RPAK4P 21C7 21D7
RP92 RPAK4P 21C7
RP93 RPAK4P 20E2 20E3
RP94 RPAK4P 20F2 20F3
RP95 RPAK4P 20F2 20F2 20F3
RP96 RPAK4P 21C5
RP97 RPAK4P 21D5
RP98 RPAK4P 18B3 18C3 18C3
RP99 RPAK4P 18C1
RP100 RPAK4P 30A8
RP101 RPAK4P 36B1
RP102 RPAK4P 14C4
RP103 RPAK4P 39B2 39C2
RP104 RPAK4P 39B4 39B5 39C5
RP105 RPAK4P 14A4 14B4
RP106 RPAK4P 39B2
RP107 RPAK4P 39B4 39B4 39B5
RP108 RPAK4P 30A3 30B3
RP109 RPAK4P 14A4 14B4
RP110 RPAK4P 30A8
RP111 RPAK4P 39C4 39C4 39C5 39C5
RP112 RPAK4P 36C4
RP113 RPAK4P 30B8
RP114 RPAK4P 39A2 39B2
RP115 RPAK4P 39A4 39A5 39B4 39B5
RP116 RPAK4P 14A3 14B3
RP117 RPAK4P 30C1 30C1 30D1 30D1
RP118 RPAK4P 39C2
RP119 RPAK4P 36C1
S1 SWI_TACT_2P1 46B2
S2 SWI_TACT 46A3
SP1 SPRING_CLIP_1P_EMI 12D2
SP2 SPRING_CLIP_1P_EMI 12D2
SP3 SPRING_CLIP_1P_EMI 12D1
SP4 SPRING_CLIP_1P_EMI 12D1
T1 XFR_100BT_MDIX 37C3

U1 SWI_TPS2023 35A6
U2 SHNTREG_TLV431A 23A5
U3 VREG_LP2951 38D7
U4 FW802A 38C5
U5 SDRAM_DDR_4MX32 23D6 23D7
U6 OPAMP_TLV2362 42B3 42C3
U7 SHNTREG_TLV431A 20B8
U8 AMP_TPA6112A2 43D5
U10 AMP_TA2024 44B6
U11 UPD720101_FBGA 34C5
U12 SDRAM_DDR_4MX32 22D6 22D7
U13 OPAMP_TLV2362 45B3
U14 VREG_LP2951 41D6
U15 TAS3004 41C3
U16 SHNTREG_TLV431A 22A5
U17 SHNTREG_TLV431A 16B3
U18 CBTV4020 15D7
U19 VREG_LT1962 30D7
U20 VREG_LM1117 25A8
U21 VDET_MC33465N_22ATR 46A4
U22 CBTV4020 15B6
U23 MAX6328 46A5
U24 CLK_DR_PCK2059 10C4
U25 INTREPID 11D2 12D5 12D7 14D7 18D5 30C4 32D5 36C5 39D8
U26 M16C62 46C5
U27 CBTV4020 15D4
U28 VREG_TL431 46D8
U29 CBTV4020 15C2
U30 CLK_GEN_CY28512 10A6
U31 DCDC_SC2602 49B6
U32 SHNTREG_TLV431A 14A8
U33 LTC3707 52B6
U34 APOLLO_MPC7445_360 4C5 5D3 5D6
U35 TRA_IRF7410 53D2
U36 SDRAM_DDR_4MX32 23D2 23D4
U37 TRANSCEIVER_BCM5221 37C5
U38 SN74AUC1G04 32A3
U39 NV18B 19D6 20G5 20G7 24D4 25D3
U40 DCDC_SC2602 50C6
U41 SDRAM_DDR_4MX32 22D2 22D4
U42 FEPR_1MX8 32C2
U43 EEPROM_16KX8_M24128B 8B6
U44 AT90S1200 8C4
U45 DCDC_SC2602 51C5
U46 SN74LVC1G04 46D1
U47 LTC3707 47C6
U48 NC7WZ08 43A7 44A7
VR1 VREG_LM1117 41C7
VR2 VREG_EZ1582 48B5
VR3 VREG_EZ1582 53B4
VR4 VREG_EZ1582 48C5
XW1 SHORT 41B7
XW2 SHORT8L25_WITH_ALTS 50B2
XW3 SHORT 44A7
XW4 SHORT 41B7
XW5 SHORT 41B7
XW6 SHORT8L25_WITH_ALTS 50B4
XW7 SHORT8L25_WITH_ALTS 50C7
XW8 SHORT 44D8
XW9 SHORT 44D8
XW10 SHORT 44C8
XW11 SHORT 44D8
XW12 SHORT8L25_WITH_ALTS 49B3
XW13 SHORT8L25_WITH_ALTS 49B4
XW14 SHORT8L25_WITH_ALTS 49C5
XW15 SHORT8L25_WITH_ALTS 49A6
XW16 SHORT8L25_WITH_ALTS 52A3
XW17 SHORT8L25_WITH_ALTS 52B8
XW18 SHORT8L25_WITH_ALTS 52A3
XW19 SHORT8L25_WITH_ALTS 52B2
XW20 SHORT8L25_WITH_ALTS 52B3
XW21 SHORT8L25_WITH_ALTS 52A6
XW22 SHORT8L25_WITH_ALTS 52B5
XW23 SHORT8L25_WITH_ALTS 51B3
XW24 SHORT8L25_WITH_ALTS 51C4
XW25 SHORT8L25_WITH_ALTS 51C4
XW26 SHORT8L25_WITH_ALTS 47C3
XW27 SHORT8L25_WITH_ALTS 47C3
XW28 SHORT8L25_WITH_ALTS 47B1
XW29 SHORT8L25_WITH_ALTS 47C6

XW30 SHORT8L25_WITH_ALTS 47A3
XW31 SHORT8L25_WITH_ALTS 47B3
XW32 SHORT 41B7
XW33 SHORT 43B7
XW34 SHORT 41A7
XW35 SHORT 44A7
XW36 SHORT 44A7
XW37 SHORT 41B7
XW38 SHORT 41A7
XW39 SHORT8L25_WITH_ALTS 50B5
XW40 SHORT 44D7
XW41 SHORT8L25_WITH_ALTS 51B5
XW42 SHORT 30A5
XW43 SHORT 30A5
XW44 SHORT 30A5
XW45 SHORT 30A4
XW46 SHORT 30A4
XW47 SHORT 11A2
XW48 SHORT 18A5
XW49 SHORT 32B5
Y1 CRYSTAL 38C6
Y2 CRYSTAL_4PIN 24A3
Y3 CRYSTAL 46A6
Y4 CRYSTAL_4PIN 46B2
Y5 CRYSTAL 30A6
Y6 CRYSTAL 37B7
Y7 CRYSTAL 34D3
ZH3 MTGHOLE 41A7
ZH4 MTGHOLE 4B2
ZH5 SLOT 4B1
ZH6 SLOT 4B2
ZH7 MTGHOLE 4B1
ZT1 HOLE_VIA 20C2
ZT2 HOLE_VIA 20C2
ZT3 HOLE_VIA 20C2
ZT4 HOLE_VIA 20A2
ZT5 HOLE_VIA 20C2
ZT6 HOLE_VIA 20C2
ZT7 HOLE_VIA 20A2
ZT8 HOLE_VIA 20C2
ZT9 HOLE_VIA 20B2
ZT10 HOLE_VIA 20B2
ZT11 HOLE_VIA 20B2
ZT12 HOLE_VIA 20B2
ZT13 HOLE_VIA 20B2
ZT14 HOLE_VIA 20B2
ZT15 HOLE_VIA 20B2
ZT16 HOLE_VIA 20B2
ZT17 HOLE_VIA 20B2
ZT18 HOLE_VIA 20B2
ZT19 HOLE_VIA 20A2
ZT20 HOLE_VIA 20G2
ZT21 HOLE_VIA 20E2
ZT22 HOLE_VIA 20F2
ZT23 HOLE_VIA 20F2
ZT24 HOLE_VIA 20F2
ZT25 HOLE_VIA 20F2
ZT26 HOLE_VIA 20F2
ZT27 HOLE_VIA 20E2
ZT28 HOLE_VIA 20D2
ZT29 HOLE_VIA 20G2
ZT30 HOLE_VIA 20F2
ZT31 HOLE_VIA 20F2
ZT32 HOLE_VIA 20E2
ZT33 HOLE_VIA 20E2
ZT34 HOLE_VIA 20F2
ZT35 HOLE_VIA 20E2
ZT36 HOLE_VIA 20E2
ZT37 HOLE_VIA 20F2
ZT38 HOLE_VIA 20E2

NOTICE OF PROPRIETARY PROPERTY

THE INFORMATION CONTAINED HEREIN IS THE PROPRIETARY PROPERTY OF APPLE COMPUTER, INC. THE POSSESSOR AGREES TO THE FOLLOWING

I TO MAINTAIN THE DOCUMENT IN CONFIDENCE

II NOT TO REPRODUCE OR COPY IT

III NOT TO REVEAL OR PUBLISH IN WHOLE OR PART

APPLE COMPUTER INC.

SIZE	DRAWING NUMBER	REV.
D	051-6490	A

SCALE	SHT	OF
NONE	74	74