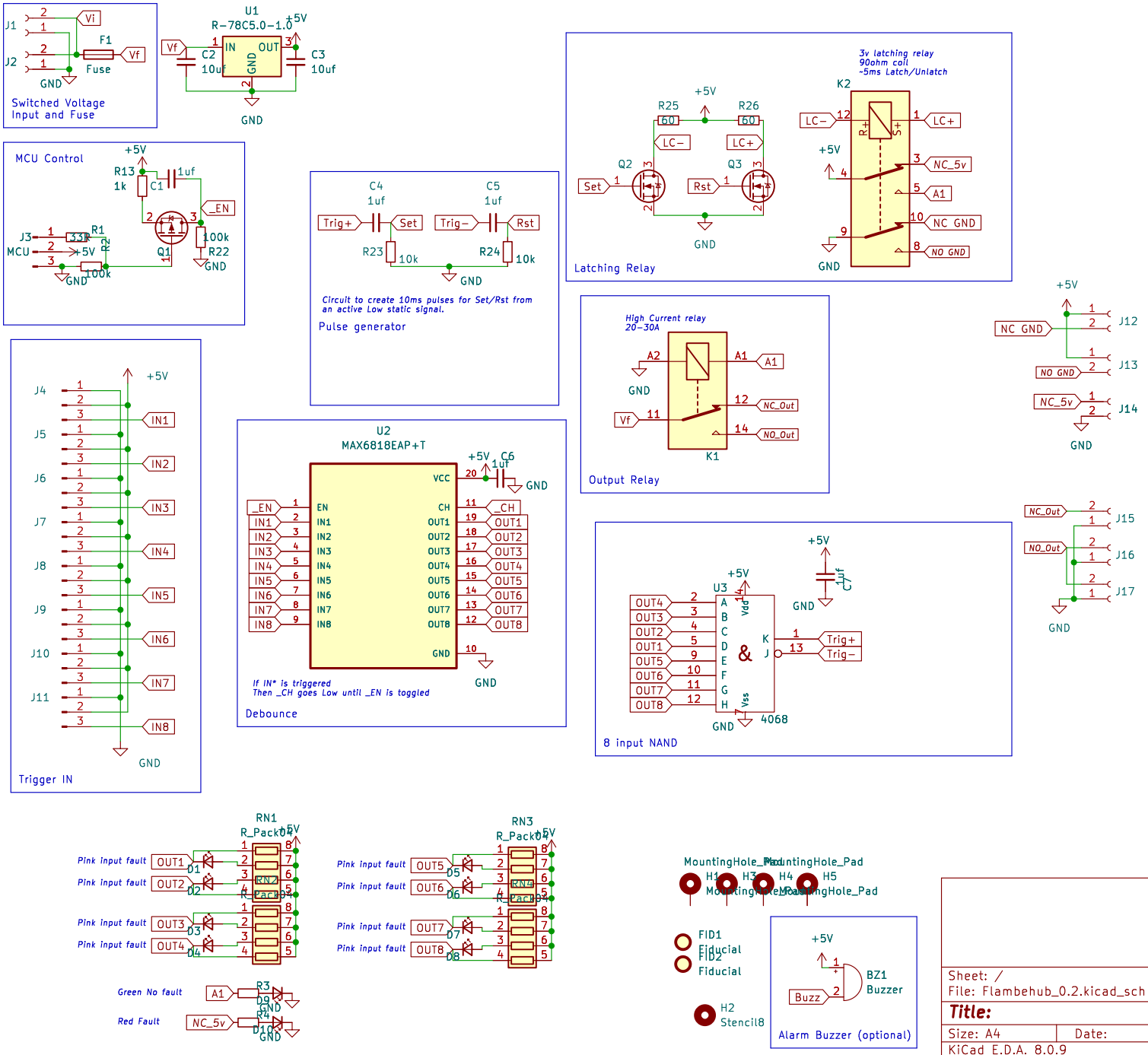
Switched Voltage Input and Fuse
J1
J2
Vi
Vf
F1
Fuse
GND
U1
R-78C5.0-1.0
IN
OUT
GND
C2 10uf
C3 10uf
+5V
MCU Control
R13 1k
C1 1uf
_EN
Q1
R22 100k
J3
MCU
R1 33k
R2 100k
Pulse generator
C4 1uf
C5 1uf
Trig+
Set
Trig−
Rst
R23 10k
R24 10k
Circuit to create 10ms pulses for Set/Rst from an active Low static signal.
Latching Relay
R25 60
R26 60
LC−
LC+
Q2
Q3
K2
3v latching relay
90ohm coil
~5ms Latch/Unlatch
NC_5v
A1
NC GND
NO GND
Output Relay
High Current relay
20-30A
A2
K1
NC_Out
NO_Out
J12
J13
J14
J15
J16
J17
Trigger IN
J4
J5
J6
J7
J8
J9
J10
J11
IN1
IN2
IN3
IN4
IN5
IN6
IN7
IN8
Debounce
U2
MAX6818EAP+T
C6 1uf
VCC
EN
CH
OUT1
OUT2
OUT3
OUT4
OUT5
OUT6
OUT7
OUT8
If IN* is triggered
Then _CH goes Low until _EN is toggled
8 input NAND
U3
4068
C7 1uf
Vdd
Vss
Trig+
Trig−
RN1
R_Pack04
RN2
RN3
RN4
Pink input fault
Green No fault
Red Fault
R3
R4
D9
D10
MountingHole_Pad
H1
H2
H3
H4
H5
FID1
FID2
Fiducial
Stencil8
Alarm Buzzer (optional)
BZ1
Buzzer
Sheet: /
File: Flambehub_0.2.kicad_sch
Title:
Size: A4
Date:
Rev:
KiCad E.D.A. 8.0.9
Id: 1/1