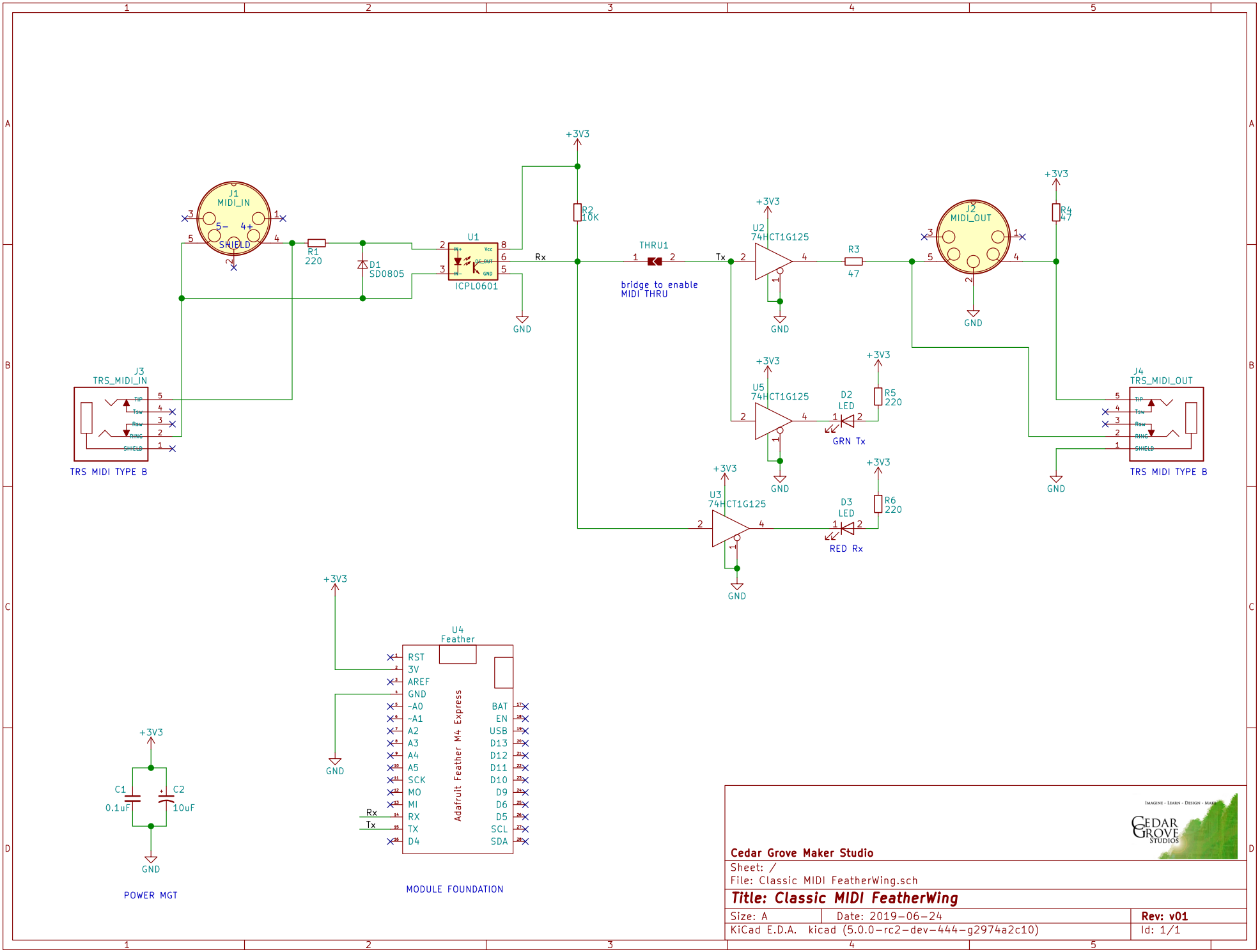

Cedar Grove Maker Studio

Sheet: /

File: Classic MIDI FeatherWing.sch

Title: Classic MIDI FeatherWing

Size: A	Date: 2019-06-24	**Rev: v01**
KiCad E.D.A. kicad (5.0.0-rc2-dev-444-g2974a2c10)		Id: 1/1