INA260

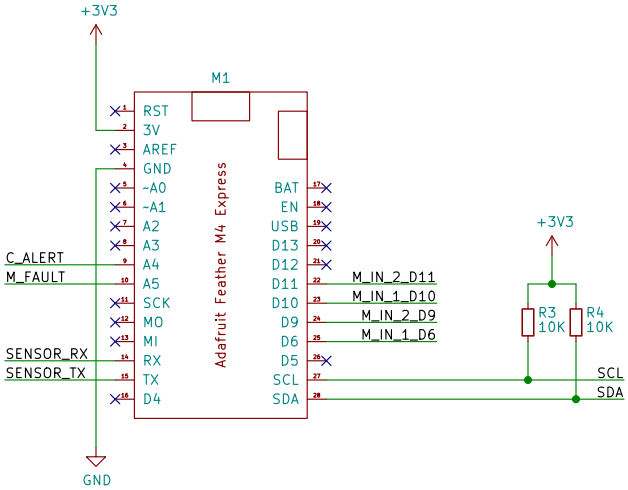

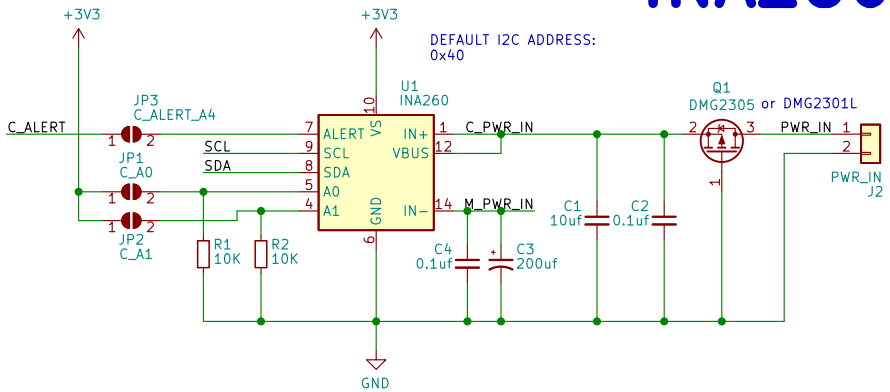

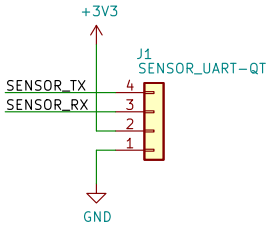

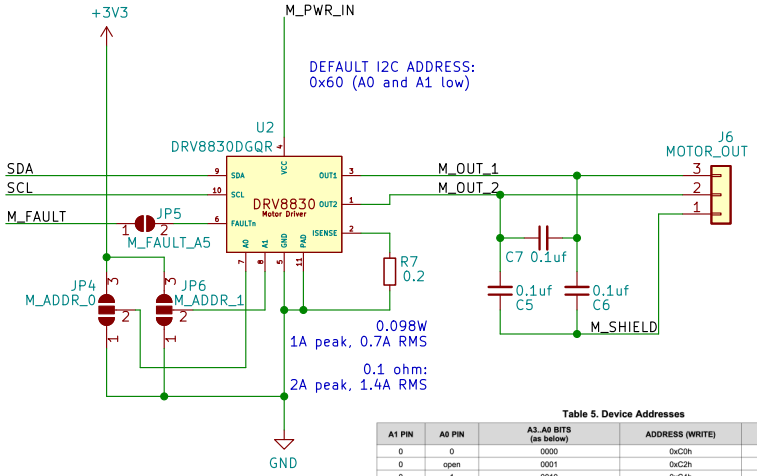

The DRV8830 datasheet incorrectly lists the base I2C address as 0xC0. The datasheet includes the I2C frame start bit in the address.

Table 5. Device Addresses

A1 PIN	A0 PIN	A3..A0 BITS (as below)	ADDRESS (WRITE)	ADDRESS (READ)
0	0	0000	0xC0h	0xC1h
0	open	0001	0xC2h	0xC3h
0	1	0010	0xC4h	0xC5h
open	0	0011	0xC6h	0xC7h
open	open	0100	0xC8h	0xC9h
open	1	0101	0xCAh	0xCBh
1	0	0110	0xCCh	0xCDh
1	open	0111	0xCEh	0xCFh
1	1	1000	0xD0h	0xD1h

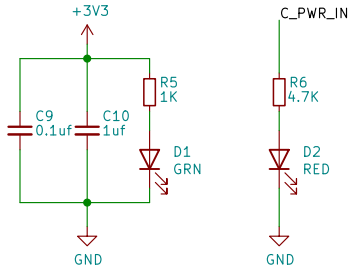

Cedar Grove Studios

Sheet: /

File: Motor_Tester_DRV8830_Wing.kicad_sch

Title: Motor_Tester_DRV8830_FeatherWing / INA260

Size: USLetter	Date: 2021-08-29	**Rev: v01**
KiCad E.D.A. kicad (6.0.0-0)		Id: 1/1