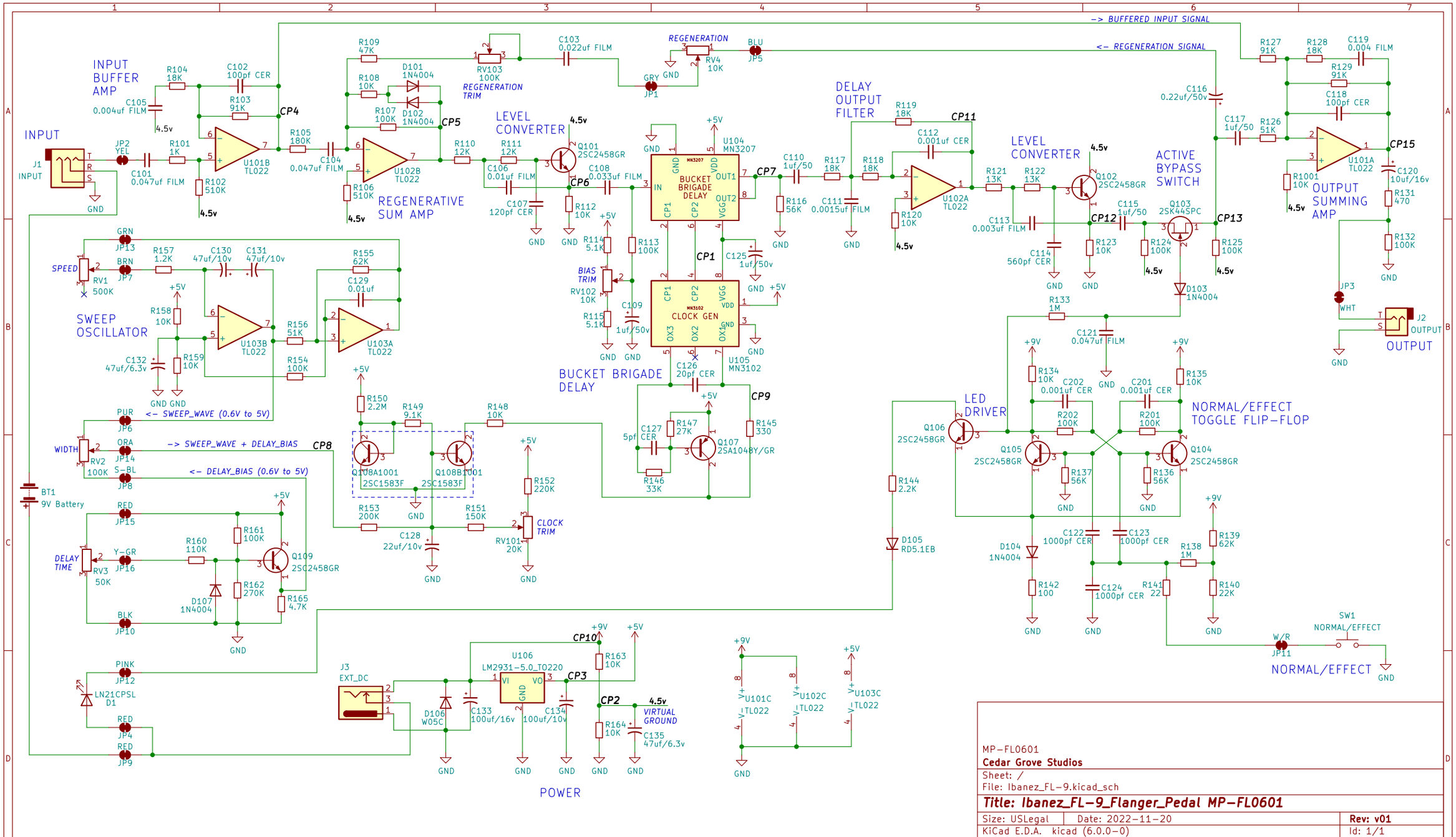
INPUT
J1
INPUT
INPUT BUFFER AMP
U101B TL022
REGENERATIVE SUM AMP
U102B TL022
REGENERATION TRIM
RV103 100K
REGENERATION
RV4 10K
LEVEL CONVERTER
Q101 2SC2458GR
BUCKET BRIGADE DELAY
U104 MN3207
CLOCK GEN
U105 MN3102
BIAS TRIM
RV102 10K
DELAY OUTPUT FILTER
U102A TL022
LEVEL CONVERTER
Q102 2SC2458GR
ACTIVE BYPASS SWITCH
Q103 2SK44SPC
OUTPUT SUMMING AMP
U101A TL022
OUTPUT
J2
OUTPUT
-> BUFFERED INPUT SIGNAL
<- REGENERATION SIGNAL
SPEED
RV1 500K
SWEEP OSCILLATOR
U103B TL022
U103A TL022
<- SWEEP_WAVE (0.6V to 5V)
-> SWEEP_WAVE + DELAY_BIAS
<- DELAY_BIAS (0.6V to 5V)
WIDTH
RV2 100K
BT1
9V Battery
DELAY TIME
RV3 50K
Q109 2SC2458GR
Q108A1001 2SC1583F
Q108B1001 2SC1583F
CLOCK TRIM
RV101 20K
Q107 2SA1048Y/GR
LED DRIVER
Q106 2SC2458GR
Q105 2SC2458GR
Q104 2SC2458GR
NORMAL/EFFECT TOGGLE FLIP-FLOP
D105 RD5.1EB
D104 1N4004
NORMAL/EFFECT
SW1 NORMAL/EFFECT
J3 EXT_DC
U106 LM2931-5.0_TO220
D106 W05C
LN21CPSL D1
VIRTUAL GROUND
POWER
U101C TL022
U102C TL022
U103C TL022
MP-FL0601
Cedar Grove Studios
Sheet: /
File: Ibanez_FL-9.kicad_sch
Title: Ibanez_FL-9_Flanger_Pedal MP-FL0601
Size: USLegal
Date: 2022-11-20
Rev: v01
KiCad E.D.A. kicad (6.0.0-0)
Id: 1/1