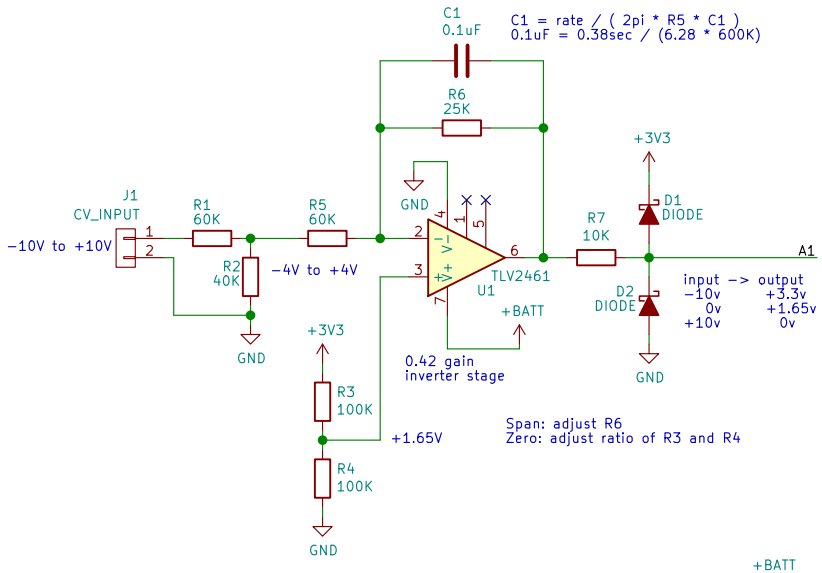

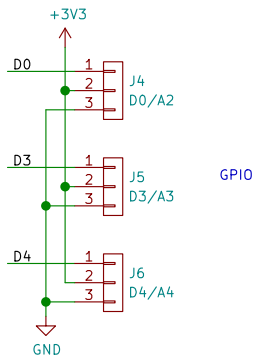

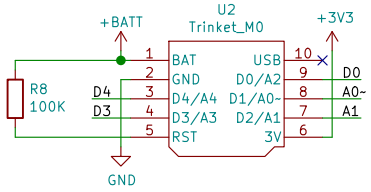

microcontroller

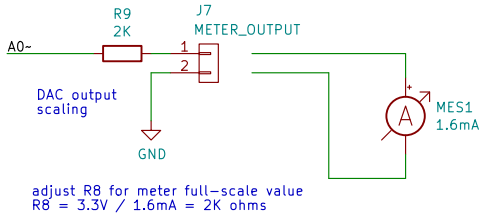

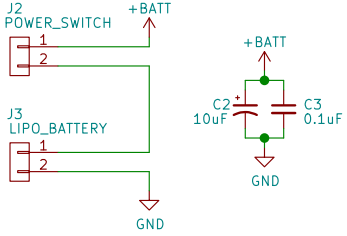

power management

Sheet: /
File: retro meter v02.sch

Title:

Size: A4	Date:	**Rev:**
KiCad E.D.A. kicad (5.0.0-rc2-dev-444-g2974a2c10)		Id: 1/1