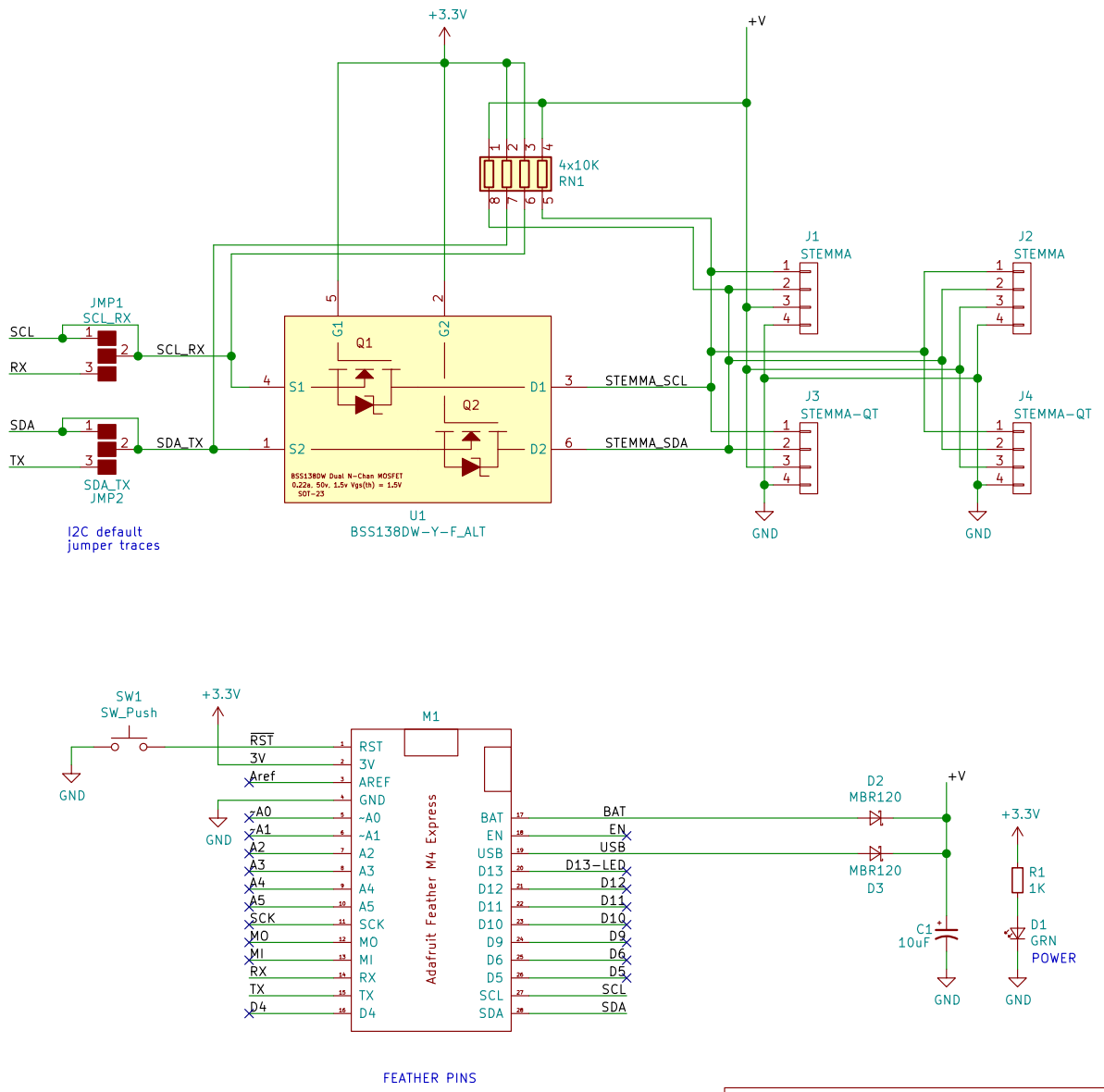

Cedar Grove Studios

Sheet: /

File: Stemma_Host_FeatherWing.sch

Title: Stemma_Host_FeatherWing

Size: USLetter	Date: 2019-11-25	Rev: v01
KiCad E.D.A. kicad (5.0.0-rc2-dev-444-g2974a2c10)		Id: 1/1