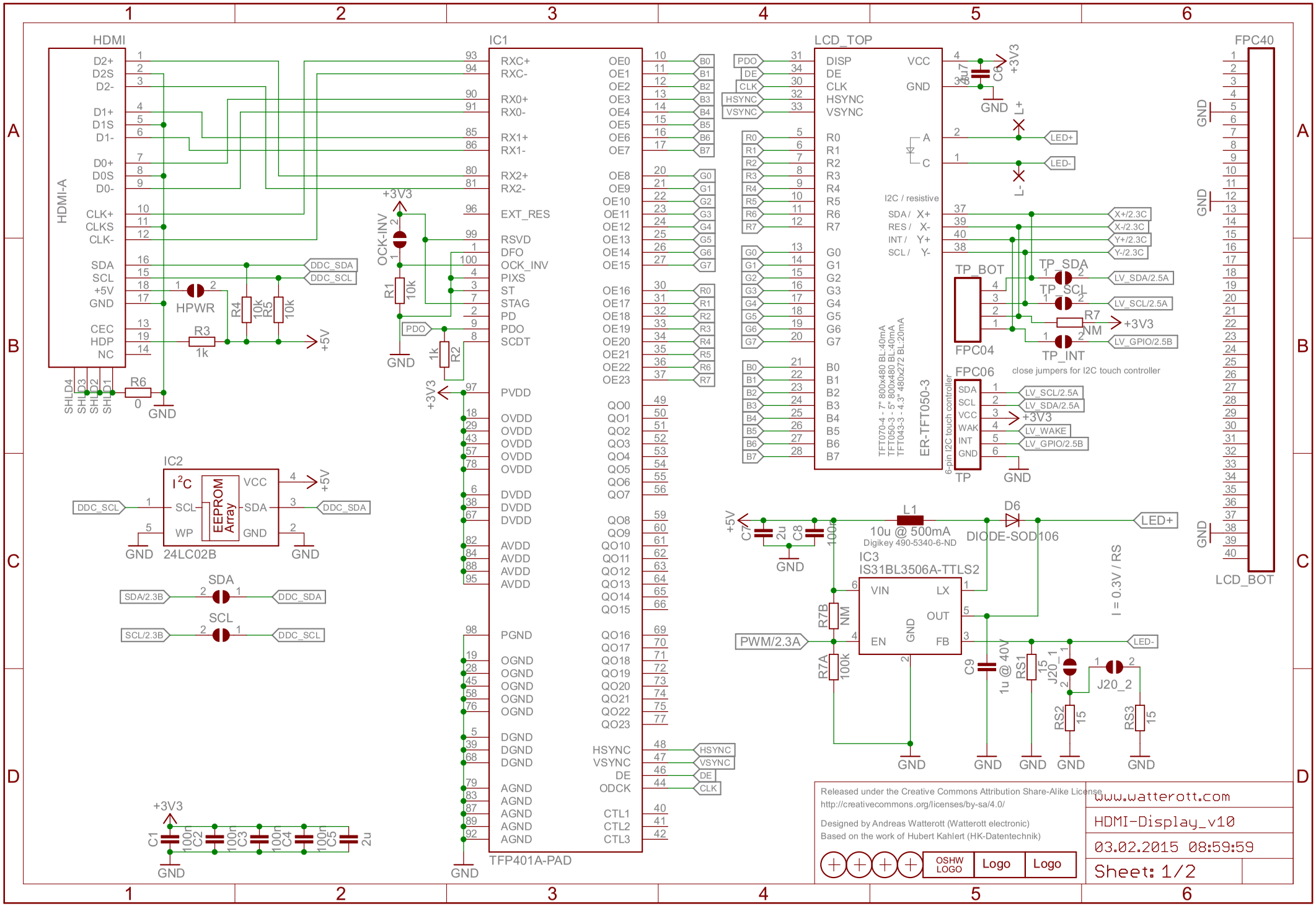
HDMI
HDMI-A
D2+
D2S
D2-
D1+
D1S
D1-
D0+
D0S
D0-
CLK+
CLKS
CLK-
SDA
SCL
+5V
GND
CEC
HDP
NC
SHLD4
SHLD3
SHLD2
SHLD1
HPWR
R3
1k
R4
10k
R5
10k
R6
0
IC1
TFP401A-PAD
RXC+
RXC-
RX0+
RX0-
RX1+
RX1-
RX2+
RX2-
EXT_RES
RSVD
DFO
OCK_INV
PIXS
ST
STAG
PD
PDO
SCDT
PVDD
OVDD
DVDD
AVDD
PGND
OGND
DGND
AGND
OE0
OE1
OE2
OE3
OE4
OE5
OE6
OE7
OE8
OE9
OE10
OE11
OE12
OE13
OE14
OE15
OE16
OE17
OE18
OE19
OE20
OE21
OE22
OE23
QO0
QO1
QO2
QO3
QO4
QO5
QO6
QO7
QO8
QO9
QO10
QO11
QO12
QO13
QO14
QO15
QO16
QO17
QO18
QO19
QO20
QO21
QO22
QO23
HSYNC
VSYNC
DE
ODCK
CTL1
CTL2
CTL3
OCK-INV
R1
10k
R2
1k
+3V3
GND
IC2
24LC02B
I²C
EEPROM Array
VCC
SCL
SDA
WP
GND
DDC_SCL
DDC_SDA
SDA
SCL
SDA/2.3B
SCL/2.3B
C1
100n
C2
100n
C3
100n
C4
100n
C5
2u
LCD_TOP
ER-TFT050-3
TFT070-4 - 7" 800x480 BL:40mA
TFT050-3 - 5" 800x480 BL:40mA
TFT043-3 - 4.3" 480x272 BL:20mA
DISP
DE
CLK
HSYNC
VSYNC
VCC
GND
R0
R1
R2
R3
R4
R5
R6
R7
G0
G1
G2
G3
G4
G5
G6
G7
B0
B1
B2
B3
B4
B5
B6
B7
PDO
C6
4u7
LED+
LED-
L+
L-
I2C / resistive
SDA / X+
RES / X-
INT / Y+
SCL / Y-
X+/2.3C
X-/2.3C
Y+/2.3C
Y-/2.3C
TP_BOT
FPC04
TP_SDA
TP_SCL
TP_INT
LV_SDA/2.5A
LV_SCL/2.5A
LV_GPIO/2.5B
R7
NM
close jumpers for I2C touch controller
FPC06
6-pin I2C touch controller
SDA
SCL
VCC
WAK
INT
GND
LV_WAKE
TP
FPC40
LCD_BOT
L1
10u @ 500mA
Digikey 490-5340-6-ND
D6
DIODE-SOD106
C7
2u
C8
100n
IC3
IS31BL3506A-TTLS2
VIN
LX
OUT
EN
GND
FB
PWM/2.3A
R7B
NM
R7A
100k
C9
1u @ 40V
RS1
15
RS2
15
RS3
15
J20_1
J20_2
I = 0.3V / RS
Released under the Creative Commons Attribution Share-Alike License
http://creativecommons.org/licenses/by-sa/4.0/
Designed by Andreas Watterott (Watterott electronic)
Based on the work of Hubert Kahlert (HK-Datentechnik)
OSHW LOGO
Logo
Logo
www.watterott.com
HDMI-Display_v10
03.02.2015 08:59:59
Sheet: 1/2

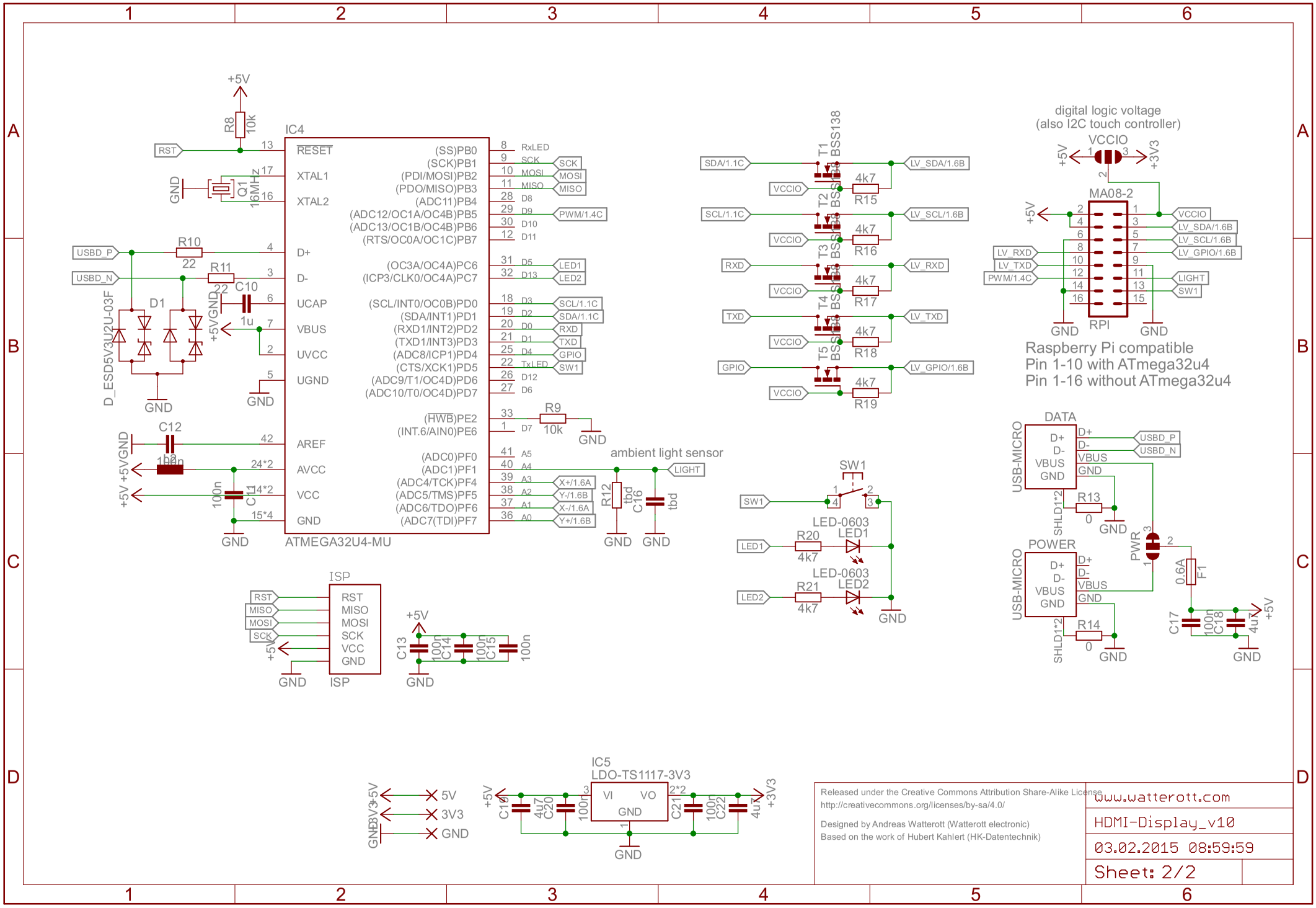

Released under the Creative Commons Attribution Share-Alike License
http://creativecommons.org/licenses/by-sa/4.0/

Designed by Andreas Watterott (Watterott electronic)
Based on the work of Hubert Kahlert (HK-Datentechnik)

www.watterott.com

HDMI-Display_v10

03.02.2015 08:59:59

Sheet: 2/2

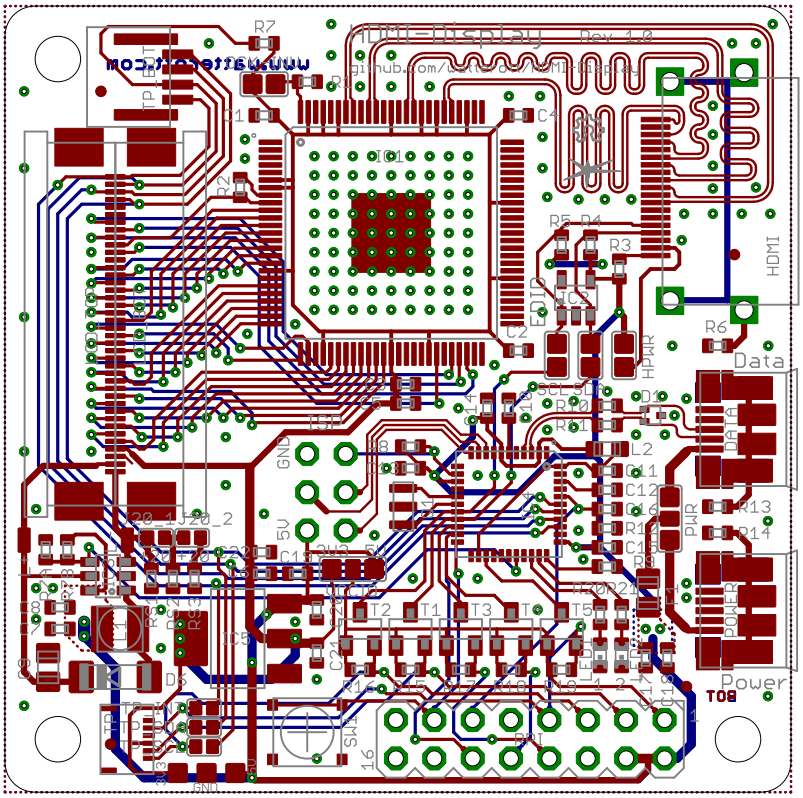
HDMI-Display
Rev 1.0
HDMI1
Data
Power
TOP
GND
5V
IC1
IC2
IC3
IC4
IC5
IC6
IC7
IC8
IC9
IC10
IC11
IC12
IC13
IC14
IC15
IC16
IC17
IC18
IC19
IC20
IC21
IC22
IC23
IC24
IC25
IC26
IC27
IC28
IC29
IC30
IC31
IC32
IC33
IC34
IC35
IC36
IC37
IC38
IC39
IC40
IC41
IC42
IC43
IC44
IC45
IC46
IC47
IC48
IC49
IC50
IC51
IC52
IC53
IC54
IC55
IC56
IC57
IC58
IC59
IC60
IC61
IC62
IC63
IC64
IC65
IC66
IC67
IC68
IC69
IC70
IC71
IC72
IC73
IC74
IC75
IC76
IC77
IC78
IC79
IC80
IC81
IC82
IC83
IC84
IC85
IC86
IC87
IC88
IC89
IC90
IC91
IC92
IC93
IC94
IC95
IC96
IC97
IC98
IC99
IC100
IC101
IC102
IC103
IC104
IC105
IC106
IC107
IC108
IC109
IC110
IC111
IC112
IC113
IC114
IC115
IC116
IC117
IC118
IC119
IC120
IC121
IC122
IC123
IC124
IC125
IC126
IC127
IC128
IC129
IC130
IC131
IC132
IC133
IC134
IC135
IC136
IC137
IC138
IC139
IC140
IC141
IC142
IC143
IC144
IC145
IC146
IC147
IC148
IC149
IC150
IC151
IC152
IC153
IC154
IC155
IC156
IC157
IC158
IC159
IC160
IC161
IC162
IC163
IC164
IC165
IC166
IC167
IC168
IC169
IC170
IC171
IC172
IC173
IC174
IC175
IC176
IC177
IC178
IC179
IC180
IC181
IC182
IC183
IC184
IC185
IC186
IC187
IC188
IC189
IC190
IC191
IC192
IC193
IC194
IC195
IC196
IC197
IC198
IC199
IC200
IC201
IC202
IC203
IC204
IC205
IC206
IC207
IC208
IC209
IC210
IC211
IC212
IC213
IC214
IC215
IC216
IC217
IC218
IC219
IC220
IC221
IC222
IC223
IC224
IC225
IC226
IC227
IC228
IC229
IC230
IC231
IC232
IC233
IC234
IC235
IC236
IC237
IC238
IC239
IC240
IC241
IC242
IC243
IC244
IC245
IC246
IC247
IC248
IC249
IC250
IC251
IC252
IC253
IC254
IC255
IC256
IC257
IC258
IC259
IC260
IC261
IC262
IC263
IC264
IC265
IC266
IC267
IC268
IC269
IC270
IC271
IC272
IC273
IC274
IC275
IC276
IC277
IC278
IC279
IC280
IC281
IC282
IC283
IC284
IC285
IC286
IC287
IC288
IC289
IC290
IC291
IC292
IC293
IC294
IC295
IC296
IC297
IC298
IC299
IC300
IC301
IC302
IC303
IC304
IC305
IC306
IC307
IC308
IC309
IC310
IC311
IC312
IC313
IC314
IC315
IC316
IC317
IC318
IC319
IC320
IC321
IC322
IC323
IC324
IC325
IC326
IC327
IC328
IC329
IC330
IC331
IC332
IC333
IC334
IC335
IC336
IC337
IC338
IC339
IC340
IC341
IC342
IC343
IC344
IC345
IC346
IC347
IC348
IC349
IC350
IC351
IC352
IC353
IC354
IC355
IC356
IC357
IC358
IC359
IC360
IC361
IC362
IC363
IC364
IC365
IC366
IC367
IC368
IC369
IC370
IC371
IC372
IC373
IC374
IC375
IC376
IC377
IC378
IC379
IC380
IC381
IC382
IC383
IC384
IC385
IC386
IC387
IC388
IC389
IC390
IC391
IC392
IC393
IC394
IC395
IC396
IC397
IC398
IC399
IC400
IC401
IC402
IC403
IC404
IC405
IC406
IC407
IC408
IC409
IC410
IC411
IC412
IC413
IC414
IC415
IC416
IC417
IC418
IC419
IC420
IC421
IC422
IC423
IC424
IC425
IC426
IC427
IC428
IC429
IC430
IC431
IC432
IC433
IC434
IC435
IC436
IC437
IC438
IC439
IC440
IC441
IC442
IC443
IC444
IC445
IC446
IC447
IC448
IC449
IC450
IC451
IC452
IC453
IC454
IC455
IC456
IC457
IC458
IC459
IC460
IC461
IC462
IC463
IC464
IC465
IC466
IC467
IC468
IC469
IC470
IC471
IC472
IC473
IC474
IC475
IC476
IC477
IC478
IC479
IC480
IC481
IC482
IC483
IC484
IC485
IC486
IC487
IC488
IC489
IC490
IC491
IC492
IC493
IC494
IC495
IC496
IC497
IC498
IC499
IC500
IC501
IC502
IC503
IC504
IC505
IC506
IC507
IC508
IC509
IC510
IC511
IC512
IC513
IC514
IC515
IC516
IC517
IC518
IC519
IC520
IC521
IC522
IC523
IC524
IC525
IC526
IC527
IC528
IC529
IC530
IC531
IC532
IC533
IC534
IC535
IC536
IC537
IC538
IC539
IC540
IC541
IC542
IC543
IC544
IC545
IC546
IC547
IC548
IC549
IC550
IC551
IC552
IC553
IC554
IC555
IC556
IC557
IC558
IC559
IC560
IC561
IC562
IC563
IC564
IC565
IC566
IC567
IC568
IC569
IC570
IC571
IC572
IC573
IC574
IC575
IC576
IC577
IC578
IC579
IC580
IC581
IC582
IC583
IC584
IC585
IC586
IC587
IC588
IC589
IC590
IC591
IC592
IC593
IC594
IC595
IC596
IC597
IC598
IC599
IC600
IC601
IC602
IC603
IC604
IC605
IC606
IC607
IC608
IC609
IC610
IC611
IC612
IC613
IC614
IC615
IC616
IC617
IC618
IC619
IC620
IC621
IC622
IC623
IC624
IC625
IC626
IC627
IC628
IC629
IC630
IC631
IC632
IC633
IC634
IC635
IC636
IC637
IC638
IC639
IC640
IC641
IC642
IC643
IC644
IC645
IC646
IC647
IC648
IC649
IC650
IC651
IC652
IC653
IC654
IC655
IC656
IC657
IC658
IC659
IC660
IC661
IC662
IC663
IC664
IC665
IC666
IC667
IC668
IC669
IC670
IC671
IC672
IC673
IC674
IC675
IC676
IC677
IC678
IC679
IC680
IC681
IC682
IC683
IC684
IC685
IC686
IC687
IC688
IC689
IC690
IC691
IC692
IC693
IC694
IC695
IC696
IC697
IC698
IC699
IC700
IC701
IC702
IC703
IC704
IC705
IC706
IC707
IC708
IC709
IC710
IC711
IC712
IC713
IC714
IC715
IC716
IC717
IC718
IC719
IC720
IC721
IC722
IC723
IC724
IC725
IC726
IC727
IC728
IC729
IC730
IC731
IC732
IC733
IC734
IC735
IC736
IC737
IC738
IC739
IC740
IC741
IC742
IC743
IC744
IC745
IC746
IC747
IC748
IC749
IC750
IC751
IC752
IC753
IC754
IC755
IC756
IC757
IC758
IC759
IC760
IC761
IC762
IC763
IC764
IC765
IC766
IC767
IC768
IC769
IC770
IC771
IC772
IC773
IC774
IC775
IC776
IC777
IC778
IC779
IC780
IC781
IC782
IC783
IC784
IC785
IC786
IC787
IC788
IC789
IC790
IC791
IC792
IC793
IC794
IC795
IC796
IC797
IC798
IC799
IC800
IC801
IC802
IC803
IC804
IC805
IC806
IC807
IC808
IC809
IC810
IC811
IC812
IC813
IC814
IC815
IC816
IC817
IC818
IC819
IC820
IC821
IC822
IC823
IC824
IC825
IC826
IC827
IC828
IC829
IC830
IC831
IC832
IC833
IC834
IC835
IC836
IC837
IC838
IC839
IC840
IC841
IC842
IC843
IC844
IC845
IC846
IC847
IC848
IC849
IC850
IC851
IC852
IC853
IC854
IC855
IC856
IC857
IC858
IC859
IC860
IC861
IC862
IC863
IC864
IC865
IC866
IC867
IC868
IC869
IC870
IC871
IC872
IC873
IC874
IC875
IC876
IC877
IC878
IC879
IC880
IC881
IC882
IC883
IC884
IC885
IC886
IC887
IC888
IC889
IC890
IC891
IC892
IC893
IC894
IC895
IC896
IC897
IC898
IC899
IC900
IC901
IC902
IC903
IC904
IC905
IC906
IC907
IC908
IC909
IC910
IC911
IC912
IC913
IC914
IC915
IC916
IC917
IC918
IC919
IC920
IC921
IC922
IC923
IC924
IC925
IC926
IC927
IC928
IC929
IC930
IC931
IC932
IC933
IC934
IC935
IC936
IC937
IC938
IC939
IC940
IC941
IC942
IC943
IC944
IC945
IC946
IC947
IC948
IC949
IC950
IC951
IC952
IC953
IC954
IC955
IC956
IC957
IC958
IC959
IC960
IC961
IC962
IC963
IC964
IC965
IC966
IC967
IC968
IC969
IC970
IC971
IC972
IC973
IC974
IC975
IC976
IC977
IC978
IC979
IC980
IC981
IC982
IC983
IC984
IC985
IC986
IC987
IC988
IC989
IC990
IC991
IC992
IC993
IC994
IC995
IC996
IC997
IC998
IC999
IC1000

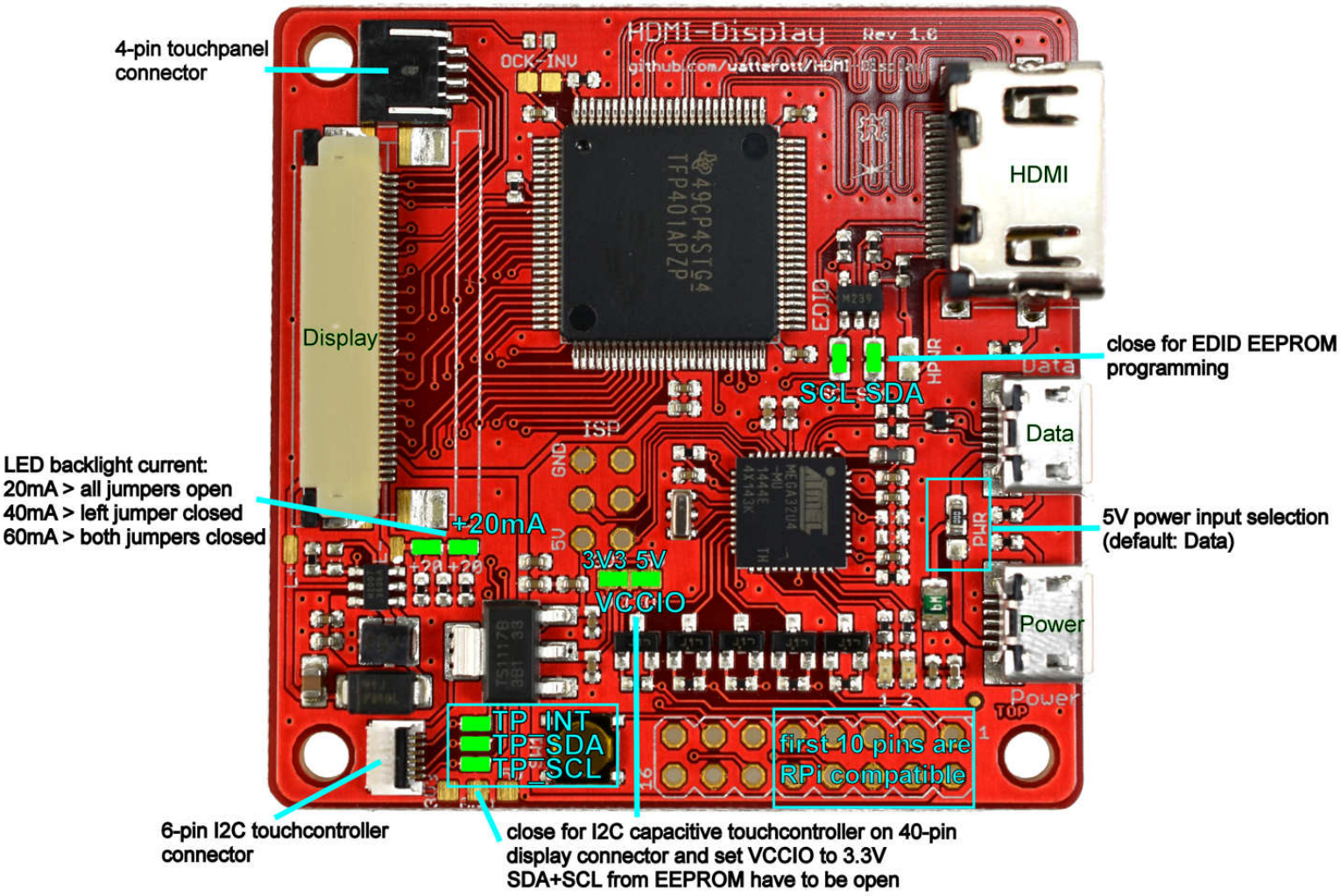
4-pin touchpanel connector
HDMI
Display
close for EDID EEPROM programming
SCL+SDA
Data
Data
LED backlight current:
20mA > all jumpers open
40mA > left jumper closed
60mA > both jumpers closed
+20mA
5V power input selection (default: Data)
3.V3 5V
VCCIO
Power
Power
TP_INT
TP_SDA
TP_SCL
first 10 pins are RPi compatible
6-pin I2C touchcontroller connector
close for I2C capacitive touchcontroller on 40-pin display connector and set VCCIO to 3.3V
SDA+SCL from EEPROM have to be open