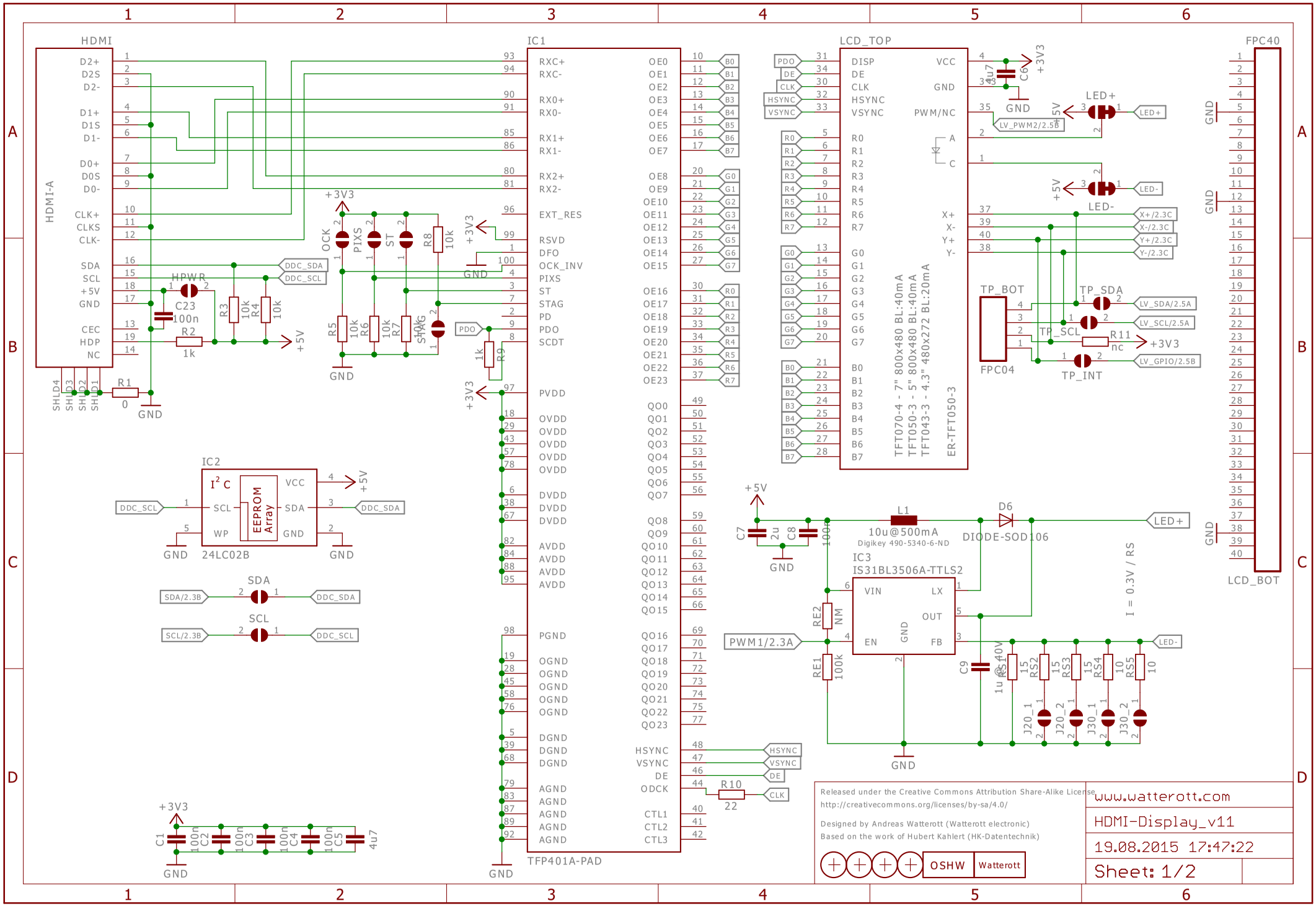
HDMI
HDMI-A
D2+
D2S
D2-
D1+
D1S
D1-
D0+
D0S
D0-
CLK+
CLKS
CLK-
SDA
SCL
+5V
GND
CEC
HDP
NC
SHLD4
SHLD3
SHLD2
SHLD1
R1
0
HPWR
C23
100n
R2
1k
R3
10k
R4
10k
DDC_SDA
DDC_SCL
IC1
TFP401A-PAD
RXC+
RXC-
RX0+
RX0-
RX1+
RX1-
RX2+
RX2-
EXT_RES
RSVD
DFO
OCK_INV
PIXS
ST
STAG
PD
PDO
SCDT
PVDD
OVDD
DVDD
AVDD
PGND
OGND
DGND
AGND
OE0
OE1
OE2
OE3
OE4
OE5
OE6
OE7
OE8
OE9
OE10
OE11
OE12
OE13
OE14
OE15
OE16
OE17
OE18
OE19
OE20
OE21
OE22
OE23
QO0
QO1
QO2
QO3
QO4
QO5
QO6
QO7
QO8
QO9
QO10
QO11
QO12
QO13
QO14
QO15
QO16
QO17
QO18
QO19
QO20
QO21
QO22
QO23
HSYNC
VSYNC
DE
ODCK
CTL1
CTL2
CTL3
B0
B1
B2
B3
B4
B5
B6
B7
G0
G1
G2
G3
G4
G5
G6
G7
R0
R1
R2
R3
R4
R5
R6
R7
OCK
PIXS
ST
STAG
R5
10k
R6
10k
R7
10k
R8
10k
R9
1k
R10
22
CLK
+3V3
GND
IC2
24LC02B
I²C
EEPROM Array
VCC
SCL
SDA
WP
GND
SDA/2.3B
SCL/2.3B
C1
100n
C2
100n
C3
100n
C4
100n
C5
4u7
LCD_TOP
DISP
DE
CLK
HSYNC
VSYNC
PWM/NC
VCC
GND
X+
X-
Y+
Y-
TFT070-4 - 7" 800x480 BL:40mA
TFT050-3 - 5" 800x480 BL:40mA
TFT043-3 - 4.3" 480x272 BL:20mA
ER-TFT050-3
C6
4u7
LV_PWM2/2.5B
LED+
LED-
X+/2.3C
X-/2.3C
Y+/2.3C
Y-/2.3C
TP_BOT
FPC04
TP_SDA
TP_SCL
TP_INT
R11
nc
LV_SDA/2.5A
LV_SCL/2.5A
LV_GPIO/2.5B
FPC40
LCD_BOT
C7
2u
C8
100
L1
10u@500mA
Digikey 490-5340-6-ND
D6
DIODE-SOD106
IC3
IS31BL3506A-TTLS2
VIN
LX
OUT
EN
GND
FB
PWM1/2.3A
RE2
NM
RE1
100K
C9
1u 6.3 40V
RS1
15
RS2
15
RS3
15
RS4
10
RS5
10
J20_1
J20_2
J30_1
J30_2
I = 0.3V / RS
Released under the Creative Commons Attribution Share-Alike License
http://creativecommons.org/licenses/by-sa/4.0/
Designed by Andreas Watterott (Watterott electronic)
Based on the work of Hubert Kahlert (HK-Datentechnik)
OSHW
Watterott
www.watterott.com
HDMI-Display_v11
19.08.2015 17:47:22
Sheet: 1/2

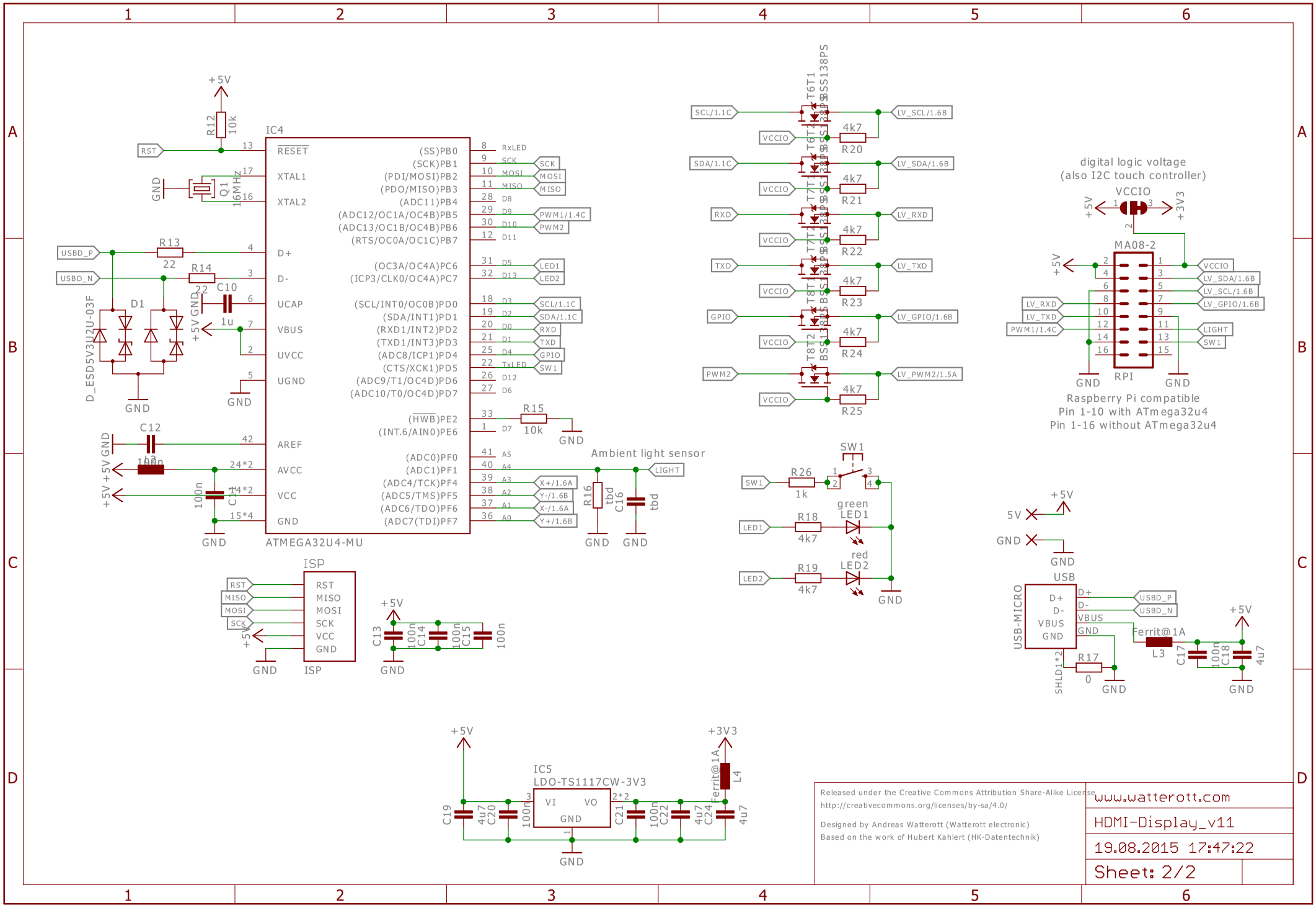

Released under the Creative Commons Attribution Share-Alike License
http://creativecommons.org/licenses/by-sa/4.0/

Designed by Andreas Watterott (Watterott electronic)
Based on the work of Hubert Kahlert (HK-Datentechnik)

www.watterott.com

HDMI-Display_v11

19.08.2015 17:47:22

Sheet: 2/2

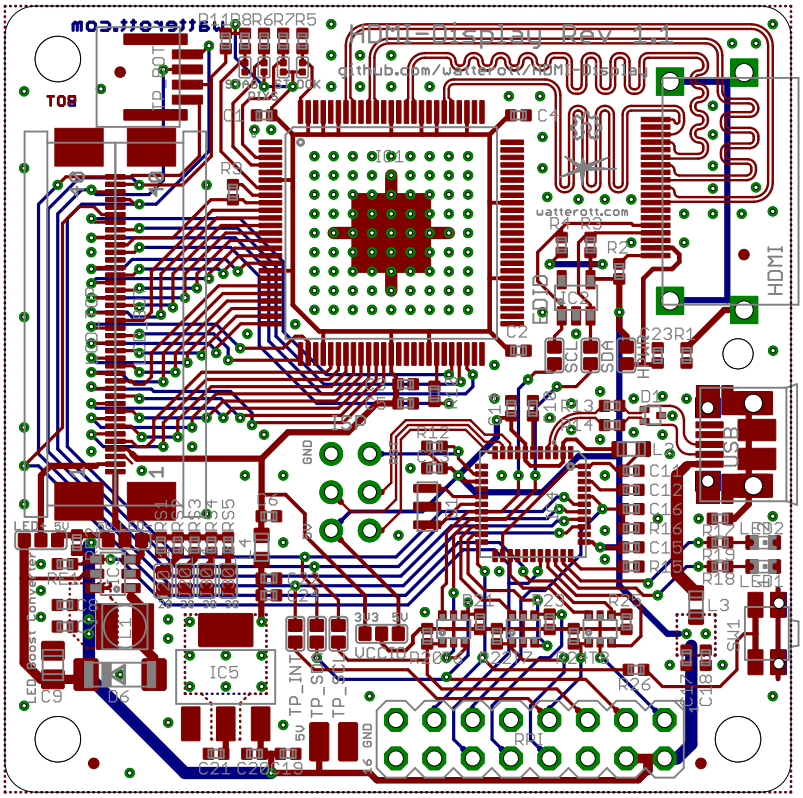
HDMI-Display Rev 1.1
watterott.com
TOP
HDMI
USB
IC1
IC5
RN1
GND
SCL
SDA
TP_INT
TP_SCL
TP_SDA
3V3
5V
LED
Boost Driver