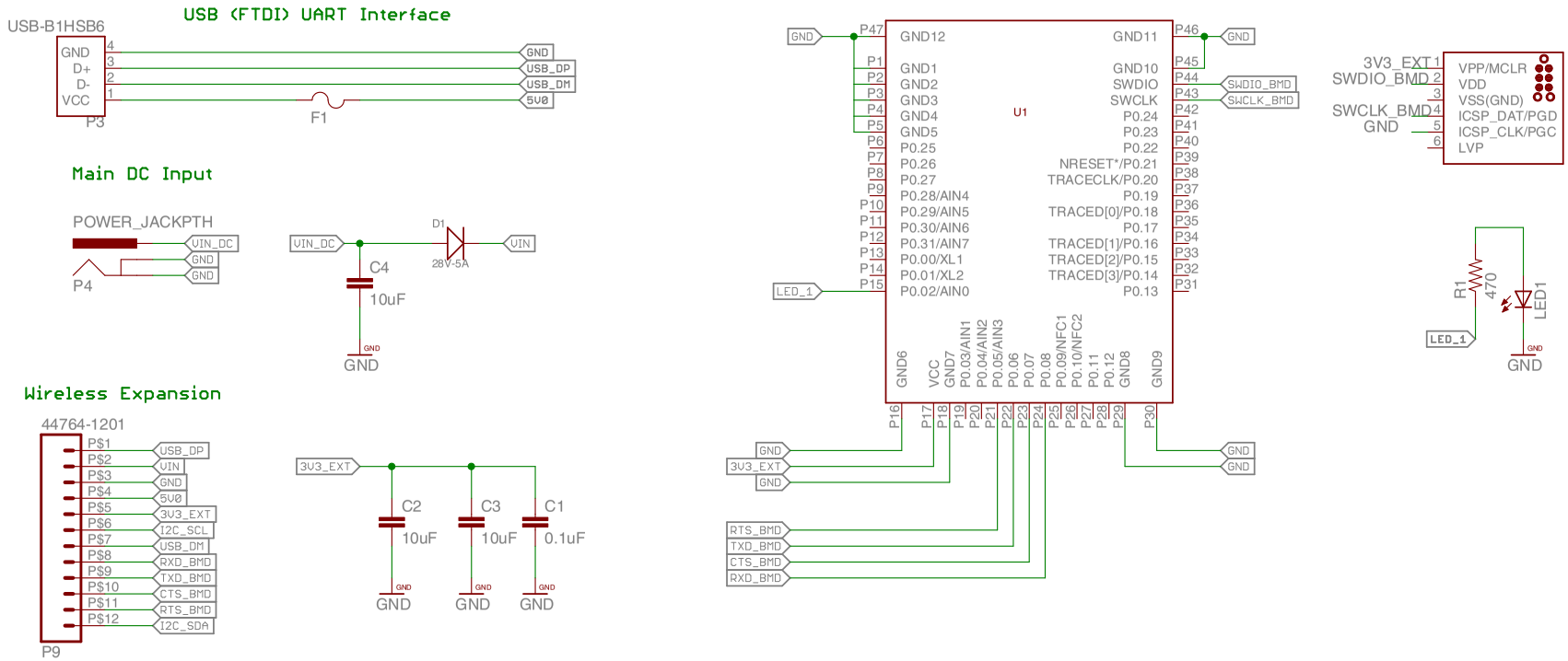

©Copyright 2016/2017 NSVR
All Rights Reserved
Confidential and Proprietary Information

NSVR - BLTE Board

TITLE: btle_board

Document Number:

REV:

Date: 9/27/2017 11:10:12 AM

Sheet: 1/1