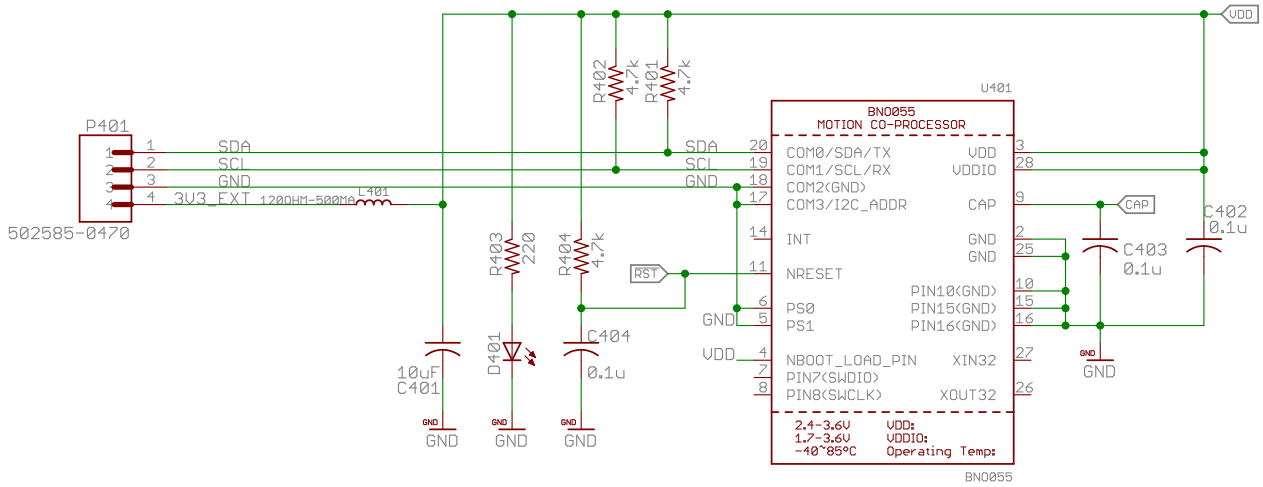

TITLE: imu_b_03_12_2018

Document Number:

REV:

Date: 3/12/2018 6:06:15 PM

Sheet: 1/1