10.018 Modelling Space and Systems

Week 5 Class 1

Double Integrals, Polar Coordinates and Triple Integrals

SINGAPORE UNIVERSITY OF TECHNOLOGY AND DESIGN

Restricted

Learning Outcomes / Prerequisites

At the end of the lesson, you should be able to:

- understand and perform double integrals in polar coordinates,
- extend techniques used in double integrals to triple integrals,
- understand and perform triple integrals in cylindrical and spherical coordinates.

Prerequisites:

- compute double integrals over general regions,
- recall definition of polar coordinates,
- apply integration techniques like integration by substitution.

Outline

1. Double Integrals
2. Polar Coordinates
3. Triple Integrals
4. Summary
5. Appendix: Some Applications

Activity 1 (10 minutes)

Set up a double integral to find the volume of the tetrahedron bounded by the planes $x = 0$, $y = 0$, $z = 0$ and $x + y + z = 1$. You don't have to evaluate it.

Hint 1: We want to find $\iint\limits_R f(x, y)\, dxdy$.

Hint 2: Sketch R to figure out what $\iint\limits_R$ are.

Hint 3: How should $f(x, y)$ look like?

Outline

1. Double Integrals
2. Polar Coordinates
3. Triple Integrals
4. Summary
5. Appendix: Some Applications

Polar Coordinates

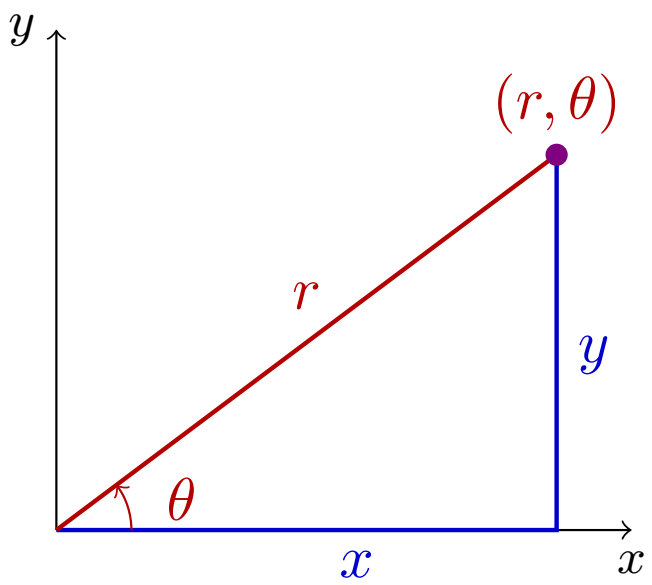

Recall that we can convert between Cartesian and polar coordinates:

$$\begin{cases} x &= r\cos(\theta), \\ y &= r\sin(\theta); \end{cases}$$

$$\begin{cases} r &= \sqrt{x^2+y^2}, \\ \theta &= \arctan\left(\dfrac{y}{x}\right) \quad (\text{if } x > 0). \end{cases}$$

To evaluate $\iint_R f(x,y)\,dA$, it is sometimes better to make a change of variables to polar coordinates, for instance when

- the region R is a disk or a sector,
- the function f contains terms like x^2+y^2.

Cartesian Coordinates

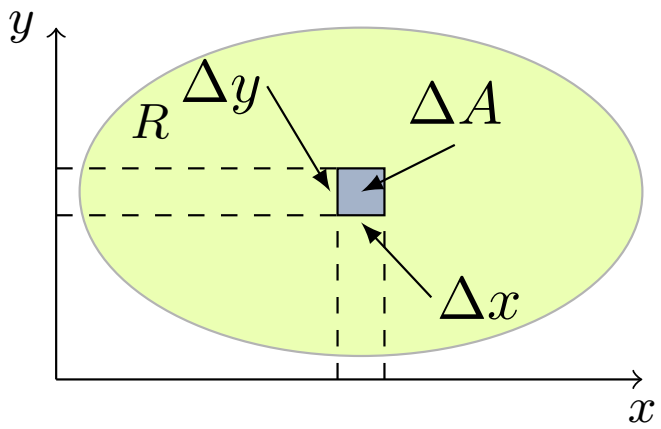

Recall the definition of a double integral $\iint_R f(x,y)\,dA$, we sum over the volume of many rectangular blocks where the base cross sections are small rectangles of area ΔA. In Cartesian coordinates, we have the finite area element $\Delta A = \Delta x \Delta y$.

In the limit $\Delta x \to 0$ and $\Delta y \to 0$, we get the area element $dA = dx\,dy$. Thus the double integral over the region R is $\iint_R f(x,y)\,dxdy$.

Polar Coordinates

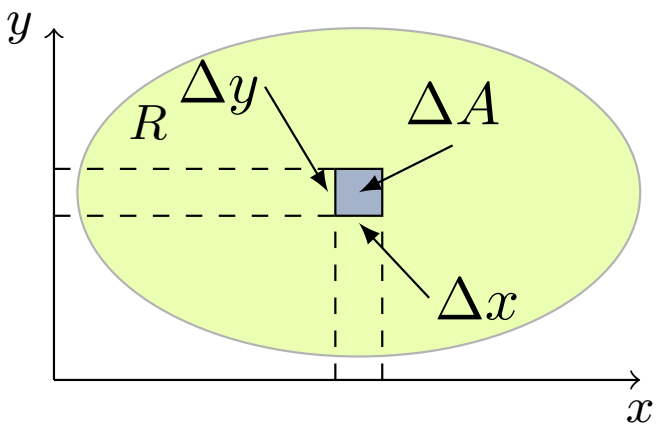

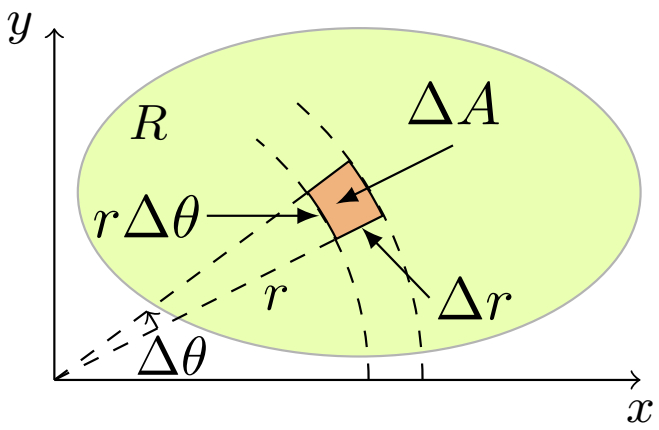

We wish to compute the double integral over the same region R using polar coordinates. Thus the base cross section of the blocks are shown in the figure to the right. The finite area element is given by $\Delta A = r\Delta r\Delta\theta$ (θ is in radians).

In the limit $\Delta r \to 0$ and $\Delta\theta \to 0$, we get the area element $dA = r\,dr\,d\theta$. The double integral over R in polar coordinates is

$$\iint_R f(x,y)\,dA = \iint_R f(r\cos(\theta),\, r\sin(\theta))\,r\,dr\,d\theta.$$

Polar Coordinates

Example:

Find the area of a circle of radius a using double integration.

Solution:

Let R be the circular region defined by $x^2 + y^2 \leq a^2$. We can find the area by setting f to be a **dimensionless** 1, i.e. $f = 1$. Thus the area is given by $\iint_R 1\, dA$.

$$\iint_R 1\, r\, dr d\theta = \int_0^{2\pi} \int_0^a r\, dr d\theta$$

$$= \int_0^{2\pi} \frac{1}{2} a^2\, d\theta = \pi a^2.$$

Remember to express the limits of integration in polar coordinates.

Activity 2 (15 minutes)

(a) Calculate the area of the region B shown on the right, using an iterated integral in polar coordinates.

(b) Set up the integral to compute the area of the regions $B + G$ shown on the right, using an iterated integral in polar coordinates.

(c) Set up the integral to calculate the area enclosed by the cardioid[a], described by the formula.

$$r = 1 - \sin(\theta).$$

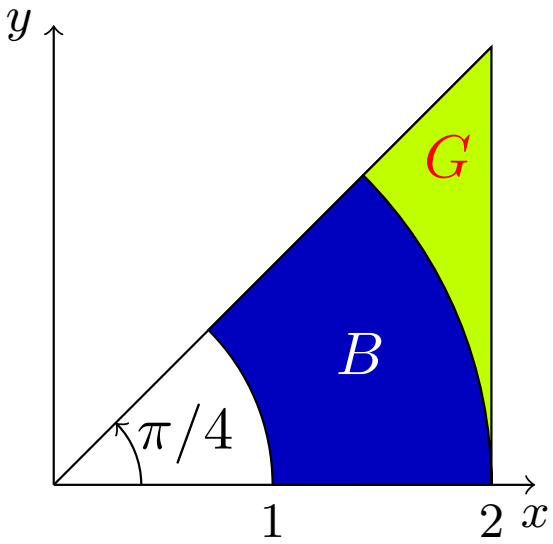

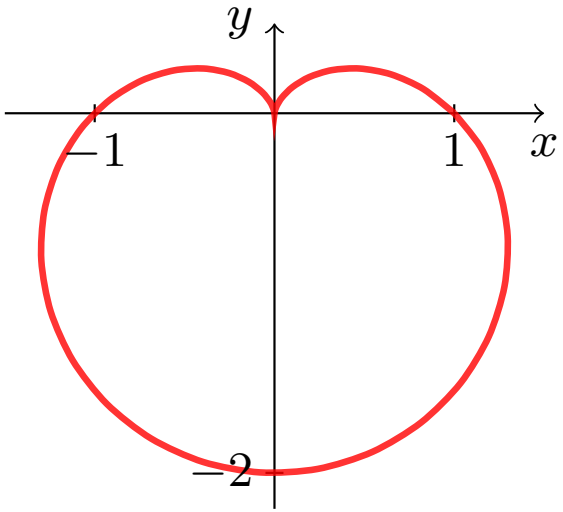

[a] It's called a *cardioid* since it vaguely resembles a heart.

Break

5 mins break

Please remember to do the mid-term course/teaching feedbacks.

Activity 3 (10 minutes)

The indefinite integral $\int e^{-x^2}\,dx$ cannot be expressed as a finite combination of elementary functions. However, it is possible to find the value of the definite integral $I = \int_{-\infty}^{\infty} e^{-x^2}\,dx$.

(a) Show that the double integral

$$\iint_{\mathbb{R}^2} e^{-x^2-y^2}\,dxdy = I^2.$$

(b) Convert the above integral to polar coordinates, and evaluate it. Hence, find the value of I.

Outline

1. Double Integrals
2. Polar Coordinates
3. Triple Integrals
4. Summary
5. Appendix: Some Applications

Riemann Sum

Without going into the details, we define the following.

Definition

The triple integral of a continuous function $f(x, y, z)$ over the solid region $R = [a, b] \times [c, d] \times [p, q]$ is a signed hypervolume given by

$$\iiint\limits_R f(x, y, z)\ dV = \lim_{\Delta x, \Delta y, \Delta z \to 0} \sum_{i,j,k} f(u_{ijk}, v_{ijk}, w_{ijk}) \Delta x \Delta y \Delta z$$

where $(u_{ijk}, v_{ijk}, w_{ijk})$ is some point in the $(i, j, k)^{\text{th}}$ sub-box.

In triple integral, we are summing over many small sub-boxes as shown.

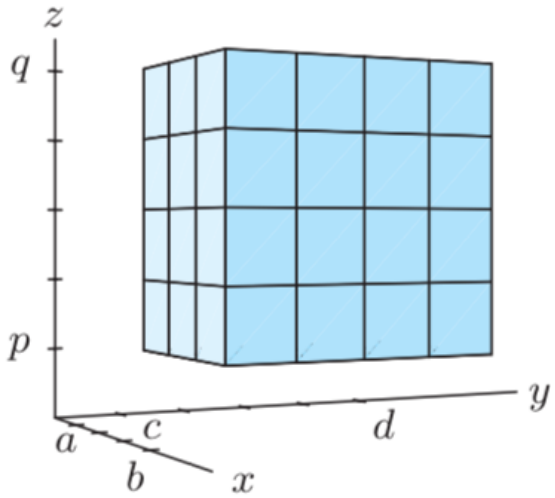

Iterated Integrals

The iterated integral for triple integrals can be written as

$$\int_p^q \int_c^d \int_a^b f(x, y, z)\, dxdydz.$$

Theorem: Fubini's Theorem

Let R be the solid rectangular box $[a, b] \times [c, d] \times [p, q]$. If $f(x, y, z)$ is continuous on R, then

$$\iiint\limits_R f(x, y, z)\, dV = \int_p^q \int_a^b \int_c^d f(x, y)\, dydxdz$$

$$= \int_p^q \int_c^d \int_a^b f(x, y)\, dxdydz = \text{etc.}$$

There are $3! = 6$ such iterated integrals.

Triple Integrals

We will not discuss triple integrals in general region.

Some examples of application of triple integrals are listed below. (More examples are listed in the Appendix.)

Example:

1. If $f(x, y, z)$ is the mass density, then $\iiint_S f(x, y, z)\, dV$ is the total mass of the solid S.
2. If $f(x, y, z)$ is the charge density, then $\iiint_S f(x, y, z)\, dV$ is the total charge of the solid S.
3. If $f(x, y, z) = 1$ and is dimensionless, then $\iiint_S 1\, dV$ is the volume of the solid S

Cylindrical Coordinates

Cylindrical coordinates are based on polar coordinates.

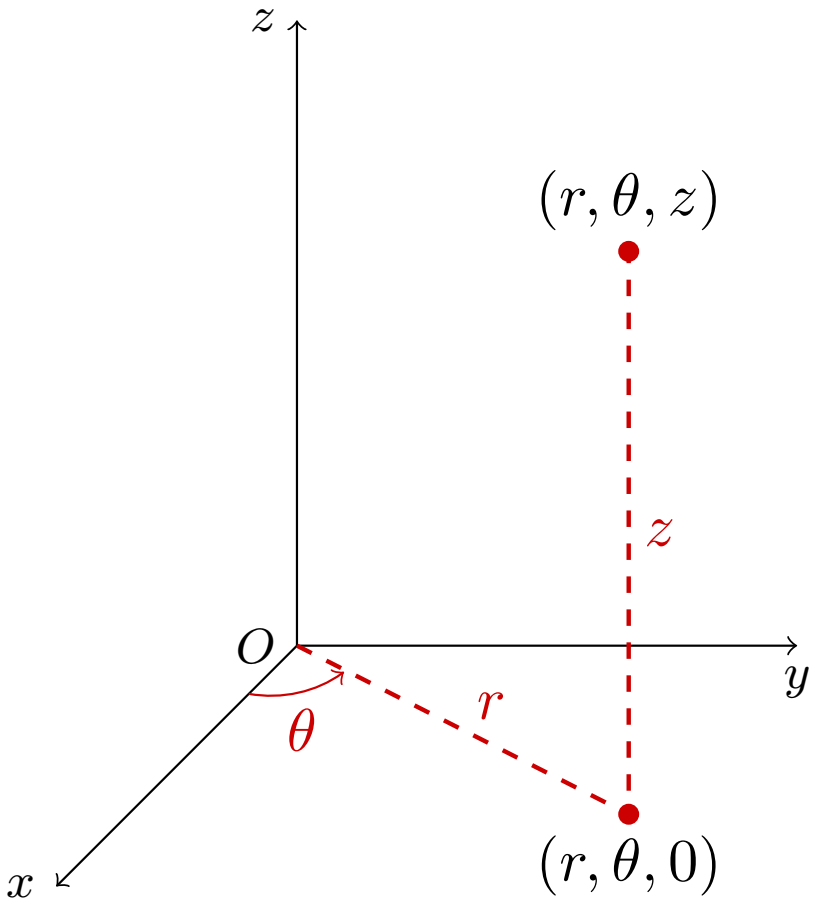

From cylindrical to Cartesian:

$$x = r\cos\theta,$$
$$y = r\sin\theta,$$
$$z = z.$$

From Cartesian to cylindrical:

$$r = \sqrt{x^2 + y^2},$$
$$\theta = \arctan\frac{y}{x} \text{ (if } x > 0),$$
$$z = z.$$

Cylindrical Coordinates

The fundamental surfaces in cylindrical coordinates are

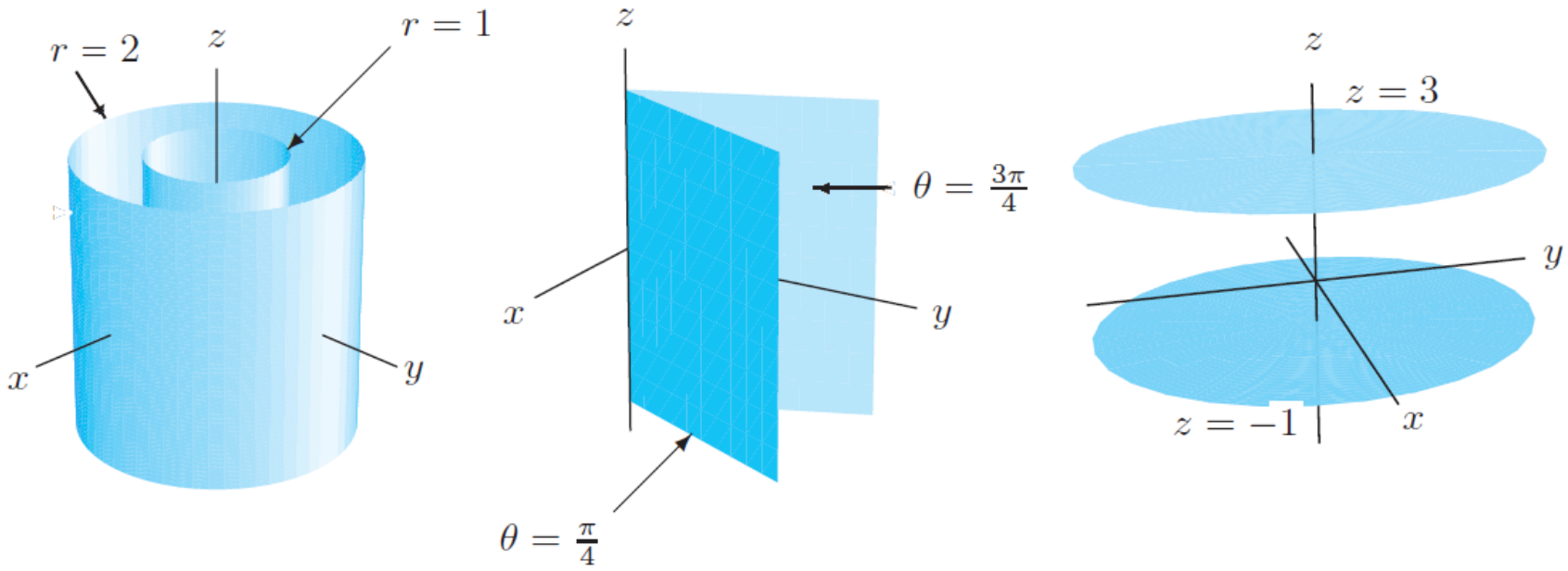

Cylindrical Coordinates

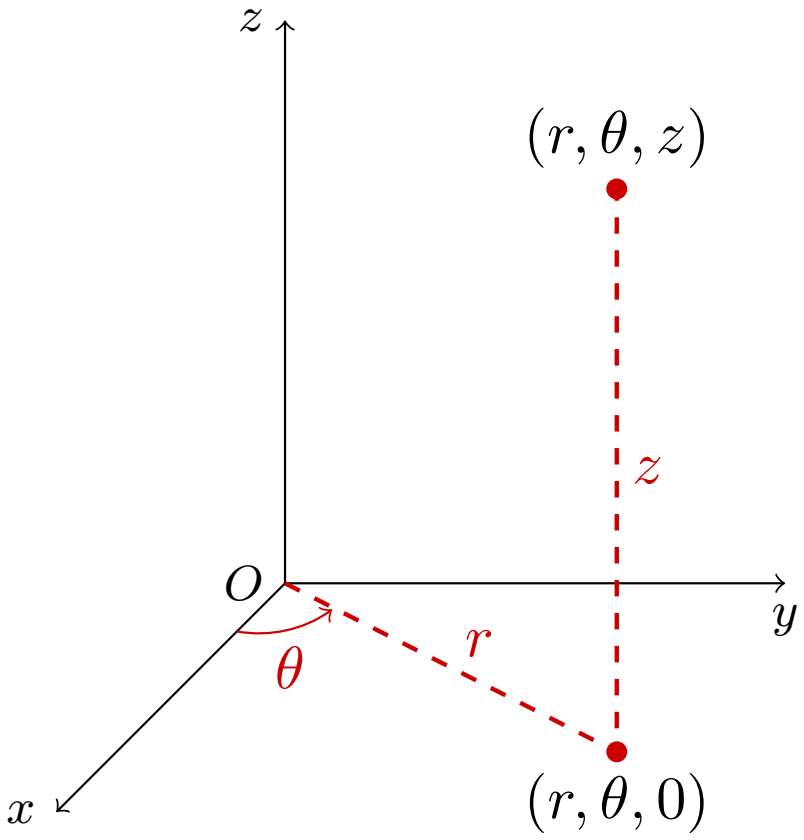

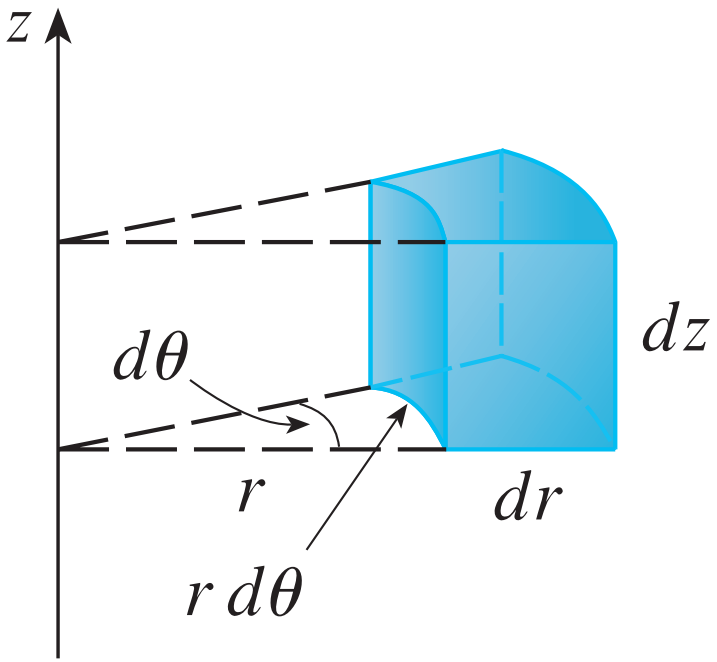

The volume element for cylindrical coordinates is

$$dV = r\,dr\,d\theta\,dz.$$

Spherical Coordinates

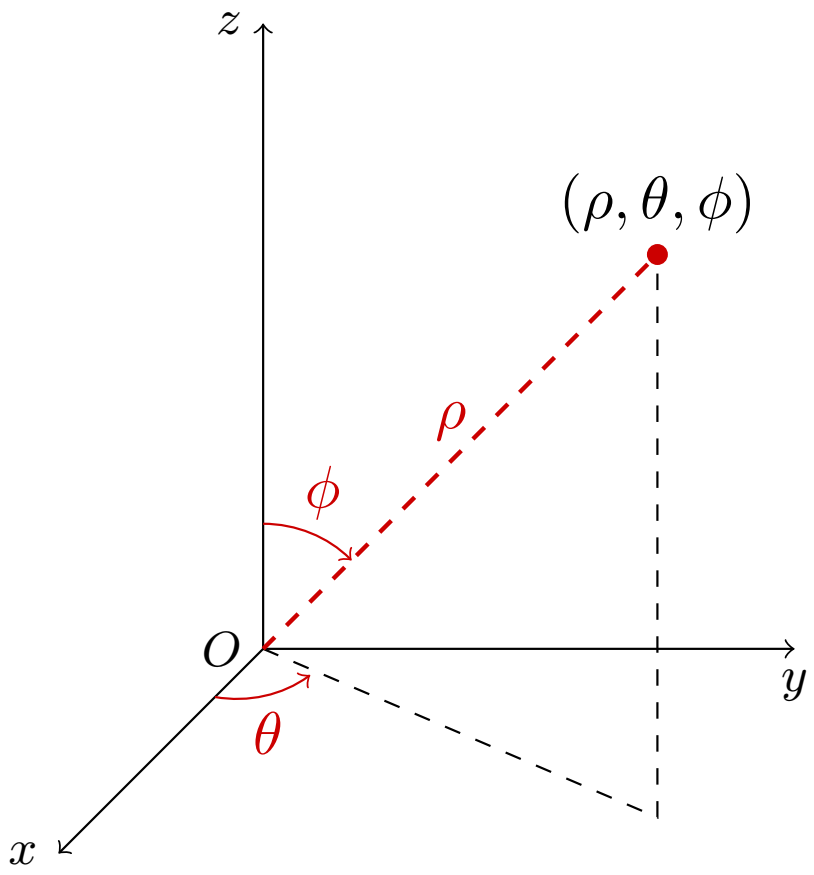

Note: $0 \le \theta < 2\pi, \;\; 0 \le \phi \le \pi$.

From spherical to Cartesian:

$$x = \rho \sin\phi \cos\theta,$$
$$y = \rho \sin\phi \sin\theta,$$
$$z = \rho \cos\phi.$$

From Cartesian to spherical:

$$\rho = \sqrt{x^2 + y^2 + z^2},$$
$$\theta = \arctan \frac{y}{x} \text{ (if } x > 0),$$
$$\phi = \arctan \frac{\sqrt{x^2 + y^2}}{z}.$$

Spherical Coordinates

The fundamental surfaces in spherical coordinates:

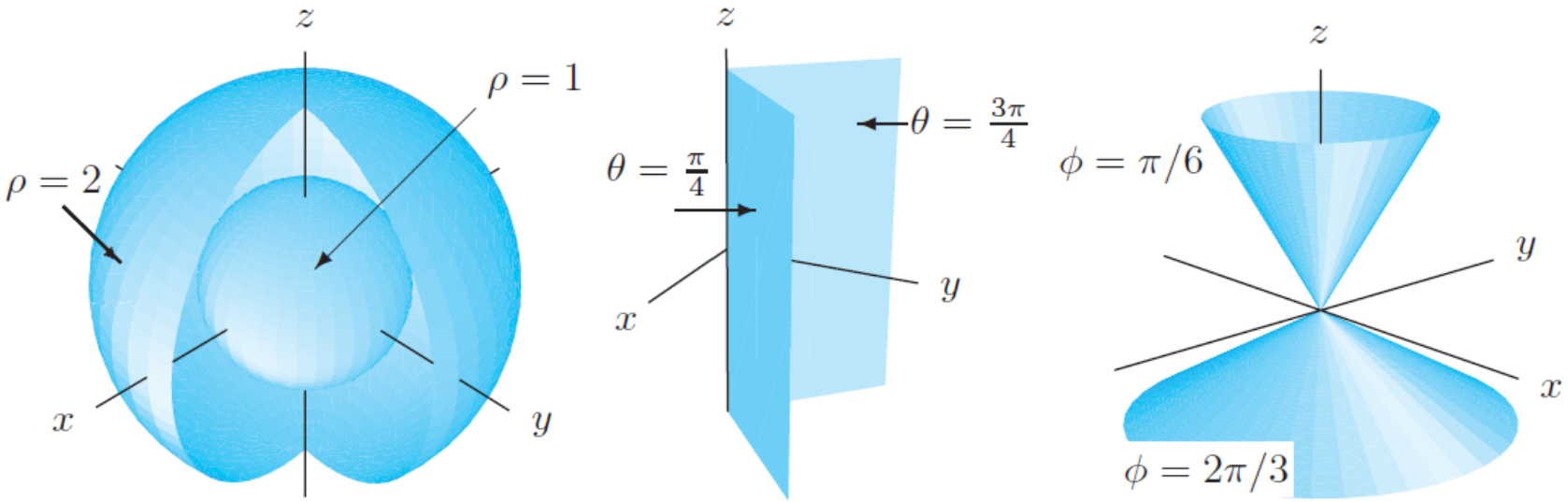

Spherical Coordinates

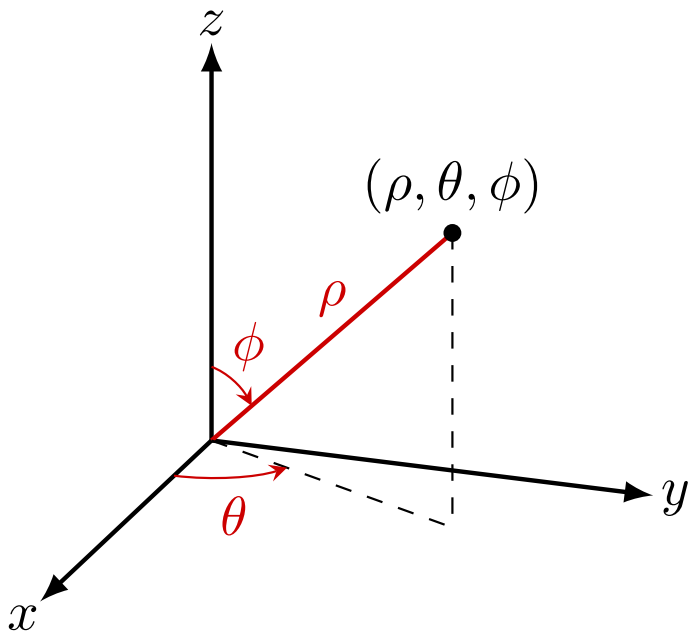

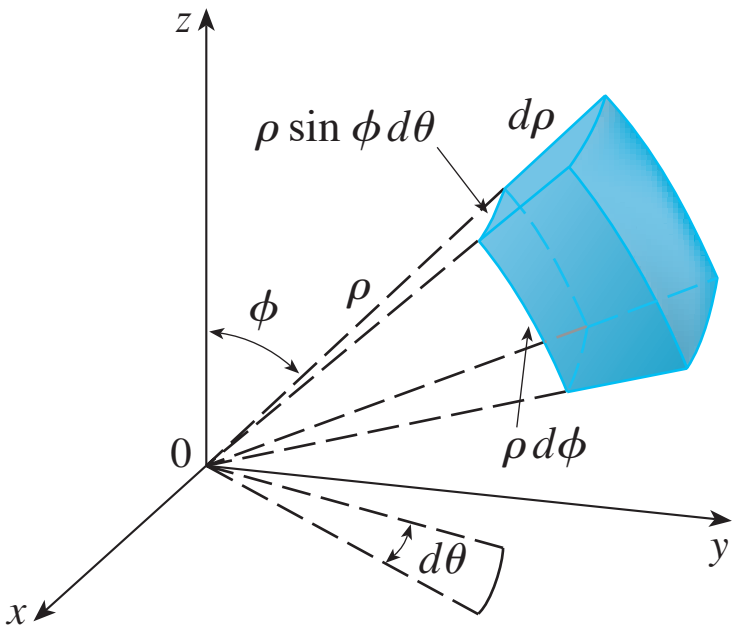

The volume element for spherical coordinates is

$$dV = \rho^2 \sin \phi \, d\rho \, d\theta \, d\phi.$$

Activity 4 (10 minutes)

(a) Set up the integral (do not evaluate it) to find the volume of a sphere with radius R, using a triple integral and spherical coordinates.

(b) Set up the integral (do not evaluate it) to find the volume of the slice of cheese shown in the picture below, using a triple integral and cylindrical coordinates.

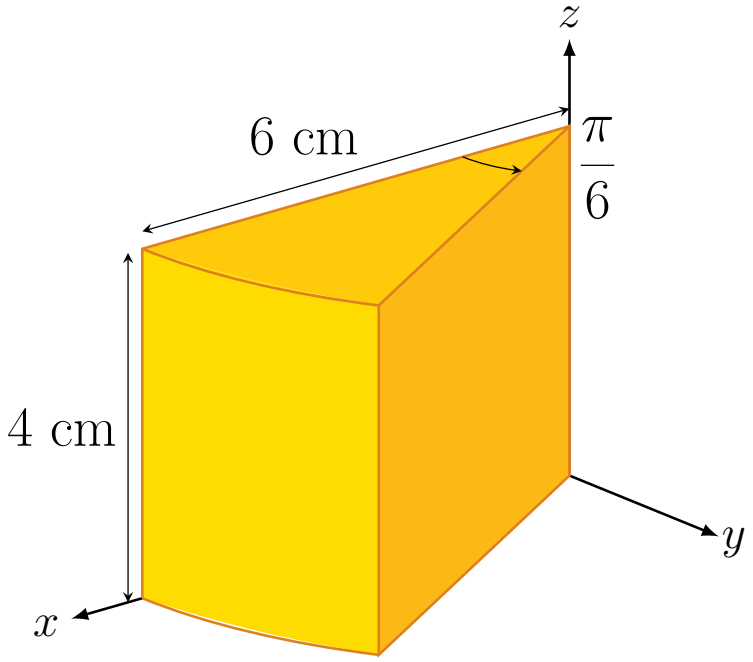

Restricted

Outline

1. Double Integrals
2. Polar Coordinates
3. Triple Integrals
4. Summary
5. Appendix: Some Applications

Summary

We have covered:

- more examples on double integrals,
- polar coordinates,
- triple integrals
- cylindrical coordinates,
- spherical coordinates.

References:

Textbook	Section
Hughes-Hallet	16.3 - 16.5
Simmons	20.4 - 20.7

You may try the exercises therein.

Online Resources

Click on each box to access the video

polar* cylindrical* spherical*

triple(1) triple(2) triple(3)

*The parts on the gradient in polar, cylindrical and spherical coordinates are for your information.

Outline

1. Double Integrals
2. Polar Coordinates
3. Triple Integrals
4. Summary
5. Appendix: Some Applications

Some Applications

We list down more applications of triple integrals.

1. If $f(x, y, z)$ is the mass density, then $\iiint_S x f(x, y, z)\, dV$ is the total moment of the solid S about the yz-plane.
2. If $f(x, y, z)$ is the mass density, then $\dfrac{1}{M}\iiint_S y f(x, y, z)\, dV$ is the y coordinate of the center of mass of the solid S. $M = \iiint_S f(x, y, z)\, dV$ is the total mass of the S.
3. If $f(x, y, z)$ is the mass density, then $\iiint_S (x^2 + y^2) f(x, y, z)\, dV$ is the moment of inertia of the solid S about the z axis.
4. If $f(x, y, z)$ is the probability density function, then $\iiint_S f(x, y, z)\, dV$ is the probability for a point (x, y, z) that lies within the region S.