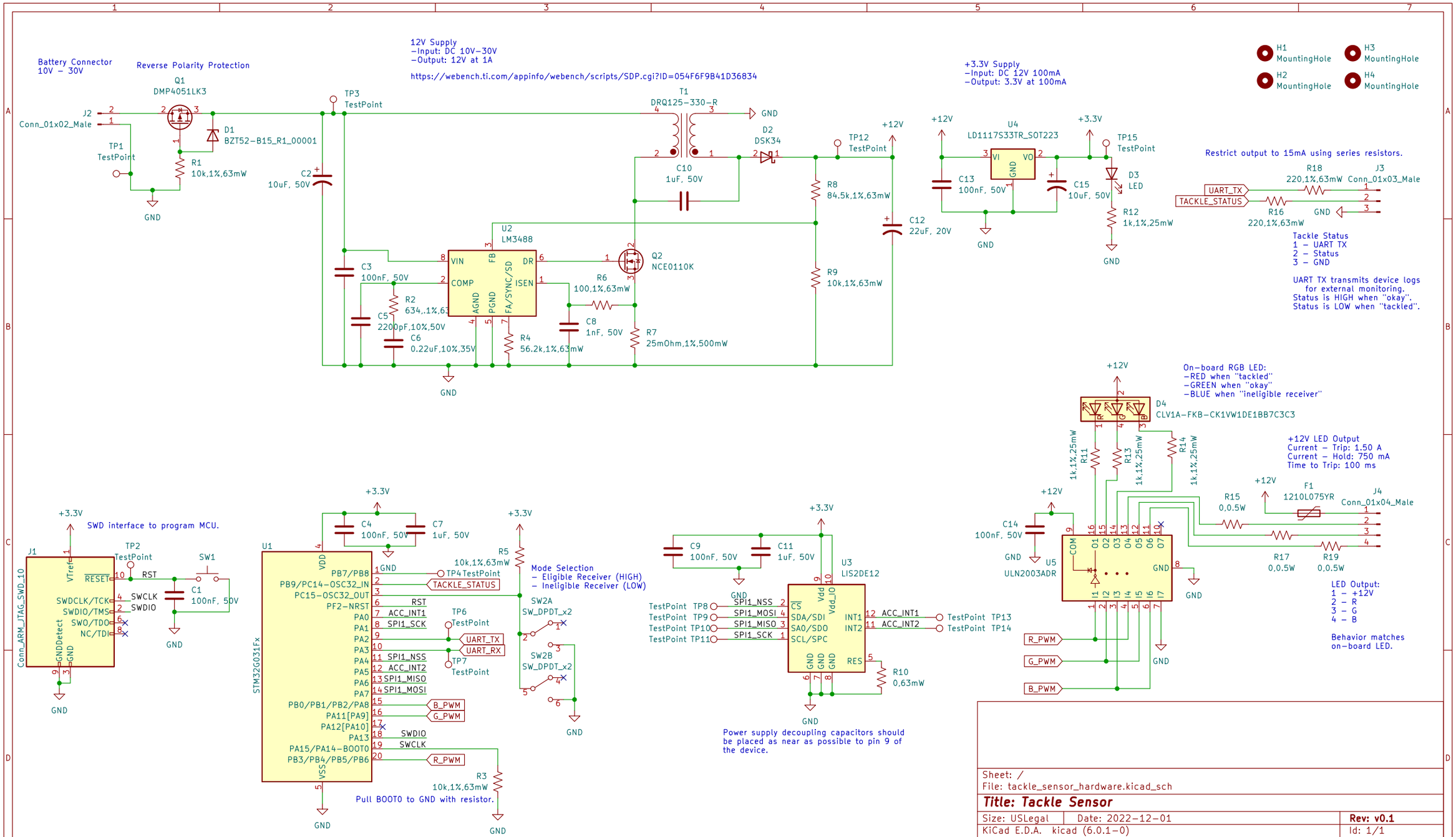

Sheet: /
File: tackle_sensor_hardware.kicad_sch

Title: Tackle Sensor

Size: USLegal	Date: 2022-12-01	**Rev: v0.1**
KiCad E.D.A. kicad (6.0.1-0)		Id: 1/1