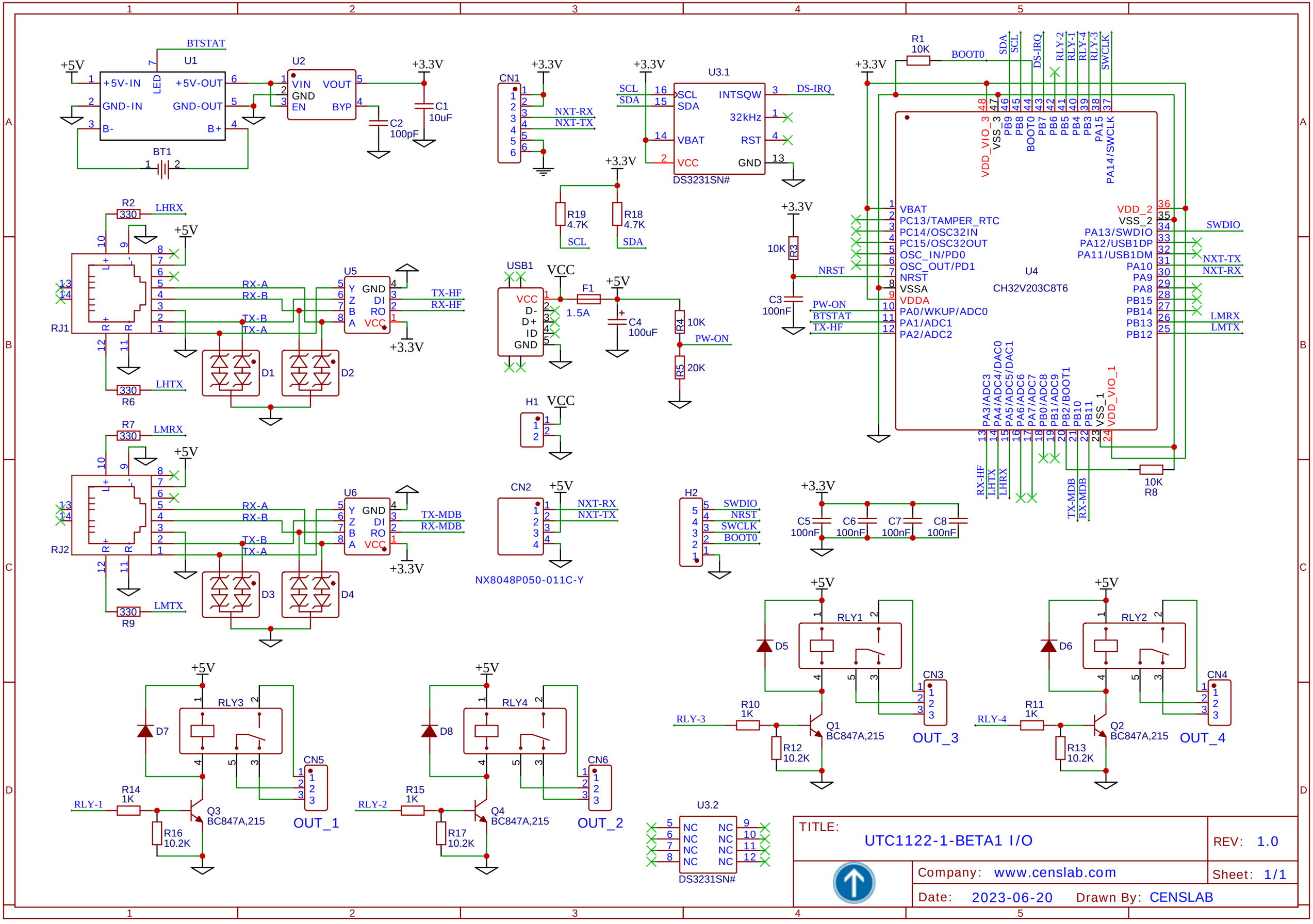
U1
+5V-IN
GND-IN
B-
LED
+5V-OUT
GND-OUT
B+
BTSTAT
BT1
U2
VIN
GND
EN
VOUT
BYP
+3.3V
C1
10uF
C2
100pF
CN1
NXT-RX
NXT-TX
U3.1
SCL
SDA
INTSQW
32kHz
RST
VBAT
VCC
GND
DS3231SN#
DS-IRQ
R19
4.7K
R18
4.7K
R1
10K
BOOT0
R3
10K
C3
100nF
NRST
U4
CH32V203C8T6
VBAT
PC13/TAMPER_RTC
PC14/OSC32IN
PC15/OSC32OUT
OSC_IN/PD0
OSC_OUT/PD1
NRST
VSSA
VDDA
PA0/WKUP/ADC0
PA1/ADC1
PA2/ADC2
PA13/SWDIO
PA12/USB1DP
PA11/USB1DM
PA10
PA9
PA8
PB15
PB14
PB13
PB12
SWDIO
NXT-TX
NXT-RX
LMRX
LMTX
PW-ON
BTSTAT
TX-HF
R2
330
LHRX
R6
330
LHTX
RJ1
U5
RX-A
RX-B
TX-B
TX-A
TX-HF
RX-HF
D1
D2
R7
330
LMRX
R9
330
LMTX
RJ2
U6
TX-MDB
RX-MDB
D3
D4
USB1
VCC
D-
D+
ID
GND
F1
1.5A
C4
100uF
R4
10K
R5
20K
H1
CN2
NX8048P050-011C-Y
H2
SWDIO
NRST
SWCLK
BOOT0
C5
100nF
C6
100nF
C7
100nF
C8
100nF
R8
10K
RLY1
RLY2
D5
D6
R10
1K
R11
1K
RLY-3
RLY-4
Q1
BC847A,215
Q2
BC847A,215
R12
10.2K
R13
10.2K
CN3
CN4
OUT_3
OUT_4
RLY3
RLY4
D7
D8
R14
1K
R15
1K
RLY-1
RLY-2
Q3
BC847A,215
Q4
BC847A,215
R16
10.2K
R17
10.2K
CN5
CN6
OUT_1
OUT_2
U3.2
NC
DS3231SN#
TITLE:
UTC1122-1-BETA1 I/O
REV: 1.0
Company: www.censlab.com
Sheet: 1/1
Date: 2023-06-20
Drawn By: CENSLAB