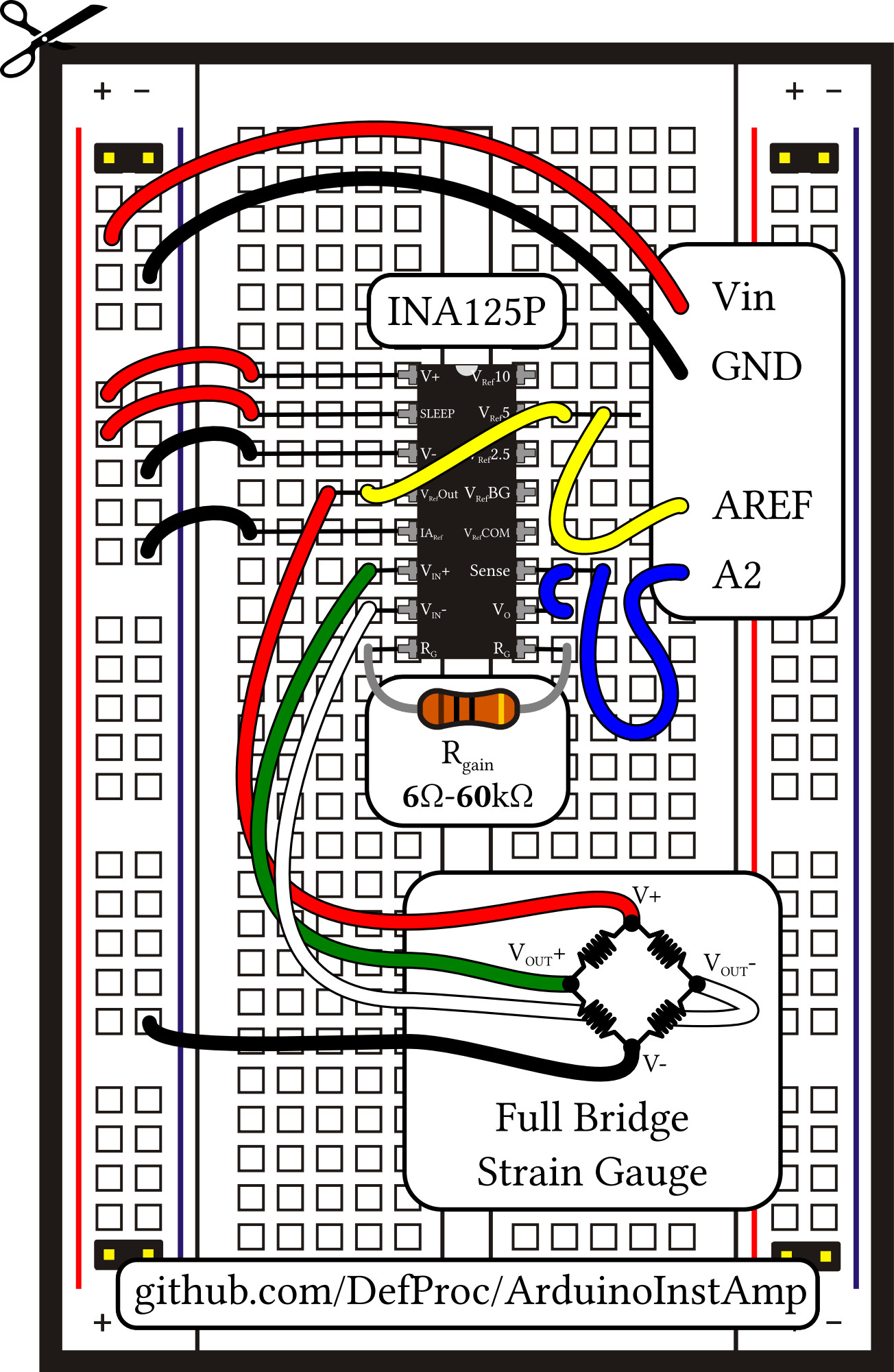
INA125P
V+
SLEEP
V-
VRefOut
IARef
VIN+
VIN-
RG
VRef10
VRef5
VRef2.5
VRefBG
VRefCOM
Sense
VO
RG
Vin
GND
AREF
A2
Rgain
6Ω-60kΩ
V+
VOUT+
VOUT-
V-
Full Bridge
Strain Gauge
github.com/DefProc/ArduinoInstAmp