Direct replication attempt to evaluate a claim from Popper_LeadQuart_2009_aYyR

Replication team: Janaki Gooty, Ph.D. and Amanda Sargent, M.A.

SCORE RR ID: 23w12

OSF Project: https://osf.io/7k8sy

Description of generalizability

The original study was conducted with Israeli active-duty male military members. This replication deviates from the original in that we will use U.S. males with military experience (active duty or veteran).

In our preregistration, we acknowledged that certain differences in the original study's sample and our proposed sample may result in different observations of effects. For example, we noted how it would be possible the effect size between openness to experience and leadership experiences will be larger in the American population due to selection effects related to the voluntary nature of American military service (Israeli military service is compulsory). Thus, higher baseline levels of early life leadership experiences may be present for the American sample compared to the Israeli sample, possibly resulting in a stronger observed relationship (i.e., greater than $\beta = .34$). This was not the case, however, as the effect size we found (unstandardized $b = 0.164$; standardized $\beta = .247$; $p = .001$) was similar to the coefficient found in the original study (both effects were medium in magnitude and positive in direction). We have no reason based on our results to believe the difference in sample populations meaningfully influenced our findings based on our results.

Claim evaluation

Single-trace claim

Coded claim 4 text (original paper): "The findings also supported the next hypothesis, H4: a positive relation would be found between openness to experiences and leadership experiences. A significant ($p < .01$) positive relation was indeed found here (beta = .34)."

Replication outcome: Simple test

Inferential criteria: For this study, Model 1 was retained as the best fitting model from the Popper & Amit original study and the effect size generated for H4 was $\beta = .34$. Thus successful replication should be represented by a statistically significant positive beta coefficient for the relationship between openness to experience and leader experiences.

Result: The replication included 215 participants in the final analytic sample. Following Popper & Amit's procedure, we first tested a measurement model using confirmatory factor

analysis with maximum likelihood techniques and parceling procedures (three parcels per measure) for the proposed relationships (Popper & Amit's "Figure 2" on page 753 of the original manuscript). The measurement model overall fit the data well (X^2 = 95.651; p = .000 – two tailed; CFI = .973; TLI = .963; RMSEA = .068, p = .069 – two tailed; SRMR = .056), though RMSEA was not significant. All items loaded on to the expected factors with standardized loadings ranging from .41 to .98. We also ran an alternative measurement model with all parcels loading onto one factor, but this data did not fit the data well (X^2 = 847.285; p = .000 – two tailed; CFI = .549; TLI = .449; RMSEA = .261, p = .000 – two tailed; SRMR = .204). Thus, we went forward with the SEM analyses specified in Popper & Amit using all four original variables as measured.

We ran Popper & Amit's originally proposed model ("Figure 2"; Popper & Amit, 2009; p.753), and their six alternative models using structural equation modeling with maximum likelihood techniques and item parceling procedures (three parcels per measure) to examine relationships among the study variables. Testing Popper & Amit's originally proposed (and retained) model, we found a significant positive relationship between openness to experience and leadership experiences (unstandardized b = 0.164 ; standardized β = .247, p = .001, two tailed). This model fit the data well according to commonly referenced fit indices (X^2 = 103.959, p = .000 – two tailed; CFI = .969; TLI = .96; RMSEA = .071, p = .039 – two tailed; SRMR = .071; ECVI = .744). See Figure 1 below for a visual representation of the replicated original model. Next, we ran the six alternative models tested by Popper & Amit in the original paper, the results of which are consistent with analyses from the original paper. Model 1 was retained as the best-fitting model compared to alternative models where all proposed relationships returned significant standardized beta coefficients at the $p < .05$ level (refer to document file "Popper & Amit Replication Results" to view all standardized and unstandardized model coefficients) . We conclude the specified result (a positive relationship between openness to experience and leadership experience) replicated based on the SCORE replication criteria given the beta coefficient from the retained model (see Figure 1) was positive and statistically significant at p = .001.

Figure 1

Replication of Popper & Amit's (2009) Model 1, the retained model

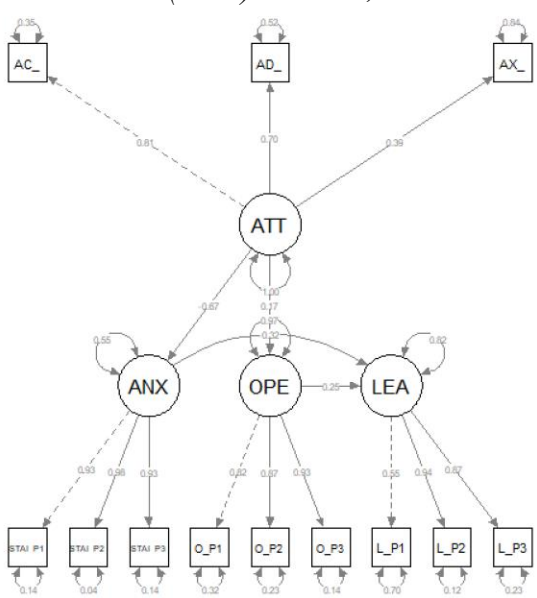

Note. n = 215.

Deviations from the preregistration: In our original OSF preregistration, a sample size of 671 was specified as the target given a power analysis by SCORE. Once the study reached the stage of data collection, the number of available participants on the Prolific platform meeting inclusion criteria (men with U.S. military experience age 18 or older) had decreased significantly from the originally estimated available sample. Thus, we were unable to obtain the desired sample size, instead reaching a final sample of 215 after removing participants for failing to meet inclusion criteria, missing data, or failing manipulation checks. As a result, we also did not run the structural models including all items from all measures as originally proposed due to concerns that models with such large numbers of parameters would be severely underpowered. We thus used the same parceling procedure that Popper & Amit applied in the original study, creating three parcels per measure, and running the structural models with the parceled data only to maximize power. Given the difference between the desired sample size for adequate power and the final sample size, our results should be interpreted with caution.

In the original R code provided in our pre-registration, we did not include the code for running scale reliabilities, so this code was added in the final version of the R code. The names of data files changed in the final version of the R code to reflect the names of our data files. We also added code to test a seventh SEM model that was not pictured in the original Popper & Amit study, but was verbally described as the sixth model tested (described on page 757 of the original manuscript). "Model 6" in Popper & Amit (2009) is actually a seventh and final model tested, though it is labeled as "Model 6" in the paper (p.761). We also added a line of code for each model that allowed us to create visual representations of each structural model.

No other deviations to report.

Description of materials provided

References

1. "Study Instrument_Popper & Amit Replication" is the final survey instrument we used for our participants, which includes the consent page and shows how each item was numerically coded from the choice text.
2. "SCORE_Popper-Amit Replication_RAW TEXT CHOICE DATA" is the raw data as downloaded from Qualtrics with original choice text. The only change we made before uploading to OSF was to delete identifying/personal information (e.g. Prolific ID, start date).
3. "SCORE_Popper-Amit Replication_RAW NUMERIC DATA" is the raw data as downloaded from Qualtrics with the numeric representation of choices prior

to recoding procedures or data cleaning. The only change we made before uploading to OSF was to delete identifying/personal information (e.g. Prolific ID, start date).

4. "SCORE_Popper-Amit Replication_Data cleaning File" is the data file containing stepwise data cleaning. Each sheet in the workbook is titled with the data cleaning step completed, with participants identified for removal highlighted on each sheet.
5. "Popper_Data cleaning steps" is a text file with descriptions of each data cleaning step and the number of participants removed per step
6. "Popper_Parcel Assignment and construction" is a workbook demonstrating how scale parcels were randomly assigned and calculated for Trait Anxiety, Openness to Experience, and Leadership Experiences (Attachment parcels were created to reflect the three subscales of Avoidance – Closeness, Avoidance – Dependence, and Attachment Anxiety).
7. "Popper_Data for CFA and SEM" is the data file used to run CFA and SEM analyses.
8. "Final R Code for Popper & Amit Replication_2022" is a copy of the code used in R for analyses.
9. "Popper Data for Correlations" is the data file containing scale composite scores for all variables used to run correlations among study variables.
10. "Popper & Amit Replication Results" is a Word document containing the study's correlation table with measure reliabilities, CFA results, and SEM results including original R output.

All files are public

Instructions: Popper, M., & Amit, K. (2009). Attachment and leader's development via experiences. *The Leadership Quarterly*, *20*(5), 749-763. doi:10.1016/j.leaqua.2009.06.005