NTIRE2026 – Nighttime Image Dehazing Challenge Factsheet

KLETech-CEVI
Tejas R R Shet[1,3], Nikhil Akalwadi[1,3], Ramesh Ashok Tabib[2,3], Uma Mudenagudi[2,3]*
{01fe22bcs231, nikhil.akalwadi, ramesh_t, uma}@kletech.ac.in

March 17, 2026

1 Team details

- **Team name:** KLETech-CEVI
- **Team leader name:** Nikhil Akalwadi
- **Team leader institution and email:**
  Center for Visual Intelligence,
  KLE Technological University, Hubballi
  (nikhil.akalwadi@kletech.ac.in)
- **Rest of the team members**:
  - Tejas R R Shet[1,3]
  - Ramesh Ashok Tabib[2,3]
  - Uma Mudenagudi[2,3]
- **Team website URL (if any):** https://cevi.co.in/
- **Affiliations:**
  [1]School of Computer Science and Engineering
  [2]Department of Electronics and Communication Engineering
  [3]Center for Visual Intelligence (CEVI)
  KLE Technological University, Hubballi, Karnataka, INDIA
- **Affiliation with NTIRE 2026 sponsors:** N/A
- **Usernames on the NTIRE2026-Nighttime Image Dehazing Challenge CodaBench leaderboard (development/validation and testing phases):** anakin
- **Best scoring entries during development/validation phase:** PSNR: 20.785 dB, SSIM: 0.675
- **Link to the codes/executables of the solution(s):** NighttimeDehazing Github Link
- **Link to the enhancement results:** Google Drive Link

*[1]School of Computer Science and Engineering, KLE Technological University [2]Department of Electronics and Communication Engineering, KLE Technological University [3]Center for Visual Intelligence (CEVI), KLE Technological University

2 Contribution details

- **Title of the contribution:** NightDehazeNet: Multi-Scale Attention U-Net with Curriculum Learning for Nighttime Image Dehazing
- **General method description:** We propose NightDehazeNet, a Restormer-inspired [3] multi-scale attention U-Net trained via a 3-stage curriculum (synthetic pretraining → domain adaptation → NTIRE refinement). The architecture combines transposed self-attention, gated skip fusion, SE channel attention [5], CBAM spatial attention [4], and multi-scale dilated context blocks. A composite loss (Charbonnier + SSIM + VGG Perceptual + FFT Frequency + Color Consistency) ensures pixel fidelity, structural preservation, and nighttime color consistency.
- **Have you tested previously published methods?** No.
- **Do you use extra data besides the competition data provided?** Yes.
  - **RESIDE ITS + SOTS** [2]: ∼13,990 indoor/outdoor haze pairs used for Stage 1 synthetic pretraining with nightfall augmentation.
  - **NH-Haze** [6]: 55 real non-homogeneous haze pairs used in Stage 2 domain adaptation.
  - **GTA5 Nighttime** [1]: 864 synthetic nighttime haze pairs from the RealNightHaze dataset.
- **Other methods and baselines tested:**
  - Direct Stage 3 training without curriculum (no Stage 1/2): resulted in severe overfitting to the 25 NTIRE images with poor generalization.
  - Single-stage training on RESIDE only: achieved ∼16 dB PSNR on NTIRE validation, confirming the need for domain adaptation.

3 Global Method Description

Training Strategy: 3-Stage Curriculum

We employ a progressive 3-stage curriculum training strategy to bridge the domain gap between synthetic and real nighttime haze:

1. **Stage 1 – Synthetic Pretraining:** The model is pretrained on the RESIDE dataset [2] (ITS indoor training set + SOTS outdoor testing set, ∼13,990 pairs) with synthetic nightfall augmentation to simulate nighttime conditions. The nightfall augmentation darkens daytime images, applies random gamma correction ($\gamma \in [2.0, 4.0]$), sodium vapor tinting, localized glow simulation around bright regions, and Poisson shot noise to simulate high-ISO nighttime camera characteristics. Training uses patch size 256, batch size 16, learning rate 2×10^{-4}, AdamW optimizer ($\beta_1 = 0.9$, $\beta_2 = 0.999$, weight decay 10^{-3}), and cosine annealing with warmup. Stage 1 runs for 5 epochs (∼25 hours).
2. **Stage 2 – Domain Adaptation:** The pretrained model is fine-tuned on a combination of NH-Haze [6] (55 real haze pairs) and GTA5 Nighttime synthetic data (864 synthetic pairs, sourced from [1]). This bridges the color/brightness domain gap between synthetic and real nighttime imaging conditions. The first 2 encoder layers are frozen. Training uses patch size 256, batch size 4, learning rate 10^{-4}, repeat factor 20.

3. **Stage 3 – NTIRE Refinement:** The domain-adapted model is fine-tuned on all 25 NTIRE-provided paired training images. The first 4 encoder layers are frozen to preserve learned features. An Exponential Moving Average (EMA) with decay 0.9995 is maintained and used for validation and final inference. Training uses patch size 320, batch size 2, learning rate 2×10^{-5}, repeat factor 30.

All stages use mixed-precision training (BF16) and gradient clipping at 1.0. Data augmentation includes random horizontal/vertical flips, random 90 rotations, MixUp ($\alpha = 0.7$), CutMix (probability 0.3), random gamma, brightness/contrast jitter, and color jitter.

3.1 Method details

Our proposed method, **NightDehazeNet**, is a Multi-Scale Attention U-Net architecture designed specifically for nighttime image dehazing. The network employs Restormer-style [3] transposed self-attention, gated depthwise-convolution feed-forward networks, and multi-scale context blocks with dilated convolutions to capture haze patterns across varying spatial scales. The architecture includes four key attention mechanisms: (1) SE-style channel attention [5] for inter-channel feature recalibration, (2) CBAM-style spatial attention [4] for region-specific haze density estimation, (3) multi-head transposed attention [3] for global context aggregation, and (4) gated skip fusion for clean residual propagation across the encoder-decoder hierarchy. An optional auxiliary illumination estimation head provides additional supervisory signal for nighttime conditions.

Architecture Overview

The network follows a 4-level U-Net encoder-decoder structure with block counts $[4, 6, 6, 8]$ and attention head counts $[1, 2, 4, 8]$. The base feature dimension is 48. Each level consists of stacked Transformer blocks:

$$\mathbf{x} \to \text{LN} \to \text{TransposedAttn} \to + \to \text{LN} \to \text{GatedFFN} \to \text{CA} \to \text{SA} \to +$$

Downsampling is performed via strided 4×4 convolutions (stride 2), and upsampling uses PixelShuffle with 2×2 convolutions. Gated skip connections fuse encoder and decoder features via a learned gating mechanism:

$$\mathbf{f}_{\text{fused}} = \sigma(\text{Conv}(\text{Cat}(\mathbf{f}_{\text{enc}}, \mathbf{f}_{\text{dec}}))) \odot \text{Conv}(\text{Cat}(\mathbf{f}_{\text{enc}}, \mathbf{f}_{\text{dec}}))$$

Multi-scale context blocks employ parallel dilated convolutions at rates $\{1, 2, 4\}$ to capture haze at different spatial frequencies. Global residual learning adds the input directly to the output to stabilize training.

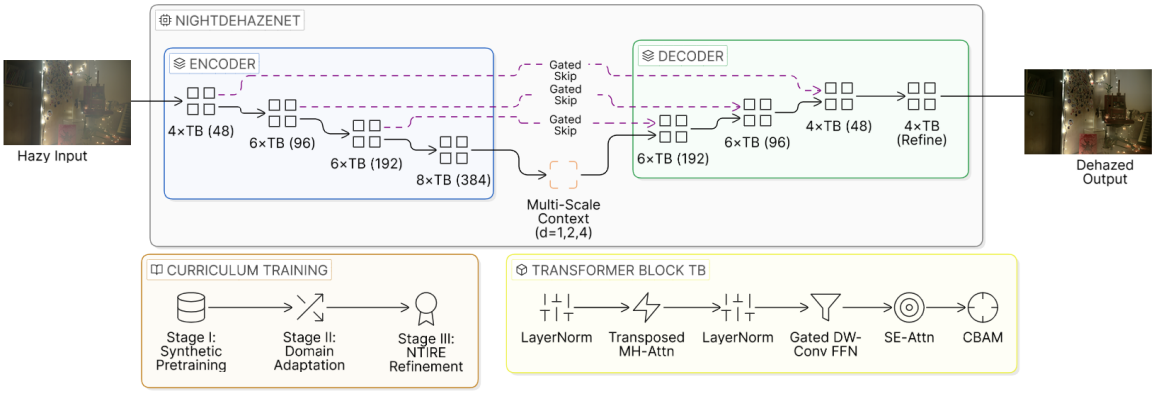

Figure 1: Overview of the proposed NightDehazeNet architecture. The encoder (blue) extracts multi-scale features via stacked Transformer Blocks (TB), which are fused with decoder (green) features through Gated Skip Connections. The Multi-Scale Context block captures haze patterns at multiple spatial frequencies. Bottom-left: the 3-stage curriculum training strategy. Bottom-right: internal structure of each Transformer Block.

Loss Function

We use a composite loss function combining five complementary objectives:

$$\mathcal{L}_{\text{total}} = \omega_1 \mathcal{L}_{\text{Charb}} + \omega_2 \mathcal{L}_{\text{SSIM}} + \omega_3 \mathcal{L}_{\text{VGG}} + \omega_4 \mathcal{L}_{\text{FFT}} + \omega_5 \mathcal{L}_{\text{Color}}$$

- **Charbonnier Loss** ($\omega_1 = 1.0$): Robust pixel-level reconstruction loss, $\mathcal{L}_{\text{Charb}} = \sqrt{(\hat{y} - y)^2 + \epsilon^2}$, with $\epsilon = 10^{-3}$.
- **SSIM Loss** ($\omega_2 = 0.05$): Structural similarity loss to preserve edges and textures, computed as $1 - \text{SSIM}(\hat{y}, y)$.
- **VGG Perceptual Loss** ($\omega_3 = 0.01$): Multi-layer feature matching using VGG-19 features from layers relu1_2, relu2_2, relu3_4, and relu4_4.
- **FFT Frequency Loss** ($\omega_4 = 0.1$): Fourier domain loss that penalizes high-frequency reconstruction errors in the spectral domain.
- **Color Consistency Loss** ($\omega_5 = 0.05$): Channel-wise mean and variance alignment to prevent nighttime color shifts.

Inference

At test time, we employ **Seamless Tiled Inference** with tile size 512 and overlap 160 pixels. Overlapping regions are blended using a 2D Gaussian weighting kernel to prevent visible seams. We additionally use **self-ensemble** (8 geometric transforms: identity, horizontal flip, vertical flip, both flips, and corresponding 90-rotated variants), averaging all 8 predictions for the final output.

Input	Training Time	Epochs	Extra data	Diffusion	Attention	Quantization	# Params. (M)	Runtime	GPU
(1440, 1920, 3)	∼34h	5+15+50	Yes	No	Yes	No	24.03M	∼30s/img	RTX 3090

Table 1: Technical details of NightDehazeNet.

Technical Summary

- **Total method complexity:** 24.03M parameters across all stages (single model, no stage-specific architecture changes).
- **Pre-trained or external models used:** VGG-19 (pretrained on ImageNet) for perceptual loss computation only; not used in the main network.
- **Additional data used:**
  - RESIDE ITS + SOTS [2] (indoor + outdoor, ∼13,990 pairs) for Stage 1 pretraining
  - NH-Haze [6] (55 real haze pairs) for Stage 2 domain adaptation
  - GTA5 Nighttime (864 synthetic nighttime pairs) from [1] for Stage 2
- **Quantitative advantages:** The 3-stage curriculum progressively narrows the domain gap, enabling effective transfer from large-scale synthetic data to the small real NTIRE training set. The multi-component loss function balances pixel fidelity, structural preservation, perceptual quality, spectral accuracy, and color consistency.
- **Novelty:** The combination of nightfall augmentation, composite multi-domain loss for preventing nighttime color shifts, and seamless tiled inference with Gaussian blending for high-resolution dehazing. The solution has not been previously published.

4 Competition particularities

The primary challenge in nighttime image dehazing compared to daytime dehazing is the severe domain gap between available training data and the target nighttime conditions. Most existing dehazing datasets (RESIDE, NH-Haze) contain daytime images. We address this through our nightfall augmentation pipeline, which simulates realistic nighttime conditions including non-uniform illumination, sodium vapor lamp tinting, lens glow around light sources, and sensor noise.

5 Technical details

- **Language:** Python 3.10
- **Framework:** PyTorch 2.x + PyTorch Lightning
- **Optimizer:** AdamW ($\beta_1 = 0.9, \beta_2 = 0.999$, weight decay $= 10^{-3}$)
- **Learning rate schedule:** Cosine annealing with linear warmup (15 epochs warmup, $\eta_{\min} = 10^{-6}$)
- **GPU:** Single NVIDIA RTX 3090 (24 GB VRAM)
- **Total training time:** ∼34 hours across all 3 stages

- **Augmentation:** Albumentations library for geometric transforms and custom nightfall
- **Mixed precision:** BF16/FP16 automatic mixed precision
- **EMA:** Exponential Moving Average with decay 0.9995, swapped in during validation
- **Gradient accumulation:** 2 steps (effective batch size doubled in Stages 2 and 3)

6 Other details

- **Planned submission of a solution description paper at NTIRE 2026 workshop:** NO
- **General comments:** The challenge dataset is well-curated and representative of real-world nighttime dehazing scenarios. The limited number of paired training images (25) makes this a challenging few-shot learning problem, necessitating creative data augmentation and curriculum learning strategies.
- **Suggestions for future challenges:** Providing a larger paired training set or explicit domain metadata (indoor/outdoor, lighting conditions) would enable more targeted solutions.

References

[1] J. Jin, W. Gao, Y. Yang, and G. Zhai, "Enhancing Visibility in Nighttime Haze Images Using Guided APSF and Gradient Adaptive Convolution," in *Proc. ACM International Conference on Multimedia (ACM MM)*, 2023.

[2] B. Li, W. Ren, D. Fu, D. Tao, D. Feng, W. Zeng, and Z. Wang, "Benchmarking Single-Image Dehazing and Beyond," *IEEE Transactions on Image Processing*, vol. 28, no. 1, pp. 492–505, 2019.

[3] S. W. Zamir, A. Arora, S. Khan, M. Hayat, F. S. Khan, and M.-H. Yang, "Restormer: Efficient Transformer for High-Resolution Image Restoration," in *Proc. IEEE/CVF Conference on Computer Vision and Pattern Recognition (CVPR)*, 2022.

[4] S. Woo, J. Park, J.-Y. Lee, and I. S. Kweon, "CBAM: Convolutional Block Attention Module," in *Proc. European Conference on Computer Vision (ECCV)*, 2018.

[5] J. Hu, L. Shen, and G. Sun, "Squeeze-and-Excitation Networks," in *Proc. IEEE/CVF Conference on Computer Vision and Pattern Recognition (CVPR)*, 2018.

[6] C. O. Ancuti, C. Ancuti, and R. Timofte, "NH-HAZE: An Image Dehazing Benchmark with Non-Homogeneous Hazy and Haze-Free Images," in *Proc. IEEE/CVF Conference on Computer Vision and Pattern Recognition Workshops (CVPRW)*, 2020.