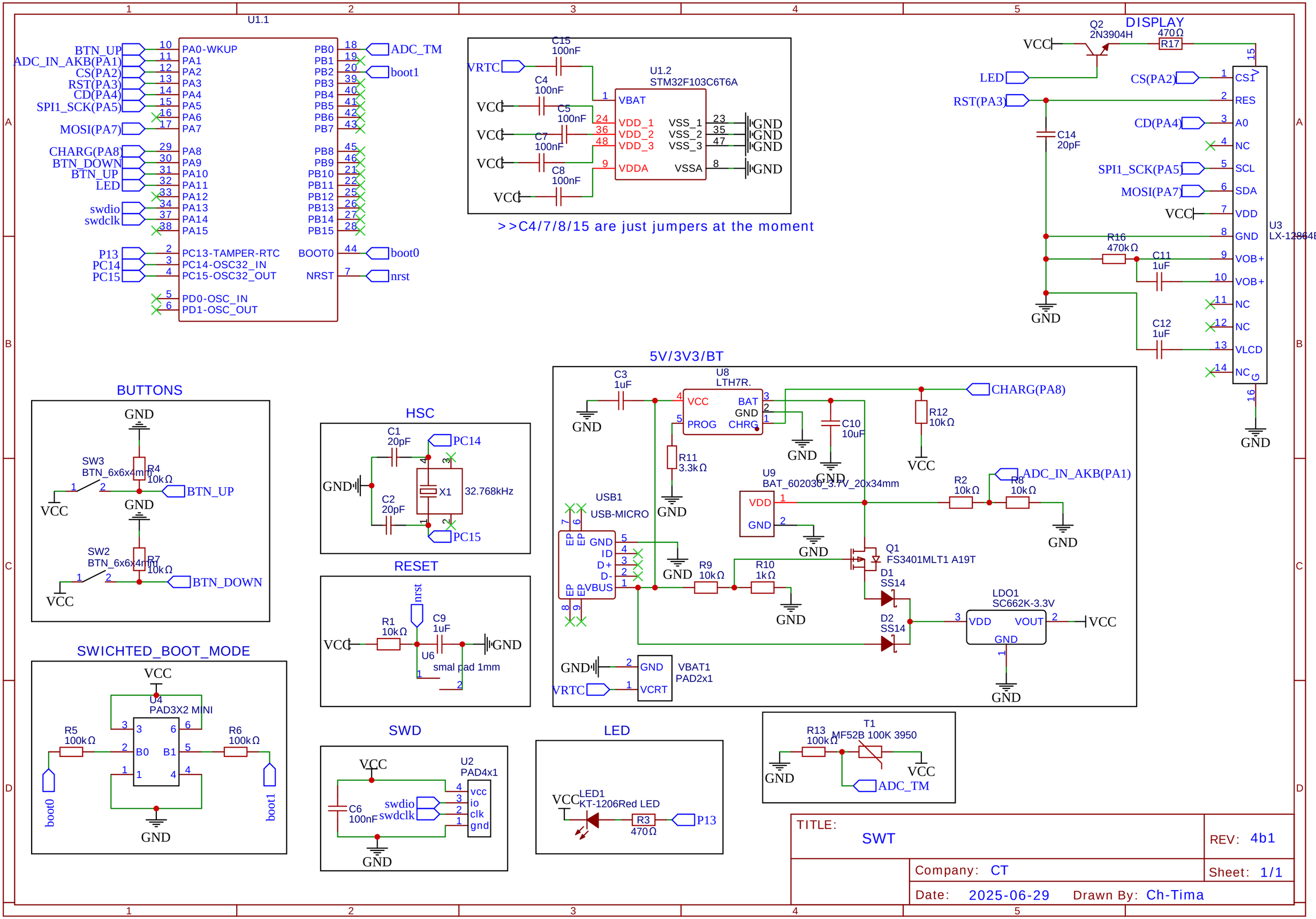
STM32F103C6T6A
U1.1
BTN_UP
ADC_IN_AKB(PA1)
CS(PA2)
RST(PA3)
CD(PA4)
SPI1_SCK(PA5)
MOSI(PA7)
CHARG(PA8)
BTN_DOWN
BTN_UP
LED
swdio
swdclk
P13
PC14
PC15
PA0-WKUP
PA1
PA2
PA3
PA4
PA5
PA6
PA7
PA8
PA9
PA10
PA11
PA12
PA13
PA14
PA15
PC13-TAMPER-RTC
PC14-OSC32_IN
PC15-OSC32_OUT
PD0-OSC_IN
PD1-OSC_OUT
PB0
PB1
PB2
PB3
PB4
PB5
PB6
PB7
PB8
PB9
PB10
PB11
PB12
PB13
PB14
PB15
BOOT0
NRST
ADC_TM
boot1
boot0
nrst
VRTC
C15
100nF
C4
100nF
C5
100nF
C7
100nF
C8
100nF
VCC
U1.2
STM32F103C6T6A
VBAT
VDD_1
VDD_2
VDD_3
VDDA
VSS_1
VSS_2
VSS_3
VSSA
GND
>>C4/7/8/15 are just jumpers at the moment
DISPLAY
Q2
2N3904H
470Ω
R17
LED
RST(PA3)
CS(PA2)
CD(PA4)
SPI1_SCK(PA5)
MOSI(PA7)
C14
20pF
R16
470kΩ
C11
1uF
C12
1uF
CS1
RES
A0
NC
SCL
SDA
VDD
GND
VOB+
VOB+
NC
NC
VLCD
NC
U3
LX-12864B5-1-14P
BUTTONS
SW3
BTN_6x6x4mm
R4
10kΩ
BTN_UP
SW2
BTN_6x6x4mm
R7
10kΩ
BTN_DOWN
HSC
C1
20pF
C2
20pF
X1
32.768kHz
PC14
PC15
RESET
R1
10kΩ
C9
1uF
U6
smal pad 1mm
5V/3V3/BT
C3
1uF
U8
LTH7R.
VCC
PROG
BAT
GND
CHRG
R11
3.3kΩ
C10
10uF
R12
10kΩ
CHARG(PA8)
U9
BAT_602030_3.7V_20x34mm
VDD
R2
10kΩ
R8
10kΩ
ADC_IN_AKB(PA1)
USB1
USB-MICRO
EP
GND
ID
D+
D-
VBUS
R9
10kΩ
R10
1kΩ
Q1
FS3401MLT1 A19T
D1
SS14
D2
SS14
LDO1
SC662K-3.3V
VOUT
VBAT1
PAD2x1
VCRT
SWICHTED_BOOT_MODE
U4
PAD3X2 MINI
R5
100kΩ
R6
100kΩ
B0
B1
boot0
boot1
SWD
U2
PAD4x1
C6
100nF
swdio
swdclk
vcc
io
clk
gnd
LED
LED1
KT-1206Red LED
R3
470Ω
P13
R13
100kΩ
T1
MF52B 100K 3950
ADC_TM
TITLE:
SWT
REV: 4b1
Company: CT
Sheet: 1/1
Date: 2025-06-29
Drawn By: Ch-Tima