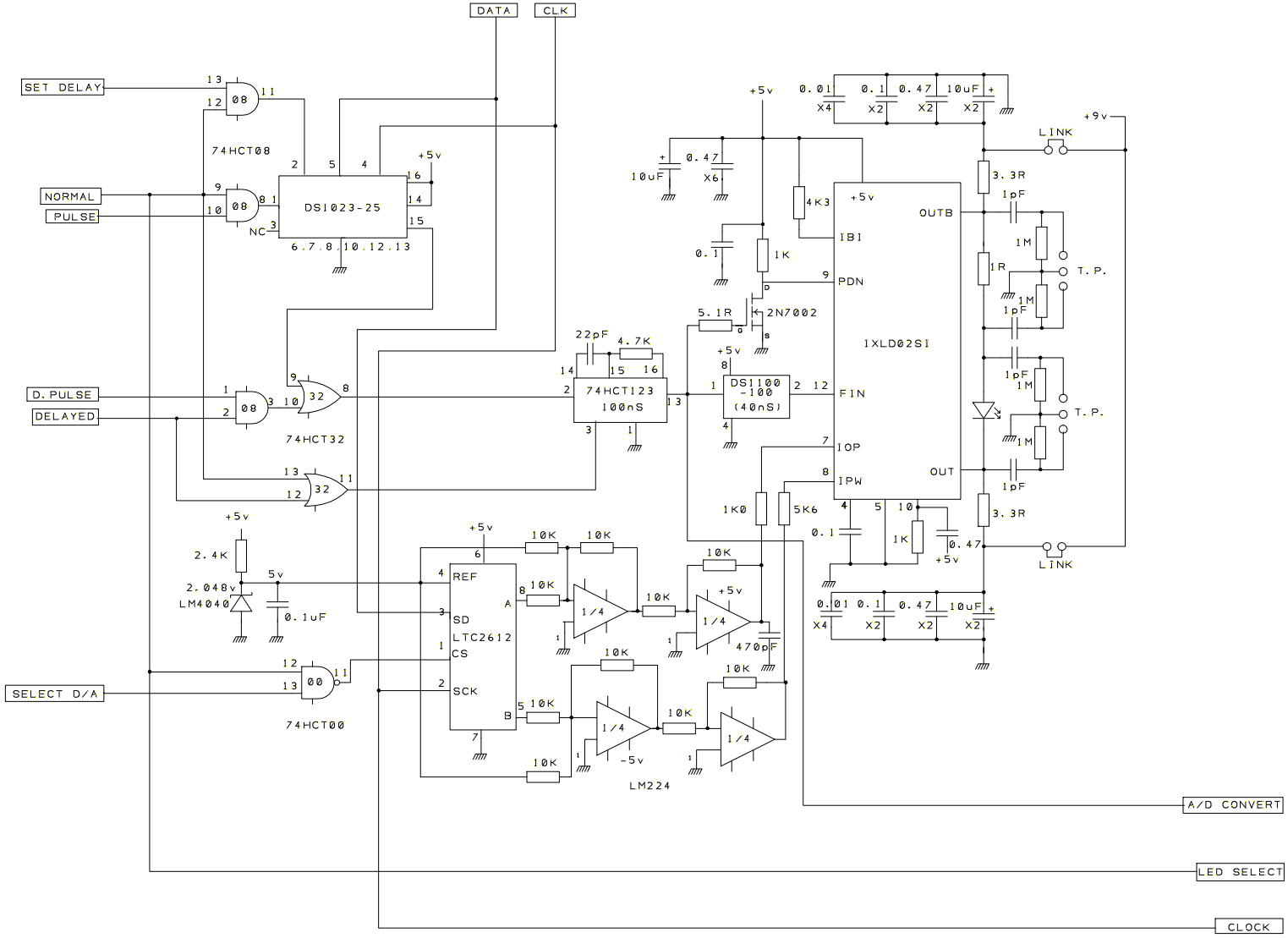

LED DRIVER BOARD

								Richard White University of Sussex 5/3/12
				Project SNO+		Unit LI PULSER BOX		
				Title LED DRIVER		Filename SNO_LEDdriver4.sch		Drawing No. 001