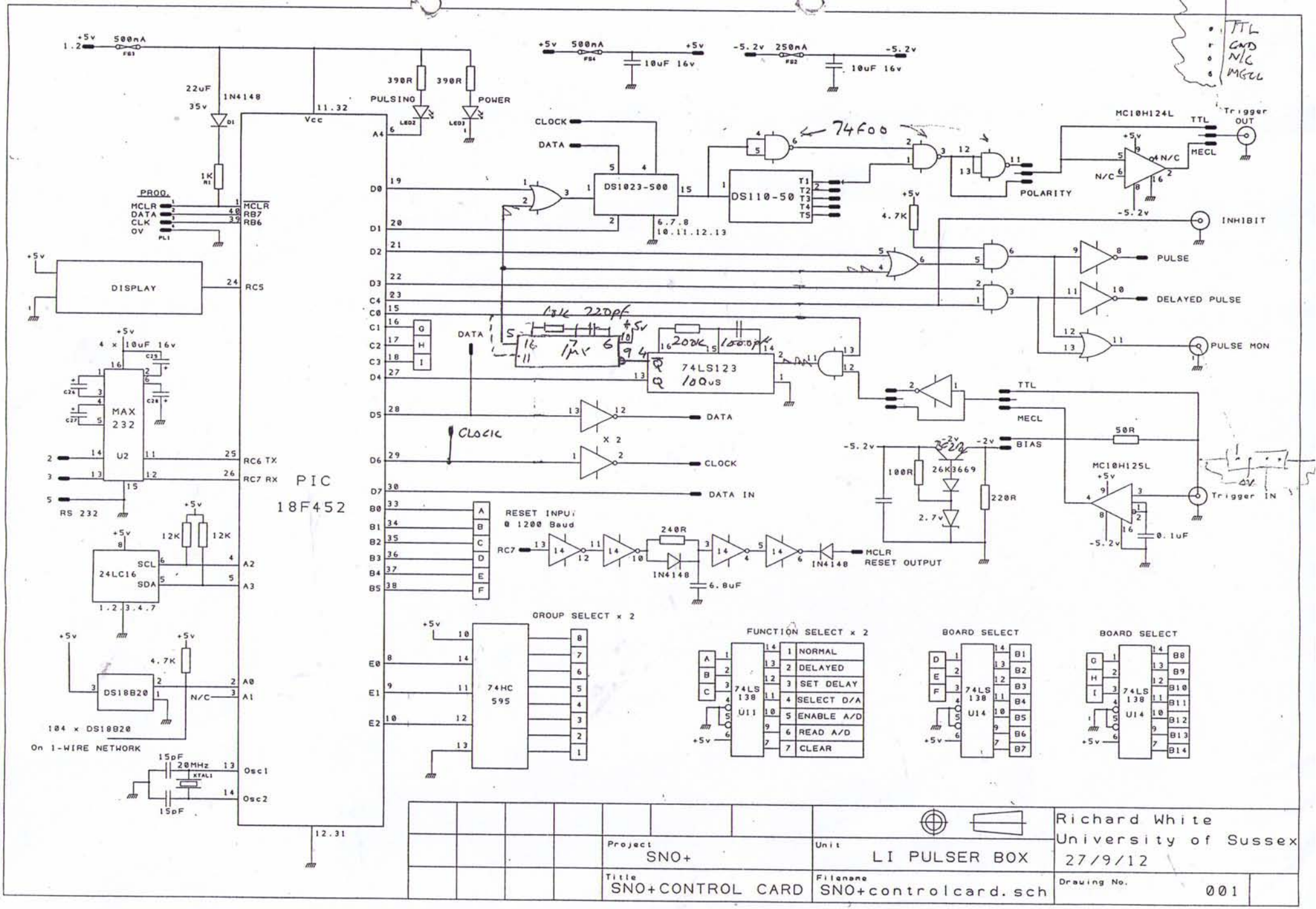
PIC
18F452
DISPLAY
MAX
232
U2
RS 232
24LC16
DS18B20
104 x DS18B20
On 1-WIRE NETWORK
PROG.
MCLR
DATA
CLK
0V
22uF
35v
1N4148
1K
390R
PULSING
POWER
Vcc
11.32
12.31
Osc1
Osc2
20MHz
15pF
12K
4.7K
RC5
RC6 TX
RC7 RX
CLOCK
DATA
DS1023-500
DS110-50
74LS123
100us
74HC
595
GROUP SELECT x 2
RESET INPUT
0 1200 Baud
240R
6.8uF
MCLR
RESET OUTPUT
DATA IN
X 2
74LS
138
U11
U14
FUNCTION SELECT x 2
NORMAL
DELAYED
SET DELAY
SELECT D/A
ENABLE A/D
READ A/D
CLEAR
BOARD SELECT
BOARD SELECT
74F00
POLARITY
MC10H124L
MC10H125L
Trigger OUT
INHIBIT
PULSE
DELAYED PULSE
PULSE MON
Trigger IN
TTL
MECL
BIAS
50R
100R
220R
26K
3669
2.7v
0.1uF
Richard White
University of Sussex
27/9/12
Project
SNO+
Unit
LI PULSER BOX
Title
SNO+CONTROL CARD
Filename
SNO+controlcard.sch
Drawing No.
001