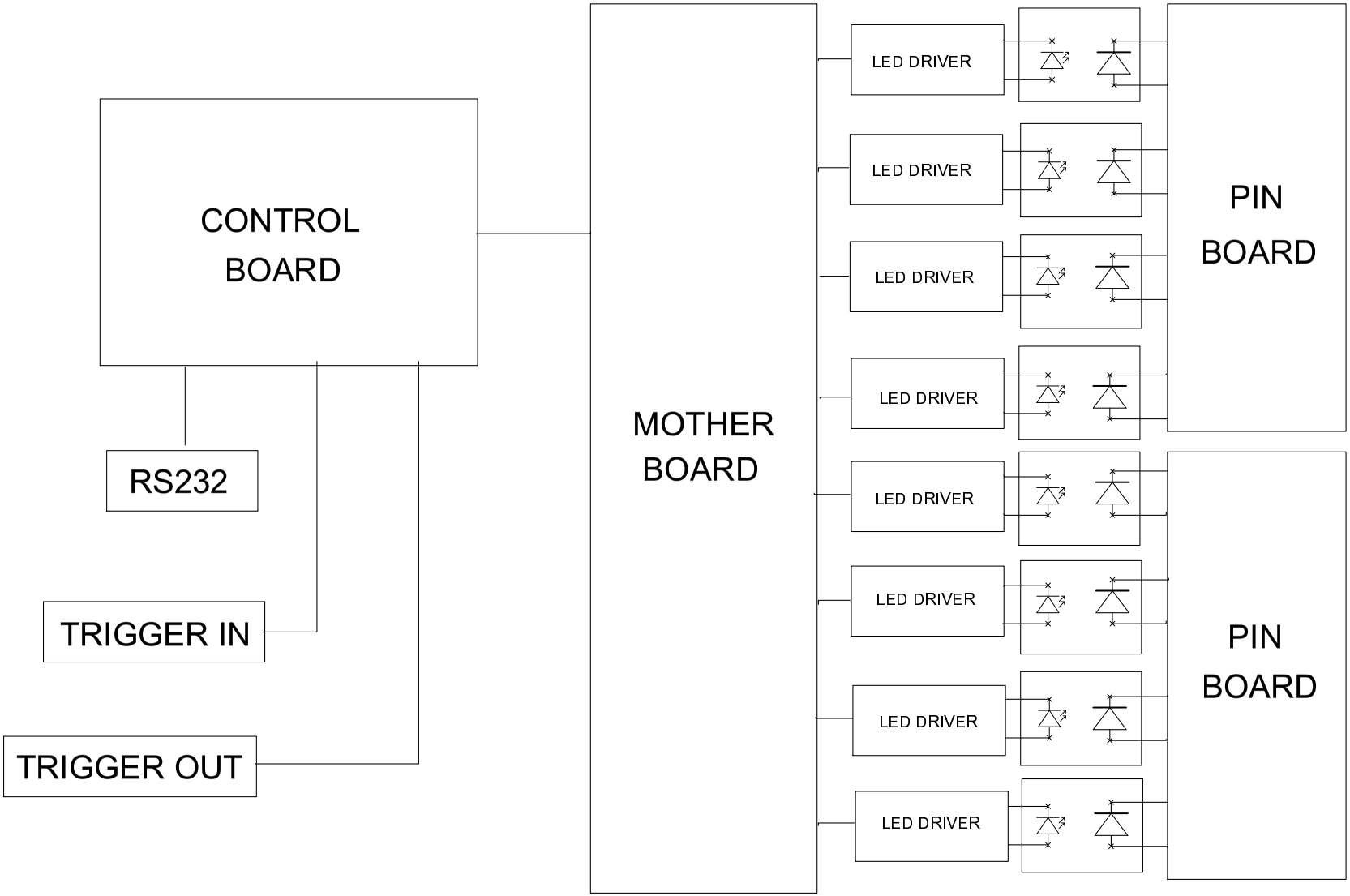

								Richard White
				Project SNO+		Unit		University of Sussex
				Title LIGHT INJECTION		Filename SYSTEM	Drawing No. 001	