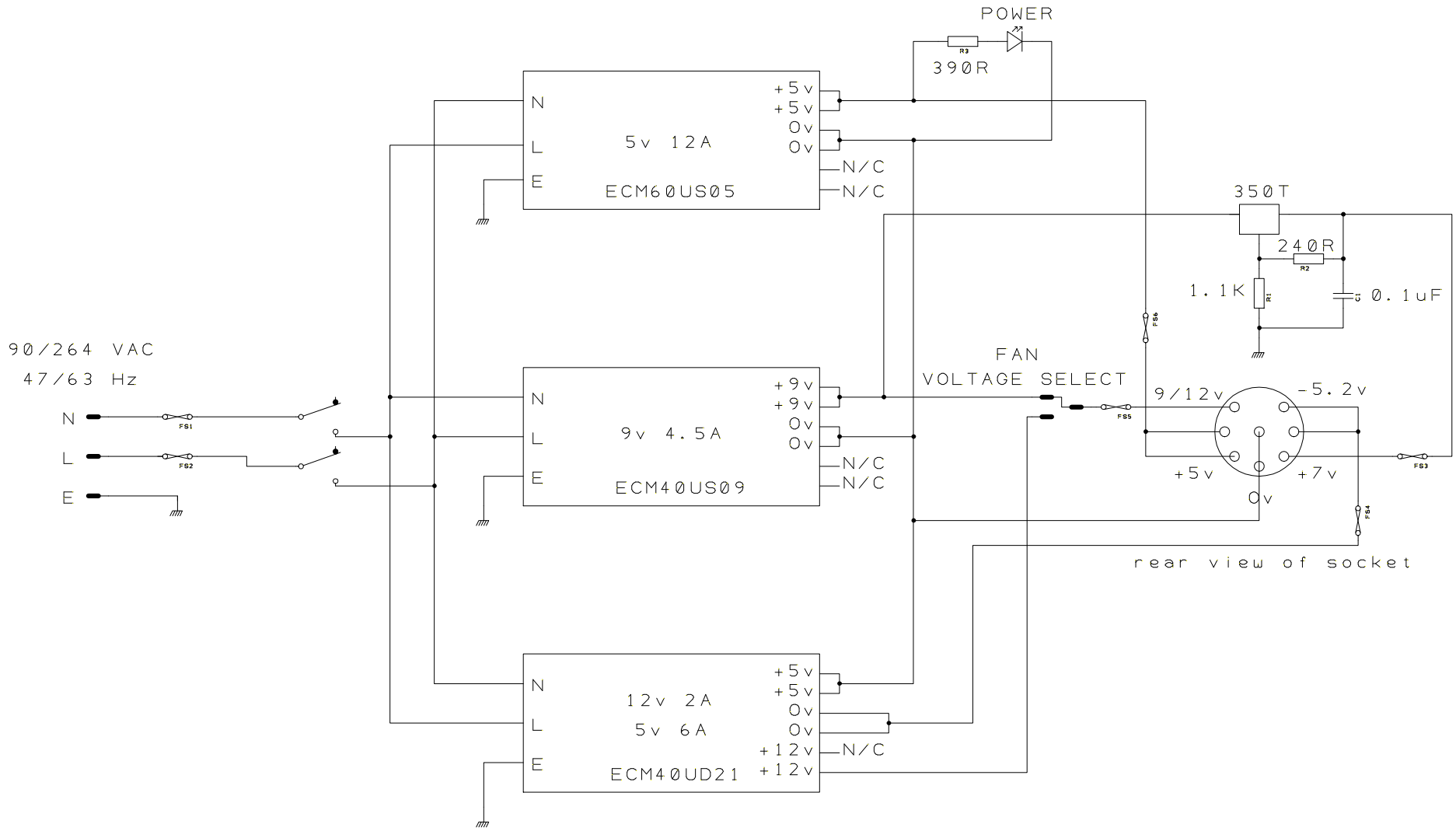

							RICHARD WHITE University of Sussex	
			SNO+	LIGHT INJECTION				
				POWER SUPPLY		SNO_PS.sch	20/03/13	001

QTL1
A3